PROJECT MANUAL

FOR

CONSTRUCT WEST APRON EXPANSION AND INFRASTRUCTURE

AT THE

DESTIN – FORT WALTON BEACH AIRPORT

FOR THE

OKALOOSA COUNTY, FLORIDA
BOARD OF COUNTY COMMISSIONERS

ITB AP 66-19

FAA AIP Project No. 3-12-0081-029-2018

100% Issued for Bids

May, 2019

PREPARED BY:

INFRASTRUCTURE
CONSULTING & ENGINEERING

5550 W. Idlewild Avenue, Suite 102
Tampa, Florida 33634
FL Certificate of Authorization No. 30862

TABLE OF CONTENTS

TITLE **PAGE**

FRONT END DOCUMENTS

Bid Information

Invitation to Bid (ITB) & Respondent's Acknowledgement ITB-1-2
Notice to Bidders NTB-1-2
Instructions to Contractors ITC-1-8
Okaloosa County Standard Clauses OCSC-1

Bid Forms

Bid Form BF-1
Bid Schedule BF-7
Bid Affidavit BF-11
Bid Bond BF-13
Performance of Work by Subcontractors BF-15
Contractor's Qualification Questionnaire BF-17
Resolution of Board of Directors BF-21
Form of Noncollusion Affidavit BF-23
Certification of Non-Segregated Facilities BF-25
Sworn Statement Under Section 287.133 (3) (a)
Florida Statutes on Public Entity Crimes BF-27
Certificate as to Corporate Principal BF-31
Conflict of Interest Disclosure Form BF-33
Drug-Free Workplace Certification BF-35
Certification Regarding Trench Safety BF-37
Indemnification and Hold Harmless BF-39
Insurance Compliance BF-41
Affidavit – Worker's Compensation BF-43
Recycled Content Form BF-45
Disadvantaged Business Enterprise Program BF-47
DBE Certificate of Compliance Form BF-51
DBE Statement of Good Faith Efforts BF-53
E-Verify Compliance Certification BF-59
Cone of Silence BF-61
Buy American Certificate BF-63
Lobbying – 31 U.S.C. 1352, 49 CFR Part 19, 49 CFR Part 20 ..... BF-65
Equal Employment Opportunity Report Statement BF-67

Contract Forms

Standard Form of Agreement SFA-1
Vendors on Scrutinized Companies List VSCL-1

TABLE OF CONTENTS

TITLE **PAGE**

General Provisions

Section 10 - Definition of Terms....GP-10-1
Section 20 - Proposal Requirements and Conditions ....OMITTED
Section 30 - Award and Execution of Contract....OMITTED
Section 40 - Scope of Work....GP-40-1
Section 50 - Control of Work....GP-50-1
Section 60 - Control of Materials....GP-60-1
Section 70 - Legal Relations and Responsibility to Public....GP-70-1
Section 80 - Execution and Progress....GP-80-1
Section 90 - Measurement and Payment....GP-90-1
Section 100 – Required Contract Provisions for Airport Improvement Program GP-100-1

TECHNICAL SPECIFICATIONS

Division 01 General Requirements

01010 – Summary of Work.... 01010-1
01030 – Airport Project Procedures 01030-1
01040 – Project Coordination 01040-1
01070 – Abbreviations and Symbols.... 01070-1
01090 – Regulations and Definitions 01090-1
01095 – NPDES Permit Compliance.... 01095-1
01150 – Measurement and Payment.... 01150-1
01210 - Allowances.... 01210-1
01300 - Submittals 01300-1
01400 – Quality Control Services 01400-1
01510 – Temporary Facilities 01510-1
01530 – Airfield Temporary Markings and Barricades.... 01530-1
01600 – Materials and Equipment.... 01600-1
01700 – Contract Closeout.... 01700-1
01710 – Cleaning and Disposal.... 01710-1
01720 – Project Record Document.... 01720-1
01740 – Warranties and Bonds 01740-1

General Construction Items

C-100 – Contractor Quality Control Program (CQCP) C-100-1
C-102 – Temporary Air and Water Pollution, Soil Erosion, and Siltation Control.... C-102-1
C-105 – Mobilization C-105-1
C-110 – Method of Estimating Percentage of Material Within Specification Limits ….....C-110-1

Civil Sitework

S-100 – FDOT Standard Specifications....P-100-1
S-140 – Site Demolition S-140-1
S-141 – Pavement Milling....S-141-1
S-142 – Pavement Marking & Removal....P-142-1
P-151 – Clearing and Grubbing P-151-1
P-152 – Excavation, Subgrade and Embankment P-152-1
P-153 – Controlled Low Strength Material (CLSM)....P-153-1
P-154 – Subbase Course P-154-1

TABLE OF CONTENTS

TITLE **PAGE**

P-209 – Crushed Aggregate Base Course S-209-1
P-211 – Limerock Base Course P-211-1
P-304 – Cement Treated Base Course P-304-1
P-306 – Lean Concrete Base Course P-306-1
P-401 – Asphalt Mix Pavement P-401-1
P-403 – Asphalt Mix Pavements (Base Course) P-403-1
P-501 – Cement Concrete Pavement P-501-1
P-602 – Emulsified Prime Coat P-602-1
P-603 – Emulified Tack Coat S-603-1
P-604 – Compression Joint Seals for Concrete Pavements P-604-1
P-605 – Joint Sealants for Pavments P-605-1
P-610 – Concrete for Miscellaneous Structures P-610-1
P-620 – Pavement Marking P-620-1
F-162 – Chain Link Fence F-162-1
F-165 – Cantilever Slide Gate F-165-1
D-701 – Pipe for Storm Drains and Culverts D-701-1
D-751 – Drainage Structures D-751-1
T-905 – Topsoiling T-905-1
02606 – Sanitary Sewer Manholes 02606-1
15051– Buried Water and Sanitary Sewer Piping 15051-1
15100 – Valves 4 inch and Larger 15100-1

Wastewater Lift Station
33 32 17 – Submersible Utility Wastewater Pumping Station 33 32 17-1

Architectural
03 30 00 – Cast-in Place Concrete 02 30 00-1
04 22 00 – Concrete Unit Masonry 04 22 00-1
05 12 00 – Structural Steel Framing 05 12 00-1
07 92 00 – Joint Sealants 07 92 00-1
08 45 13– Joint Sealants 08 45 13-1

Lighting
L-100 – General Provisions and Requirement for Electrical Work L-100-1
L-104 – General Electrical Safety Requirements and Temp Afld Ltg L-104-1
L-105 – Alterations, Removal, and Demolition L-105-1
L-106 – Submittal, Record Documents L-106-1
L-108 – Underground Power Cable for Airports L-108-1
L-110 – Airport Underground Electrical Duct Banks and Conduits L-110-1
L-125 – Installation of Airport Lighting Systems L-125-1
L-260511 – Requirements for Electrical Installations L-260511-1
L-260521 – Low-Voltage Electrical Power Conductors and Cables (600Volts and below) L-260521-1
L-260526 – Grounding and Bonding for Electrical Systems L-260526-1
L-260541 – Underground Electrical Construction L-260541-1
L-265600 – Exterior Lighting L-265600-1
L-330523 – Directional Bore L-330523-1

TITLE **PAGE**

Appendices

Appendix A – Geotechnical Report (Intertek-PSI)
Appendix B – Construction Safety and Phasing Plan (CSPP)

INVITATION TO BID (ITB) & RESPONDENT'S ACKNOWLEDGEMENT

ITB TITLE: **CONSTRUCT WEST APRON EXPANSION AND INFRASTRUCTURE AT THE DESTIN – FORT WALTON BEACH AIRPORT (VPS)**

ITB NUMBER: ITB AP 66-19

ISSUE DATE:	June 03, 2019 8:00 AM CST
PRE BID MEETING:	June 19, 2019 2:30 PM CST
LAST DAY FOR QUESTIONS:	June 26, 2019 3:00 PM CST
ITB OPENING DATE & TIME:	July 10, 2019 3:00 PM CST

NOTE: BIDS RECEIVED AFTER THE BID OPENING DATE & TIME WILL NOT BE CONSIDERED.

Okaloosa County, Florida solicits your company to submit a bid on the above referenced goods or services. All terms, specifications and conditions set forth in this ITB are incorporated into your response. A bid will not be accepted unless all conditions have been met. All bids must have an authorized signature in the space provided below. All bids must be sealed and received by the Okaloosa County Clerk of Court by the "ITB Opening Date & Time" referenced above. "ITB Number" and the "ITB Opening Date & Time". Okaloosa County is not responsible for lost or late delivery of bids by the U.S. Postal Service or other delivery services used by the respondent. Neither faxed nor electronically submitted bids will be accepted. Bids may not be withdrawn for a period of one hundred and twenty (120) days after the bid opening unless otherwise specified.

RESPONDENT ACKNOWLEDGEMENT FORM BELOW MUST BE COMPLETED, SIGNED, AND RETURNED AS PART OF YOUR BID. BIDS WILL NOT BE ACCEPTED WITHOUT THIS FORM, SIGNED BY AN AUTHORIZED AGENT OF THE RESPONDENT.

COMPANY NAME _____

MAILING ADDRESS _____

_____

CITY, STATE, ZIP _____

FEDERAL EMPLOYER'S IDENTIFICATION NUMBER (FEIN): _____

TELEPHONE NUMBER: _____ EXT: _____ FAX: _____

EMAIL: _____

I CERTIFY THAT THIS BID IS MADE WITHOUT PRIOR UNDERSTANDING, AGREEMENT, OR CONNECTION WITH ANY OTHER RESPONDENT SUBMITTING A BID FOR THE SAME MATERIALS, SUPPLIES, EQUIPMENT OR SERVICES, AND IS IN ALL RESPECTS FAIR AND WITHOUT COLLUSION OR FRAUD. I AGREE TO ABIDE BY ALL TERMS AND CONDITIONS OF THIS BID AND CERTIFY THAT I AM AUTHORIZED TO SIGN THIS BID FOR THE RESPONDENT.

AUTHORIZED SIGNATURE: _____ TYPED OR PRINTED NAME _____

TITLE: _____

_____ DATE _____

Rev: September 22, 2015

NOTICE TO BIDDERS

CONSTRUCT WEST APRON EXPANSION AND INFRASTRUCTURE AT VPS
at
DESTIN-FORT WALTON BEACH AIRPORT
OKALOOSA COUNTY, FLORIDA

Notice is hereby given that the Board of County Commissioners of Okaloosa County will receive sealed bids until July 10, 2019 at 3:00 P.M. (local time) for the Destin-Fort Walton Beach Airport – Construct West Apron Expansion and Infrastructure at VPS project. Interested respondents desiring consideration shall provide an original and two (2) copies (total three (3)) of their Invitation to Bid (ITB) response with the respondent's area of expertise identified. Submissions shall be portrait oriented, unbound, and 8 ½"x 11" where practical. **All originals must have original signatures in blue ink.**

Bid Documents can be viewed at https://www.bidnetdirect.com/florida or at http://www.myokaloosa.com/purchasing/home then accessing the link "View Current Solicitations".

Okaloosa County (COUNTY) and the airport staff (AIRPORT) desire to construct a concrete, five(5) position apron for parking of ADG III aircraft on the west side of the airport. The project will enlarge the existing terminal apron to create additional ground loading parking spaces and overnight parking. Impacts to existing airport facilities that will be incurred include: water, sewer, lift stations, underground electrical, credit card parking, lavatory cart dump, high mast lights, fencing, gates, security cameras, covered walkways, and ground equipment parking.

Funding for this project is being provided by Okaloosa County and the FAA and will be subject to all applicable County and Federal requirements.

A non-mandatory Pre-Bid Conference will be conducted at the Destin-Fort Walton Beach Airport, Conference Room No. 1, 1701 State Road 85 N., Eglin AFB, Florida 32542, on June 19th, 2019 at 2:30 P.M. (CST). Okaloosa County will transmit to all plan holders of record an Addenda in response to written questions received no later than seven (7) days prior to Bid Opening date. Oral statements may not be relied upon and will not be binding or legally effective.
On July 10, 2019 at 3:00 P.M. (local time), all bids will be opened and read aloud. All bids must be in sealed envelopes reflecting on the outside thereof the Respondent's name and "ITB 66-19: **CONSTRUCT WEST APRON EXPANSION AND INFRASTRUCTURE AT THE DESTIN – FORT WALTON BEACH AIRPORT (VPS)"**. The Board of County Commissioners will consider all bids properly submitted at its scheduled bid opening in the Okaloosa County Courthouse located at 101 E James Lee Boulevard, Room 282, Crestview, FL 32536. Bids may be submitted in the Crestview Courthouse prior to bid opening or delivered to the Okaloosa County Courthouse, 101 James Lee Boulevard, Room 282, Crestview, FL 32536. ****NOTE: MUST RING DOORBELL TO GAIN ENTRANCE INTO ROOM 282. THE CLERK WILL COME ACCEPT YOUR PACKAGE OR SHOW YOU TO THE CONFERENCE ROOM FOR THE SCHEDULED BID OPENING****

NOTE: THE NEW CRESTVIEW COURTHOUSE HAS SECURITY AT ENTRY POINT-PLEASE ALLOW FOR TIME TO GET THROUGH SECURITY WHEN ARRIVING FOR THE BID OPENING.

NOTE: Crestview, FL is not a next day guaranteed delivery location by most delivery services. Respondents using mail or delivery services assume all risks of late or non-delivery.

All originals must have original signatures in blue pen ink.

OWNER'S CONTACT:
DeRita Mason
Victoria Taravella
Contracts & Lease Coordinator
Okaloosa County Purchasing Department
5479 Old Bethel Rd., Suite A Crestview, FL 32536
Tel: 850-689-5960
Fax: 850-689-5970
dmason@myokaloosa.com
vtaravella@myokaloosa.com

All bids should be addressed as follows:

BID ENCLOSED – CONSTRUCT WEST APRON EXPANSION AND INFRASTRUCTURE AT THE DESTIN – FORT WALTON BEACH AIRPORT (VPS)

Clerk of the Court

BCC Records
101 East James Lee Blvd. Room 282
Crestview, FL 32536

_____ _____
Jeffrey Hyde Date
Purchasing Manager

BOARD OF COUNTY COMMISSIONERS
OKALOOSA COUNTY, FL

Charles K. Windes, Jr.
Chair

INSTRUCTIONS TO CONTRACTORS

PROJECT IDENTIFICATION:

a) Project Title:

CONSTRUCT WEST APRON EXPANSION AND INFRASTRUCTURE AT VPS

b) Owner:

OKALOOSA COUNTY BOARD OF COUNTY COMMISSIONERS

c) Engineer:

INFRASTRUCTURE CONSULTING & ENGINEERING

1. Defined Terms.

Certain additional terms used in the Instruction to Bidders have the meanings indicated below which are applicable to both the singular and plural thereof.

1.1 Bidder – one who submits a Bid directly to Owner as distinct from sub-contractor, who submits a bid to a Bidder.

1.2 Issuing Office/Purchasing Department – the office from which the Project Documents are to be issued and where the bid procedures are to be administered.

1.3 Successful Bidder – the lowest, responsible and responsive Bidder to whom Owner (on the basis of Owner's evaluation as hereinafter provided) makes an award.

2. Copies of Project Documents.

2.1 Complete sets of the Project Documents may be obtained from BidNet and the Okaloosa County website.

2.2 Complete sets of Project Documents must be used in preparing Bids; neither Owner nor Engineer assume any responsibility for errors or misinterpretations resulting from the use of incomplete sets of Project Documents.

2.3 Owner and Engineer in making copies of Project Documents available on the above terms do so only for the purpose of obtaining Bids for the Work and do not confer a license or grant for any other use.

3. Qualifications of Contractors.

To demonstrate qualifications to perform the Work, each Contractor must upon Owner's request, provide detailed written evidence such as financial data, previous experience, present commitments and other such data as may be called for below. Each Bid must contain evidence of Contractors qualification to do business in the state where the Project is located or covenant to obtain such qualification prior to award of the contract.

4. Examination of Documents and Site.

4.1 It is the responsibility of each bidder before submitting a Bid:

4.1.1 To examine thoroughly these documents and other related data identified (including "technical data" referred to below);

4.1.2 To visit the site to become familiar with and satisfy Bidder as to the general, local and site conditions that may affect cost, progress, performance, or furnishing of the Work;

4.1.3 To consider federal, state, and local Laws and Regulations that may affect cost, progress, performance or furnishing of the Work;

4.1.4 To study and carefully correlate Bidder's knowledge and observations with these Project Documents and such other related data; and

4.1.5 To promptly notify Engineer of all conflicts, errors, ambiguities or discrepancies which Bidder has discovered in or between these Project Documents and such other related documents.

4.2 thru 4.5 (omitted)

4.6 Upon request to the Purchasing Department, Owner will provide each Bidder access to the site to conduct such examinations, investigations, explorations, tests, and studies as each Bidder deems necessary for submission of a Bid. Bidder must fill all holes and clean up and restore the site to its former conditions upon completion of such explorations, investigations, tests, and studies.

4.7 Reference is made to the Bid documents for the identification of the general nature of work that is to be performed at the site by Owner or others (such as utilities and other prime contractors) that relates to the work for which a Bid is to be submitted. On request to the Purchasing Department, Owner will provide to each Bidder for examination access to or copies of appropriate documents (other than portions thereof related to price) for such work.

4.8 The submission of a Bid will constitute and incontrovertible representation by Bidder that Bidder has complied with every requirement of this Article 4, that without exception of the Bid is premised upon performing and furnishing the Work required by these Project Documents and applying the specific means, methods, techniques, sequences, or procedures for construction (if any) that may be shown or indicated or expressly required by these Project Documents, the Bidder has given Engineer written notice of all conflicts, errors, ambiguities and discrepancies that Bidder has discovered in these Project Documents are generally sufficient to indicate and convey understanding of all terms and conditions for performing and furnishing the Work.

4.9 The provisions of 1-4.1 through 4.8, inclusive, do not apply to Asbestos, Polychlorinated biphenyls (PCBs), Petroleum, Hazardous Waste, or Radioactive Material.

5. Availability of Lands for Work, Etc.

The lands upon which the Work is to be performed, rights-of-way and easements for access thereto and other lands designated for use by the successful Bidder in performing the Work are identified in these Project Documents. All additional land and access thereto required for temporary construction facilities, construction equipment, or storage of materials and equipment to be incorporated in the Work are to be obtained and paid for by the Successful Bidder. Easements for permanent structures or permanent changes in existing facilities are to be obtained and paid for by Owner unless otherwise provided in these Project Documents.

6. Interpretations and Addenda.

6.1 All questions about the meaning or intent of these Project Documents are to be directed to Issuing Office. Interpretations or clarifications considered necessary by Issuing Office in response to such questions

will be issued by Addenda on the Purchasing website and bid net as mentioned above. Questions received after the question deadline may not be answered. Only questions answered by formal written Addenda will be binding. Oral and other interpretations or clarifications will be without legal effect.

Addenda may also be issued to modify these Project Documents as deemed advisable by Owner or Engineer.

7. Bid Security.

7.1 Each Bid must be accompanied by Bid security made payable to Owner in an amount of five percent (5%) of Bidders maximum Bid Price in the form of a certified or bank check or a Bid Bond on form attached, issued by a surety.

7.2 The Bid security of Successful Bidder will be retained until such Bidder has executed the Agreement, furnished the required contract security, and met the other conditions of the Notice of Award, whereupon the Bid security will be returned. If the Successful Bidder fails to execute and deliver the Agreement and furnishes the required contract security within fifteen days after the Notice of Award, Owner may annul the Notice of Award and the Bid security of that Bidder will be forfeited. The Bid security of other Bidders whom Owner believes to have a reasonable chance of receiving the award may be retained by Owner until the earlier of:

the seventh (7th) day after the Effective Date of the Agreement

or

the thirty-sixth (36th) day after the Bid opening,

whereupon Bid security furnished by such Contractors will be returned. Bid security with Bids which are not competitive will be returned within seven (7) days after the issuing of the Intent to Award.

8. Contract Times.

The Contractor shall have 380 calendar days from the Issuance of the Notice to proceed. At such time, the Work is to be completed and ready for final payment.

9. Substitute and "Or-Equal" Items.

The Contract, if awarded, will be on the basis of materials and equipment described in the Drawings or specified in the Specifications. Whenever it is indicated in the Drawings or specified in the specifications that a substitute or “or-equal” item of material or equipment may be furnished or used by Contractor if acceptable to the County, acceptance of the substitution “or equal” to material or equipment, will typically be considered by the County after the contract is awarded. However, any proposed substitution that represents a deviation from the design intent, must be approved prior to submission of the bid responses. A determination as to whether a design deviation or particular item that changes the design intent of the plans or specification is acceptable as a substitute or “equal” will be made by the County and Engineer. Design deviations approved prior to bid submittals will be made known to other bidders through an addendum.

10. Subcontractors, Suppliers, and Others

10.1 If the Bid documents require the identity of certain Subcontractors, Suppliers and other persons and organizations (including those who are to furnished the principal items of material and equipment) are to be submitted to Owner in advance of a specified date prior to the Effective Date of the Agreement. Apparent Successful Contractor, and any other Contractor so requested, shall with Bid documents submit to Owner a list of all such Subcontractors, Suppliers, and other persons and organizations proposed for those portions of the Work for which such identification is required. Such list shall be accompanied by an experience statement with pertinent information regarding similar projects and other evidence of qualification for each such Subcontractor Supplier, person, or organization if requested by Owner. An Owner or Engineer who after due investigation has reasonable objection to any proposed Subcontractor, Supplier, other person, or organization, may before the Notice of Award is given request apparent Successful Contractor to submit an acceptable substitute without an increase in Bid Price.

If apparent Successful Contractor declines to make any such substitution, Owner may award the contract to the next lowest Contractor that proposes to use acceptable Subcontractors, Suppliers, and other persons and organizations. The declining to make requested substitutions will not constitute grounds for sacrificing the Bid security of any Contractor. Any subcontractor, Supplier, other person or organization listed and to whom Owner or Engineer does not make written objection prior to the giving of the Notice of Award will be deemed acceptable to Owner and Engineer subject to revocation of such acceptance after the Effective Date of the Agreement.

11. PRE-BID ACTIVITY -

Except as provided in this section, respondents are prohibited from contacting or lobbying the County, County Administrator, Commissioners, County staff, and Review Committee members, or any other person authorized on behalf of the County related or involved with the solicitation. All inquiries on the scope of work, specifications, additional requirements, attachments, terms and general conditions or instructions, or any issue must be directed in writing, by US mail or email to:

Okaloosa County Purchasing Department
5479A Old Bethel Road
Crestview, FL 32536
Email: dmason@myokaloosa.com
(850) 689-5960

All questions or inquiries must be received no later than the last day for questions (reference ITB & Respondent's Acknowledgement form). Any addenda or other modification to the bid documents will be issued by the County five (5) days prior to the date and time of bid closing, as written addenda, and will be posted to and the Okaloosa County website at http://www.myokaloosa.com/purchasing/current-solicitations and the Bidnet website at https://www.bidnetdirect.com/florida.

Such written addenda or modification shall be part of the bid documents and shall be binding upon each respondent. Each respondent is required to acknowledge receipt of any and all addenda in writing and submit with their bid. No respondent may rely upon any verbal modification or interpretation.

12. PREPARATION OF BID – The bid form is included with the bid documents. Additional copies may be obtained from the County. The respondent shall submit bids in accordance with the public notice.

All blanks in the bid documents shall be completed by printing in ink or by typewriter in both words and numbers with the amounts extended, totaled and the bid signed. A bid price shall be indicated for each section, bid item, alternative, adjustment unit price item, and unit price item listed therein, or the words "No Bid", "No Change", or "Not Applicable" entered. No changes shall be made to the phraseology of the form or in the items mentioned therein. In case of any discrepancy between the written amount and the numerical figures, the written amount shall govern. Any bid which contains any omissions, erasures, alterations, additions, irregularities of any kind, or items not called for which shall in any manner fail to conform to the conditions of public notice inviting bids may be rejected.

A bid submitted by a partnership shall be executed in the partnership name and signed by a partner (whose title must appear under the signature). The official address of the partnership shall be shown below the signature.

A bid submitted by a limited liability company shall be executed in the name of the firm by a member and accompanied by evidence of authority to sign. The state of formation of the firm and the official address of the firm must be shown below the signature.

A bid submitted by an individual shall show the respondent's name and official address.

A bid submitted by a joint venture shall be executed by each joint venture in the manner indicated on the bid form. The official address of the joint venture must be shown below the signature.
It is preferred that all signatures be in blue ink with the names type or printed below the signature. Okaloosa County does not accept electronic signatures.

The bid shall contain an acknowledgement of receipt of all Addenda, the numbers of which shall be filled in on the form. The address and telephone # for communications regarding the bid shall be shown.

If the respondent is an out-of-state corporation, the bid shall contain evidence of respondent's authority and qualification to do business as an out-of-state corporation in the State of Florida. A state contractor license # for the State of Florida shall also be included on the bid form. Respondent shall be licensed in accordance with the requirements of Chapter 489, Florida Statutes.

13. INTEGRITY OF BID DOCUMENTS - Respondents shall use the original Bid documents provided by the Purchasing Department and enter information only in the spaces where a response is requested. Respondents may use an attachment as an addendum to the Bid documents if sufficient space is not available. Any modifications or alterations to the original bid documents by the respondent, whether intentional or otherwise, will constitute grounds for rejection of a bid. Any such modification or alteration that a respondent wish to propose must be clearly stated in the respondent's response in the form of an addendum to the original bid documents.

14. SUBMITTAL OF BID – A bid shall be submitted no later than the date and time prescribed and at the place indicated in the advertisement or invitation to bid and shall be enclosed in an opaque sealed envelope plainly marked with the project title (and, if applicable, the designated portion of the project for which the bid is submitted), the name and address of the respondent, and shall be accompanied by the bid security and other required documents. It is the respondent's responsibility to assure that its bid is delivered at the proper time and place. Offers by email, facsimile, or telephone will **NOT** be accepted.

Note: Crestview is not a next day delivery site for overnight carriers.

15. MODIFICATION & WITHDRAWAL OF BID - A bid may be modified or withdrawn by an appropriate document duly executed in the manner that a bid must be executed and delivered to the place where bids are to be submitted prior to the date and time for the opening of bids.

If within 24 hours after bids are opened any respondent files a duly signed written notice with the County and promptly thereafter demonstrates to the reasonable satisfaction of the County that there was a material substantial mistake in the preparation of its bid, that respondent may withdraw its bid, and the bid security may be returned. Thereafter, if the work is rebid, that respondent will be disqualified from 1) further bidding on the work, and 2) doing any work on the contract, either as a subcontractor or in any other capacity.

16. BIDS TO REMAIN SUBJECT TO ACCEPTANCE – All bids will remain subject to acceptance or rejection for one hundred twenty (120) calendar days after the day of the bid opening, but the County may, in its sole discretion, release any bid and return the bid security prior to the end of this period.

17. IDENTICAL TIE BIDS - – In cases of identical procurement responses, the award shall be determined either by lot or on the basis of factors deemed to serve the best interest of the County. In the case of the latter, there must be adequate documentation to support such a decision.

18. CONDITIONAL & INCOMPLETE BIDS - Okaloosa County specifically reserves the right to reject any conditional bid and bids which make it impossible to determine the true amount of the bid.

19. PRICING – The bid price shall include all equipment, labor, materials, freight, taxes etc. Okaloosa County reserves the right to select that bid most responsive to our needs.

20. ADDITION/DELETION OF ITEM – The County reserves the right to add or delete any item from this bid or resulting contract when deemed to be in the County's best interest.

21. SPECIFICATION EXCEPTIONS – Specifications are based on the most current literature available. Respondent shall clearly list any change in the manufacturer's specifications which conflict with the bid specifications. Respondent must also explain any deviation from the bid specification in writing, as a foot note on the applicable bid page and enclose a copy of the manufacturer's specifications data detailing the changed item(s) with their bid. Failure of the respondent to comply with these provisions will result in respondents being held responsible for all costs required to bring the equipment in compliance with bid specifications.

22. APPLICABLE LAWS & REGULATIONS – All applicable Federal and State laws, County and municipal ordinances, orders, rules and regulations of all authorities having jurisdiction over the project shall apply to the bid throughout, and they will be deemed to be included in the contract the same as though they were written in full therein.

23. DISQUALIFICATION OF RESPONDENTS - Any of the following reasons may be considered as sufficient for the disqualification of a respondent and the rejection of its bid:

a. Submission of more than one proposal for the same work from an individual, firm or corporation under the same or different name.

b. Evidence that the respondent has a financial interest in the firm of another respondent for the same work.

c. Evidence of collusion among respondents. Participants in such collusion will receive no recognition as respondents for any future work of the County until such participant has been reinstated as a qualified respondent.

d. Uncompleted work which in the judgment of the County might hinder or prevent the prompt completion of additional work if awarded.

e. Failure to pay or satisfactorily settle all bills due for labor and material on former contracts in force at the time of advertisement of proposals.

f. Default under previous contract.

g. Listing of the respondent by any Local, State or Federal Government on its barred/suspended vendor list.

h. Violation of the Cone of Silence.

24. AWARD OF BID

a. **Okaloosa County Review** - Okaloosa County designated Staff will review all bids and will participate in the Recommendation to Award.

b. The County will award the bid to the responsive and responsible vendor(s) with the lowest responsive bid(s), and the County reserves the right to award the bid to the respondent submitting a responsive bid with a resulting negotiated agreement which is most advantageous and in the best interest of the County, and to reject any and all bids or to waive any irregularity or technicality in bids received. Okaloosa County shall be the sole judge of the bid and the resulting negotiated agreement that is in its best interest and its decision shall be final.

c. Okaloosa County reserves the right to waive any informalities or reject any and all bids, in whole or part, to utilize any applicable state contracts in lieu of or in addition to this bid and to accept the bid that in its judgment will best serve the interest of the County.

d. Okaloosa County specifically reserves the right to reject any conditional bids and will normally reject those which made it impossible to determine the true amount of the bid. Each item must be bid separately and no attempt is to be made to tie any item or items to any other item or items.

25. PAYMENTS – Vendor shall make all firm fixed commission fees payable to the County of Okaloosa and remitted to BCC Finance, Crestview Courthouse located at 101 E James Lee Boulevard, Crestview, FL 32536.

26. DISCRIMINATION - An entity or affiliate who has been placed on the discriminatory vendor list may not submit a bid on a contract to provide goods or services to a public entity, may not submit a bid on a contract with a public entity for the construction or repair of a public building or public work, may not submit bids on leases of real property to a public entity, may not award or perform work as a contractor,

supplier, subcontractor, or consultant under contract with any public entity, and may not transact business with any public entity.

27. PUBLIC ENTITY CRIME INFORMATION - Pursuant to Florida Statute 287.133, a respondent may not be awarded or perform work as a contractor, supplier, subcontractor, or consultant under a contract with any public entity; and may not transact business with any public entity in excess of the threshold amount provided in s. 287.017 for CATEGORY TWO for a period of 36 months following the date of being placed on the convicted vendor list.

28. CONFLICT OF INTEREST - The award hereunder is subject to the provisions of Chapter 112, Florida Statutes. All respondents must disclose with their bids the name of any officer, director, or agent who is also a public officer or an employee of the Okaloosa Board of County Commissioners, or any of its agencies. Furthermore, all respondents must disclose the name of any County officer or employee who owns, directly or indirectly, an interest of five percent (5%) or more in the firm or any of its branches.

Note: For respondent's convenience, this certification form is enclosed and is made a part of the bid package.

29. REORGANIZATION OR BANKRUPTCY PROCEEDINGS – Bids will not be considered from respondents who are currently involved in official financial reorganization or bankruptcy proceedings.

30. INVESTIGATION OF RESPONDENT – The County may make such investigations, as it deems necessary to determine the stability of the respondent to perform the work and that there is no conflict of interest as it relates to the project. The respondent shall furnish to the Owner any additional information and financial data for this purpose as the County may request.

31. CONE OF SILENCE CLAUSE - The Okaloosa County Board of County Commissioners has established a solicitation silence policy **(Cone of Silence Clause)** that prohibits oral and written communication regarding all formal solicitations for goods and services (formal bids, Request for Proposals, Requests for Qualifications) issued by the Board through the County Purchasing Department. The period commences from the date of advertisement until award of contract.

All communications shall be directed to the Purchasing Department.

Note: For respondent's convenience, this certification form is enclosed and is made a part of the bid package.

32. REVIEW OF PROCUREMENT DOCUMENTS - Per Florida Statute 119.071(1)(b) 2 sealed bids, proposals, or replies received by the County pursuant to a competitive solicitation are exempt from public disclosure until such time as the County provides notice of an intended decision or until 30 days after opening the bids, proposals, or final replies, whichever is earlier.

33. COMPLIANCE WITH FLORIDA STATUTE 119.0701 - The Respondent shall comply with all the provisions of section 119.0701, Florida Statutes relating to the public records which requires, among other things, that the Respondent: (a) Keep and maintain public records; (b) Provide the public with access to public records on the same terms and conditions that the public agency would provide the records; (c) ensure that public records that are exempt or confidential and exempt from public records disclosure requirements are not disclosed except as authorized by law; and (d) Meet all requirements for retaining public records and transfer, at no cost, to the public agency all public records in possession of the respondent upon termination of the contract.

34. PROTECTION OF RESIDENT WORKERS – The Okaloosa County Board of County Commissioners actively supports the Immigration and Nationality Act (INA) which includes provisions addressing employment eligibility, employment verifications, and nondiscrimination. Under the INA, employers may hire only persons who may legally work in the United States (i.e., citizens and nationals of the U.S.) and aliens authorized to work in the U.S. The employer must verify the identity and employment eligibility of anyone to be hired, which includes completing the Employment Eligibility Verifications. The respondent shall establish appropriate procedures and controls so no services or products under the Contract Documents will be performed or manufactured by any worker who is not legally eligible to perform such services or employment. Okaloosa County reserves the right to request documentation showing compliance with the requirements.

Respondents doing construction business with Okaloosa County are required to use the Federal Government Department of Homeland Security's website and use the E-Verify Employment Eligibility Verifications System to confirm eligibility of all employees to work in the United States.

35. SUSPENSION OR TERMINATION FOR CONVENIENCE - The County may, at any time, without cause, order Respondent in writing to suspend, delay or interrupt the work in whole or in part for such period of time as the County may determine, or to terminate all or a portion of the Contract for the County's convenience. Upon such termination, the Contract Price earned to the date of termination shall be paid to Respondent, but Respondent waives any claim for damages, including loss of profits arising out of or related to the early termination. Those Contract provisions which by their nature survive final acceptance shall remain in full force and effect. If the County orders a suspension, the Contract price and Contract time may be adjusted for increases in the cost and time caused by suspension, delay or interruption. No adjustment shall be made to the extent that performance is, was or would have been so suspended, delayed or interrupted by reason for which Respondent is responsible; or that an equitable adjustment is made or denied under another provision of this Contract.

36. FAILURE OF PERFORMANCE/DELIVERY - In case of default by the respondent, the County after due notice (oral or written) may procure the necessary supplies or services from other sources and hold the respondent responsible for difference in cost incurred. Continuous instances of default shall result in cancellation of the award and removal of the respondent from the bid list for duration of one (1) year, at the option of the County.

37. AUDIT - If requested, respondent shall permit the County or an authorized, independent audit agency to inspect all data and records of respondent relating to its performance and its subcontracts under this bid from the date of the award through three (3) years after the expiration of contract.

38. EQUAL EMPLOYMENT OPPORTUNITY; NON DISCRIMINATION – Respondent will not discriminate against any employee or an applicant for employment because of race, color, religion, gender, sexual orientation, national origin, age, familial status or handicap.

39. NON-COLLUSION – Respondent certifies that it has entered into no agreement to commit a fraudulent, deceitful, unlawful or wrongful act, or any act which may result in an unfair advantage over other respondents. See Florida Statute 838.22.

40. UNAUTHORIZED ALIENS/PATRIOT'S ACT – The knowing employment by respondent or its subcontractors of any alien not authorized to work by the immigration laws is prohibited and shall be a default of the contract. In the event that the respondent is notified or becomes aware of such default, the respondent shall take steps as are necessary to terminate said employment with 24 hours of notification or

actual knowledge that an alien is being employed. Respondent's failure to take such steps as are necessary to terminate the employment of any said alien within 24 hours of notification or actual knowledge that an alien is being employed shall be grounds for immediate termination of the contract. Respondent shall take all commercially reasonable precautions to ensure that it and its subcontractors do not employ persons who are not authorized to work by the immigration laws.

41. ACCEPTANCE - Delivery of material to Okaloosa Board of County Commissioners does not constitute acceptance for the purpose of payment. Final acceptance and authorization of payment shall be given only after a thorough inspection indicates that the material meets contract specifications and conditions as listed. Should the delivered material differ in any respect from specifications, payment will be withheld until such time as the supplier takes necessary corrective action. The Purchasing Department shall be notified of the deviation in writing within 10 days and the provisions of the delivery paragraph shall prevail. If the proposed corrective action is not acceptable to Okaloosa County, the final acceptance of the material shall remain the property of the supplier and the county shall not be liable for payment for any portion thereof.

42. Pre-Bid Conference.

A **non-mandatory** Pre-Bid Conference will be conducted at the time and place stated in the Notice to Bidders. The County's Purchasing Department, will transmit via the County website and BidNet such Addenda as Engineer and Owner consider necessary in response to written questions received no later than the question deadline specified in the Invitation to Bid. Oral statements may not be relied upon and will not be binding or legally effective.

43. Sales and Use Taxes.

Work under this Bid is subject to the provisions of Chapter 212, Florida Statutes, Tax on state, Use and Other Transactions. Other state, local, or federal taxes may be applicable. The contractor is responsible to remit to the appropriate governmental entity all applicable taxes. Any applicable tax shall be included in the total Bid price by the contractor.

END OF INSTRUCTION TO CONTRACTORS

OKALOOSA COUNTY STANDARD CLAUSES

INDEMNIFICATION AND HOLD HARMLESS

CONTRACTOR shall indemnify and hold harmless **COUNTY**, its officers and employees from liabilities, damages, losses, and costs including but not limited to reasonable attorney fees, to the extent caused by the negligence, recklessness, or intentional wrongful conduct of the **CONTRACTOR** and other persons employed or utilized by the **CONTRACTOR** in the performance of this Agreement.

NOTE: For Contractor's convenience, this certification form is enclosed and is made a part of the bid package.

TRENCH SAFETY ACT

Each contractor must submit with his bid an executed sworn certification that he will comply with the Trench Safety Act, Chapter 90-96, Florida Statues, on trench safety.

NOTE: For Contractor's convenience, a certification form is enclosed and is made a part of the bid package.

PUBLIC ENTITY CRIME INFORMATION

A person or affiliate who has been placed on the convicted vendor list following a conviction for a public entity crime may not submit a bid on a contract to provide any goods or services to a public entity, may not submit a bid on a contract with a public entity for the construction or repair of a public building or public work, may not submit bids on leases of real property to a public entity, may not be awarded or perform work as a contractor, supplier, subcontractor, or consultant under a contract with any public entity, and may not transact business with any public entity in excess of the threshold amount provided in Section 287.107, for CATEGORY TWO for a period of 36 months from the date of being placed on the convicted vendor list.

BONDING REQUIREMENTS

A Bid Bond is required with the Respondent's submittal for 5% of the Bid price, in the form of a cashier's check, certified check or bond. A performance and payment bond will be required in the amount of 100% of the estimated contract value. The performance bond and payment bond can be a total of 100% combined.

GENERAL SERVICES INSURANCE REQUIREMENTS

REVISED: 08/01/2018

CONTRACTORS INSURANCE

1. The Contractor shall not commence any work in connection with this Agreement until he has obtained all required insurance and such insurance has been approved by the Okaloosa County Risk Manager or designee.

2. All insurance policies shall be with insurers authorized to do business in the State of Florida.

3. All insurance shall include the interest of all entities named and their respective officials, employees & volunteers of each and all other interests as may be reasonably required by Okaloosa County. The coverage afforded the Additional Insured under this policy shall be primary insurance. If the Additional Insured have other insurance that is applicable to the loss, such other insurance shall be on an excess or contingent basis. The amount of the company's liability under this policy shall not be reduced by the existence of such other insurance.

4. The County shall be shown as an Additional Insured with a Waiver of Subrogation on the Certificate of Insurance.

5. The County shall retain the right to reject all insurance policies that do not meet the requirement of this Agreement. Further, the County reserves the right to change these insurance requirements with 60-day notice to the Contractor.

6. The County reserves the right at any time to require the Contractor to provide copies (redacted if necessary) of any insurance policies to document the insurance coverage specified in this Agreement.

7. The designation of Contractor shall include any associated or subsidiary company which is involved and is a part of the contract and such, if any associated or subsidiary company involved in the project must be named in the Workers' Compensation coverage.

8. Any exclusions or provisions in the insurance maintained by the Contractor that excludes coverage for work contemplated in this agreement shall be deemed unacceptable and shall be considered breach of contract.

WORKERS' COMPENSATION INSURANCE

1. The Contractor shall secure and maintain during the life of this Agreement Workers' Compensation insurance for all of his employees employed for the project or any site connected with the work, including supervision, administration or management, of this project and in case any work is sublet, with the approval of the County, the Contractor shall require the Subcontractor similarly to provide Workers' Compensation insurance for all employees employed at the site of the project, and such evidence of insurance shall be furnished to the County not less than ten (10) days prior to the commencement of any and all sub-contractual Agreements which have been approved by the County.

2. Contractor must be in compliance with all applicable State and Federal workers' compensation laws, including the U.S. Longshore Harbor Workers' Act or Jones Act, if applicable.

3. No class of employee, including the Contractor himself, shall be excluded from the Workers' Compensation insurance coverage. The Workers' Compensation insurance shall also include Employer's Liability coverage.

BUSINESS AUTOMOBILE LIABILITY

Coverage must be afforded for all Owned, Hired, Scheduled, and Non-Owned vehicles for Bodily Injury and Property Damage in an amount not less than $1,000,000 combined single limit each accident. If the contractor does not own vehicles, the contractor shall maintain coverage for Hired & Non-Owned Auto

Liability, which may be satisfied by way of endorsement to the Commercial General Liability policy or separate Business Auto Policy. Contractor must maintain this insurance coverage throughout the life of this Agreement.

COMMERCIAL GENERAL LIABILITY INSURANCE

1. The Contractor shall carry other Commercial General Liability insurance against all other Bodily Injury, Property Damage and Personal and Advertising Injury exposures.

2. All liability insurance (other than Professional Liability) shall be written on an occurrence basis and shall not be written on a claims-made basis. If the insurance is issued with an aggregate limit of liability, the aggregate limit of liability shall apply only to the locations included in this Agreement. If, as the result of any claims or other reasons, the available limits of insurance reduce to less than those stated in the Limits of Liability, the Contractor shall notify the County representative in writing. The Contractor shall purchase additional liability insurance to maintain the requirements established in this Agreement. Umbrella or Excess Liability insurance can be purchased to meet the Limits of Liability specified in this Agreement.

3. Commercial General Liability coverage shall include the following:

    1.) Premises & Operations Liability
    2.) Bodily Injury and Property Damage Liability
    3.) Independent Contractors Liability
    4.) Contractual Liability
    5.) Products and Completed Operations Liability

4. Contractor shall agree to keep in continuous force Commercial General Liability coverage for the length of the contract.

LIMITS OF LIABILITY

The insurance required shall be written for not less than the following, or greater if required by law and shall include Employer's liability with limits as prescribed in this contract:

		LIMIT
1.	Worker's Compensation	
	1.) State	Statutory
	2.) Employer's Liability	$500,000 each accident
2.	Business Automobile	$15,000,000.00 each accident (A combined single limit)
3.	Commercial General Liability	$15,000,000.00 each occurrence for Bodily Injury & Property Damage $15,000,000.00 each occurrence Products and completed operations
4.	Personal and Advertising Injury	$15,000,000.00 each occurrence

NOTICE OF CLAIMS OR LITIGATION

The Contractor agrees to report any incident or claim that results from performance of this Agreement. The County representative shall receive written notice in the form of a detailed written report describing the incident or claim within ten (10) days of the Contractor's knowledge. In the event such incident or claim involves injury and/or property damage to a third party, verbal notification shall be given the same day the Contractor becomes aware of the incident or claim followed by a written detailed report within ten (10) days of verbal notification.

INDEMNIFICATION & HOLD HARMLESS

Contractor shall indemnify and hold harmless the County, its officers and employees from liabilities, damages, losses, and costs including but not limited to reasonable attorney fees, to the extent caused by the negligence, recklessness, or wrongful conduct of the Contractor and other persons employed or utilized by the Contractor in the performance of this contract.

Note: For Contractor's convenience, this certification form is enclosed and is made a part of the bid package.

CERTIFICATE OF INSURANCE

1. Certificates of insurance indicating the job site and evidencing all required coverage must be submitted not less than 10 days prior to the commencement of any of the work. The certificate holder(s) shall be as follows: Okaloosa County, 5479A Old Bethel Road, Crestview, Florida, 32536.

2. The contractor shall provide a Certificate of Insurance to the County with a thirty (30) day notice of cancellation; ten (10) days' notice if cancellation is for nonpayment of premium.

3. In the event that the insurer is unable to accommodate the cancellation notice requirement, it shall be the responsibility of the contractor to provide the proper notice. Such notification shall be in writing by registered mail, return receipt requested, and addressed to the Okaloosa County Purchasing Department at 5479-A Old Bethel Road, Crestview, FL 32536.

4. In the event the contract term goes beyond the expiration date of the insurance policy, the contractor shall provide the County with an updated Certificate of insurance no later than ten (10) days prior to the expiration of the insurance currently in effect. The County reserves the right to suspend the contract until this requirement is met.

5. The certificate shall indicate if coverage is provided under a claims-made or occurrence form. If any coverage is provided on a claims-made form, the certificate will show a retroactive date, which should be the same date of the initial contract or prior.

6. All certificates shall be subject to Okaloosa County's approval of adequacy of protection and the satisfactory character of the Insurer.

7. All deductibles or SIRs, whether approved by Okaloosa County or not, shall be the Contractor's full responsibility. In particular, the Contractor shall afford full coverage as specified herein to

entities listed as Additional Insured.

8. In no way will the entities listed as Additional Insured be responsible for, pay for, be damaged by, or limited to coverage required by this schedule due to the existence of a deductible or SIR.

GENERAL TERMS

Any type of insurance or increase of limits of liability not described above which, the Contractor required for its own protection or on account of statute shall be its own responsibility and at its own expense.

Any exclusions or provisions in the insurance maintained by the contractor that excludes coverage for work contemplated in this contract shall be deemed unacceptable and shall be considered breach of contract.

The carrying of the insurance described shall in no way be interpreted as relieving the Contractor of any responsibility under this contract.

Should the Contractor engage a subcontractor or sub-subcontractor, the same conditions will apply under this Agreement to each subcontractor and sub-subcontractor.

The Contractor hereby waives all rights of subrogation against Okaloosa County and its consultants and other indemnities of the Contractor under all the foregoing policies of insurance.

UMBRELLA INSURANCE

The Contractor shall have the right to meet the liability insurance requirements with the purchase of an umbrella insurance policy. In all instances, the combination of primary and umbrella liability coverage must equal or exceed the minimum liability insurance limits stated in this Agreement.

Liquidated Damages:

In case of failure on the part of the Contractor to complete the work within the time(s) specified in the contract, or within such additional time(s) as may be granted by Okaloosa County, the County will suffer damage, the amount of which is difficult, if not impossible, to ascertain. Therefore, the Contractor shall pay to the County, as liquidated damages, the amount established in the schedule below for each calendar day of delay that actual completion extends beyond the time limit specified until such reasonable time as may be required for final completion of the work. In no way shall costs for liquidated damages be construed as penalty on the contractor.

Daily Charge

Original Contract Amount	**Per Calendar Day**
$50,000 and under	**$ 311**
Over $50,000 but less than $250,000	**972**
$250,000 but less than $500,000	**1584**
$500,000 but less than $2,500,000	**1924**
$2,500,000 but less than $5,000,000	**2694**
$5,000,000 but less than $10,000,000	**3902**

$10,000,000 but less than $15,000,000	**6102**
$15,000,000 but less than $20,000,000	**7022**
$20,000,000 and over	**7022**

Determination of Number of Days of Default: For all contracts, regardless of whether the contract time is stipulated in calendar days or working days, the default days shall be counted in calendar days.

Conditions under which Liquidated Damages are Imposed: Should the Contractor or, in case of his default, the Surety, fail to complete the work within the time stipulated in the contract, or within such extra time as may have been granted by the County, the Contractor or, in case of his default, the Surety, shall pay to the County, not as a penalty, but as liquidated damages, the amount so due as determined by the Code requirements, as provided above.

Right of Collection: The County shall have the right to apply as payment on such liquidated damages any money which is due to the Contractor by the County.

Permitting Contractor to Finish Work: Permitting the Contractor to continue and to finish the work, or any part of it, after the expiration of the contract time allowed, including extensions of time granted to the Contractor, shall in no way act as a waiver on the part of the County the liquidated damages due under the contract.

Completion of Work by County: In case of default of the contract and the completion of the work by the County, the Contractor and his Surety shall be liable for the liquidated damages under the contract, but no liquidated damages shall be chargeable for any delay in the final completion of the work by the County due to any unreasonable action or delay on the part of the County.

END OF OKALOOSA COUNTY STANDARD CLAUSES

BID FORM

PROJECT IDENTIFICATION:

CONSTRUCT WEST APRON EXPANSION AND INFRASTRUCTURE AT VPS

CONTRACT IDENTIFICATION AND NUMBER:

Okaloosa County Bid No.: ITB-AP-66-19
FAA AIP No.: 3-12-0081-029-2018

THIS BID IS SUBMITTED TO:

OKALOOSA COUNTY BOARD OF COUNTY COMMISSIONERS

1. The undersigned Contractor proposes and agrees, if this Bid is accepted, to enter into an agreement with Owner in the form included in these documents to perform and furnish all Work as specified or indicated in these documents for the Bid Price and within the Bid Times indicated in this Bid and in accordance with the other terms and conditions of these documents.

2. Contractor accepts all of the terms and conditions of the Invitation to Bid and Instructions to Contractors, including without limitation those dealing with the disposition of Bid security. This Bid will remain subject to acceptance for one hundred twenty (120) days after the day of Bid opening. Bidder will sign and deliver the required number of counterparts of the Agreement with the Bonds and other documents required by the Project Requirements within fifteen (15) days after the date of Owner's Notice of Award.

3. In submitting this Bid, Contractor represents as more fully set forth in the Agreement, that:

(a) Contractor has examined and carefully studied the Project Documents and the following Addenda receipt of all which is hereby acknowledged: (List Addenda by Addendum Number and Date)

Addendum No. _____ Date _____

Addendum No. _____ Date _____

Addendum No. _____ Date _____

Addendum No. _____ Date _____

(b) Contractor has visited the site and become familiar with and is satisfied as to the general, local, and site conditions that may affect cost, progress, performance, and furnishing of the Work.

(c) Contractor is familiar with and is satisfied as to all federal, state, and local Laws and Regulations that may affect cost, progress, performance, and furnishing of the Work.

Contractor has carefully studied all reports of explorations and tests of subsurface conditions at or contiguous to the site and all drawings of physical conditions in or relating to existing surface or subsurface structures at or contiguous to the site (except underground facilities) which have been identified in the Bid Documents. Bidder acknowledges that such reports and drawings are not Contract Documents and may not be complete for Bidder's purposes. Bidder acknowledges that Owner and Engineer do not assume

responsibility for the accuracy or completeness of information and data shown or indicted in the Project Documents with respect to underground facilities at or contiguous to the site. Bidder has obtained and carefully studied (or assumes responsibility for having done so) all such additional or supplementary examinations, investigations, explorations, tests, studies, and data concerning conditions (surface, subsurface, and underground facilities) at or contiguous to the site or otherwise which may affect cost progress, performance or furnishing of the Work or which relate to any aspect of the means, methods, techniques, sequences, and procedures of construction to be employed by Bidder and safety precautions and programs incident thereto. Bidder does not consider that any additional examinations, investigations, explorations, tests, studies or data are necessary for the determination of this Bid for performance and furnishing of the Work in accordance with the times, price, and other terms and conditions of these Documents.

(e) Contractor is aware of the general nature of Work to be performed by Owner and others at the site that relates to Work for which this Bid is submitted as indicated in these documents.

(f) Contractor has correlated the information known to Bidder, information and observation obtained from visits to the site, reports and drawings identified in these documents and all additional examinations, investigations, explorations, tests, studies, and data with these documents.

(g) Contractor has given Engineer written notice of all conflicts, errors, ambiguities or discrepancies that Contractor has discovered in these documents and the written resolution thereof by Engineer is acceptable to Contractor, and these documents are generally sufficient to indicate and convey understanding of all terms and conditions for performing and furnishing the Work for which this Bid is submitted.

(h) This Bid is genuine and not made in the interest of or on behalf of any undisclosed person, firm, or corporation and is not submitted in conformity with any agreement or rules of any group, association, organization, or corporation; Contractor has not directly or indirectly induced or solicited any other Contractor to submit a false or sham Bid; Contractor has not solicited or induced any person, firm or corporation to refrain from Project; and Contractor has not sought by collusion to obtain for itself any advantage over any other Contractor or over Owner.

4. Contractor will complete the Work in accordance with these documents for the price found in the Bid Schedule:

Contractor acknowledges that quantities are not guaranteed and final payment will be based on actual quantities determined as provided in these documents.

The description under each bid item, being briefly stated, implies, although it does not mention, all incidentals and that the prices stated are intended to cover all such work, materials and incidentals as constitute Bidder's obligations as described in the Specifications, and any details not specifically mentioned, but evidently included in the Contract shall be compensated for in the item which most logically includes it.
Unit prices shall include all sales taxes, and other applicable taxes and fees.

5. **Contract Time**: Contractor agrees that Work will be substantially complete **350** calendar days after the date when the Contract Time commences to run, and will be completed and ready for final payment in within **380** calendar days after the date when the Contract Time commences to run.

Liquidated Damages: Contractor accepts the provisions of the Agreement as to liquidated damages identified in the Okaloosa County Standard Clauses, in the event of failure to achieve substantial complete of the Work within the Substantial Completion time and achieve final completion of the work within the

Final Completion time as specified in the Agreement..

The following documents are attached to and made a condition of this Bid:

Bid Schedule (Pages BF-7.1 thru BF-7.4)

Bid Affidavit

Bid Security as required by the Instructions to Contractors in the form of a certified or bank check made payable to The Board of County Commissioners of Okaloosa County or a Bid Bond on form attached, issued by a surety in the form of a cashier's check, certified check or bond.

Required Contractor's Qualification Statement with supporting data.

Performance of Work by Subcontractors

Form of Noncollusion Affidavit

Certification of Non-Segregated Facilities

Public Entity Crimes

Certificate as to Corporate Principal

Certified Copy of Resolution of Board of Directors

Conflict of Interest Disclosure Form

Drug-Free Workplace Certification

Certification of Contractor Regarding Trench Safety

Indemnification and Hold Harmless

Insurance Compliance

Affidavit – Worker's Compensation

Recycled Content Form

Disadvantaged Business Enterprise Program

DBE Certificate of Compliance Form

E-Verify Compliance Certification

Cone of Silence

Buy American Certificate

Lobbying – 31 USC 1352

Equal Employment Opportunity Report Statement

Vendors On Scrutinized Companies Lists

Indemnification and Hold Harmless

Conflict of Interest

System Awards Management

Anti-Collusion Statement

Government Debarment and Suspension

8. Communications concerning this Bid shall be addressed to the address of Bidder indicated below.

_____

_____

_____

_____

_____

9. Terms used in this Bid which are defined in the Instructions to Contractors will have the meanings indicated in the Instructions.

10. Contractor acknowledges that the Basis of Award shall be the Total Bid Amount, price and other factors considered. The bid bond amount shall be in the amount of the Total Bid Amount.

SUBMITTED on _____ , 20___

State Contractor License No. _____

If Contractor is:

An Individual

By _____ (SEAL)
(Individual's Name)
doing business as _____
Business address: _____

_____

Phone No.: _____

A Partnership

By _____(SEAL)
(Firm Name)
_____
(General Partner)
Business address: _____

_____

Phone No.: _____

A Corporation

By _____(SEAL)
(Corporation Name)
_____
(State of Incorporation)
By _____(SEAL)
(Name of person authorized to sign)
_____
(Title)

(Corporate Seal)

Attest _____
(Secretary)
Business address: _____

_____

Phone No.: _____

Date of Qualification to do business is _____

A Joint Venture

By _____ (SEAL)

(Name)

_____

(Address)

By _____ (SEAL)

(Name)

_____

(Address)

Phone Number and Address for receipt of official communications

_____

_____

(Each joint venturer must sign. The manner of signing for each individual, partnership and corporation that is a party to the joint venture should be in the manner indicated above).

Bid Schedule
Construct West Apron Expansion and Infrastructure at VPS
Destin - Fort Walton Beach Airport

Item No.	Spec. No.	Item Description	Quantity	Unit	Unit Price	Amount
1	C-105	Mobilization	1	LS		
2	01210-1	Bid Allowance 1: For the purchase, delivery and installation of one new intercom system for the west gate, 2-360 degree security cameras mounted on light poles in the credit card parking lot and 2 -360 degree security cameras mounted on high mast light poles in the west apron expansion. Includes integration with Air Operations Center (AOC) communications and security system	1	LS	$25,000.00	$25,000.00
3	01210-2	Bid Allowance 2: For the purchase, delivery and installation of a flush station on the OCWS 20" water main as detailed in the plans. Includes 20" water line, fittings, valves and concrete pad.	1	LS	$67,000.00	$67,000.00
4	01210-3	Bid Allowance 3: For Okaloosa County Permit Fees	1	LS	$5,000.00	$5,000.00
4	01530	Temporary Barricades and Barricade Lights	1	LS		
5	01720	Project Record Documents	1	LS		
6	S-140-1	Full Depth Asphalt Pavement Removal	9,052	SY		
7	S-140-2	Asphalt Surface Course Removal	773	SY		
8	S-140-3	Concrete Pavement Removal	1,510	SY		
9	S-140-4	Remove 36" CMP Culvert	1	EA		
10	S-140-5	Remove Water Line Flush Facility, including 20” DIP Water Pipe with Stand Pipe, Concrete Box and Pad and Riprap Apron	1	LS		
11	S-140-6	Remove Chain Link Fence	2,306	LF		
12	S-140-7	Remove Chain Link Fence Slide Gate and operator	1	EACH		
13	S-140-8	Remove Sanitary Sewer Lift Station, including Valve Box and Control Panel	1	LS		
14	S-140-9	Remove Lav Cart Dump Facility, including Grinder Pump Station, Control Panel, Effluent Inlet Drain and Piping, and 2” Force main	1	LS		
15	S-140-10	Remove Sanitary Sewer Manhole	2			
16	S-140-11	Remove 2" PE Sanitary Sewer Force Main	755	LF		
17	S-140-12	Remove 6" PVC Sanitary Sewer Force Main	749	LF		
18	S-140-13	Remove 6" & 12” DIP Water Main	1,119	LF		
19	S-140-14	Remove Existing Riprap	1	LS		
20	S-140-15	Remove Existing Aluminum Shed	1	LS		
21	S-140-16	Remove Existing Masonry Building with Canopy	1	LS		
22	S-141	Asphalt Pavement Milling	982	SY		
23	S-142	Pavement Marking Removal	1,795	SF		
24	P-151-1	Clearing and Grubbing	6.0	AC		
25	P-151-2	Tree Removal	21	EA		
26	P-152-1	Unclassified Excavation	16,815	CY		
27	P-152-2	Pre-Construction Survey of Phase 1 and Phase 4 Limits of Grading	1	LS		
28	P-154-1	6" Subbase Course	50,580	SY		
29	P-209-1/P-211-1	Optional Base Course	20,417	SY		
30	P-209-2	6" Crushed Aggregate Base Course	18,774	SY		
31	P-304-1/P-306-1/ P-403-1	Optional Stabilized Base Course for PCC Pavement	695	SY		
32	P-304-2/P-403-2	Optional Stabilized Base Course for Asphalt Pavement	18,774	SY		
33	P-401	Asphalt Surface Course	4,725	TON		

Item No.	Spec. No.	Item Description	Quantity	Unit	Unit Price	Amount
34	FDOT-334	Type SP-12.5 Asphalt Surface Course	3,575	TON		
35	P-501-1	18.75" Concrete Pavement	695	SY		
36	P-602	Emulsified Asphalt Prime Coat	7,608	GAL		
37	P-603	Emulsified Asphalt Tack Coat	2,681	GAL		
38	P-620-1	Non-Reflective Pavement Markings	11,071	SF		
39	P-620-2	Reflective Pavement Markings	9,221	SF		
40	P-620-3	Reflective Pavement Markings (Red Paint)	760	SF		
41	F-162-1	Chain Link Fence	2,133	LF		
42	F-162-2	Install High Density Polyethylene Slats in Existing Chain Link Fence	210	LF		
43	F-162-3	Temporary Chain Link Fence	2,948	LF		
44	F-162-4	Double Swing Gate (15' Opening)	4	EA		
45	F-165-1	Cantilever Slide Gate (15' Opening)	1	EA		
46	F-165-2	Cantilever Slide Gate (26' Opening)	1	EA		
47	F-165-3	Relocation of Existing Gate Operator and Power Rack	1	LS		
48	D-701-1	12 inch Class III RCP	33	LF		
49	D-701-2	12 inch Class V RCP	68	LF		
50	D-701-3	12 inch DIP	85	LF		
51	D-701-4	12 inch DIP in Existing PCC Pavement	62	LF		
52	D-701-5	18 inch Class III RCP	534	LF		
53	D-701-6	18 inch Class V RCP	283	LF		
54	D-701-7	24 inch Class III RCP	546	LF		
55	D-701-8	24 inch Class V RCP	107	LF		
56	D-701-9	30 inch Class V RCP	391	LF		
57	D-701-10	36 inch Class V RCP	306	LF		
58	D-701-11	42 inch Class V RCP	153	LF		
59	D-701-12	54 inch Type S CPP	244	LF		
60	D-751-1	Type C Inlet	9	EA		
61	D-751-2	Type D Inlet	1	EA		
62	D-751-3	Type 4 Airfield Inlet	1	EA		
63	D-751-4	Trench Drain in Existing PCC Pavement	20	LF		
64	D-751-5	Airfield Trench Drain	551	LF		
65	D-751-6	Airfield Trench Drain Inlet	6	EA		
66	D-751-7	Airfield Storm Drain Manhole	6	EA		
67	D-751-8	Standard Storm Drain Manhole	3	EA		
68	D-751-9	MES (4:1) for 24 inch RCP	1	EA		
69	D-751-10	MES (4:1) for 18 inch RCP	3	EA		
70	D-751-11	Concrete Flared End Section for 54" Pipe	1	EA		
71	FDOT-520	Concrete Curb, Type D	2,938	LF		
72	FDOT-522	4" Concrete Sidewalk	351	SY		
73	FDOT-530	Rubble Riprap	342	SY		
74	FDOT-570-1	Sodding	2,377	SY		
75	FDOT-570-2	Performance Turf	13,180	SY		
76	FDOT-700-1	Stop Sign and Post	6	EA		
77	FDOT-700-2	18"x24" Sign Panel Mounted on Light Pole or Column	24	EA		

Item No.	Spec. No.	Item Description	Quantity	Unit	Unit Price	Amount
78	FDOT-700-3	Single Face ADA Accessible Parking Space Sign	2	EA		
79	FDOT-700-4	Double Face ADA Accessible Parking Space Sign	2	EA		
80		Bollards	6	EA		
81	T-905	Topsoil	4,862	CY		
82	02606-1	Standard Sanitary Sewer Manhole	3	EA		
83	02606-2	Aircraft Rated Sanitary Sewer Manhole	3	EA		
84		Lavatory Cart Dump Station Inlet, including concrete apron and 6" PVC Riser and Fittings	2	LS		
85	15051-1	8" PVC Gravity Sanitary Sewer Pipe	1,188	LF		
86	15051-3	2” PVC Force Main	80	LF		
87	15051-4	6” PVC Force Main	125	LF		
88	15051-5	6” DIP Water Main	94	LF		
89	15051-6	12” DIP Water Main	1,275	LF		
90	15051-7	1" Polyethylene (HDPE) Tubing	260	LF		
91	15100-1	Fire Hydrant & Gate Valve Assembly	4	EA		
92	15100-2	Hose Bib Assembly to include concrete filled steel bollard pipe, water line riser pipe, hose rack and painting of the base post, complete and in place	2	EA		
93	15100-3	6" Gate Valve	3	EA		
94	15100-4	12" Gate Valve	3	EA		
95	32 33 17	Wastewater Lift Station	1	LS		
96		Pre- Emergent Herbicide-2 applications & spot spray (mulch area	1	LS		
97		Tree - October Glory Maple 45 Gal. 10'-12' Ht. (includes staking)	8	EA		
98		Tree- Duraheat River Birch 45 Gal. 10'-12' Ht. (includes staking)	11	EA		
99		Tree- Little Gem Magnolia 45 Gal. 7'-8' Ht. (includes staking)	9	EA		
100		Tree- Sand Live Oak 2" Cal min. 11'-12' Ht. (includes staking)	29	EA		
101		Tree- Shumard Oak 3" Cal. Min. 12'-14' Ht. (includes staking)	6	EA		
102		Centipede Sod- labor & material- irrigated areas per plan	42,044	SF		
103		Centipede Sod Unit Price- for additional disturbed areas if	1	SF		
104		Pinestraw Mulch for Tree Circles	1	LS		
105		Hardscape- Fido & Me Fountain Ultrasite-PBARK-498 w/ Labor	1	EA		
106		Hardscape-6 Ft. Bench Ultrasite-PBARK-940S-P6 w/ Labor	2	EA		
107		Hardscape- Trash Receptacle Ultrasite PL-32, FTR-32-08, IG	2	EA		
108		Hardscape- Pet Waste Station Ultrasite PBARK-488, IG KIT w/	1	EA		
109		Hardscape- 8'x8' Cantilevered Umbrella Ultrashade M-Shade w/	1	EA		
110		Hardscape- "*Pet Relief Area"* Post Sign 5'-6' O.A. Ht. w/ Labor	2	EA		
111		Maintenance- 1 Year Maintenance & Warranty		LS		
112		Covered Walkway (Includes Canopy Structure, Foundations, Walkway Lighting and 4" Sidewalk)	1	LS		
113	L-105-1	Electrical Demolition	1	LS		
114	L-108-1	Cable - L-824 5kV, #8 AWG Type C	2640	LF		
115	L-108-2	Counterpoise with Conduit/Duct	1305	LF		
116	L-110-1	1W-2" PVC Direct-Bury	490	LF		
117	L-110-2	1W-2" PVC Concrete-Encased	815	LF		
118	L-125-1	High Mast Light Pole & Foundation	6	EA		
119	L-125-2	High Mast Fixture	12	EA		

Bid Schedule
Construct West Apron Expansion and Infrastructure at VPS
Destin - Fort Walton Beach Airport

Item No.	Spec. No.	Item Description	Quantity	Unit	Unit Price	Amount
120	L-125-3	Elevated LED MITLs	6	EA		
121	L-260521	Panelboard Modifications	1	LS		
122	L-260521	GSE Rack & Power Center	1	LS		
123	L-260521	Fiber Optic Cable	330	LF		
124	L-260521	Cat-6 Cable	140	LF		
125	L-260521	2-#12 AWG THWN-2, W/G	660	LF		
126	L-260521	2-#10 AWG THWN-2, W/G	6090	LF		
127	L-260521	#10 AWG GND	230	LF		
128	L-260521	#6 AWG THWN-2	460	LF		
129	L-260521	#2 AWG THWN-2	2100	LF		
130	L-260521	#2 AWG GND	50	LF		
131	L-260521	#1 AWG THWN-2	4960	LF		
132	L-260521	#1 AWG GND	1240	LF		
133	L-260521	3/4" PVC in Canopy Structure	500	LF		
134	L-260541	1" PVC CE Under Pavement	3820	LF		
135	L-260541	1" PVC DB in Soil	2020	LF		
136	L-260541	2" PVC DB in Soil	180	LF		
137	L-260541	2-1/2" PVC DB in Soil	1250	LF		
138	L-260541	13"x24" Handholes	19	EA		
139	L-260541	12"x12" Handholes	2	EA		
140	L-265600	Parking Fixture, Pole and Foundation	34	EA		
141	L-265600	Wall-Mount, Bus Stations	4	EA		
142	L-265600	Canopy Lights	26	EA		
143	L-330523	Directional Bore, 1W-2"dia.	650	LF		

TOTAL AMOUNT BID:	

****If a bidder would like to have a copy of this bid sheet in Excel format, please email vtaravella@myokaloosa.com or dmason@myokaloosa.com to request a copy.****

FOR ALL WORK REQUIRED IN ACCORDANCE WITH THE CONSTRUCTION DRAWINGS, SPECIFICATIONS AND OTHER CONTRACT DOCUMENTS, INCLUDING ALL COSTS RELATED TO THE WORK, AND ANY REQUIRED PERMITS, TAXES, BONDS AND INSURANCE, THE UNDERSIGNED SUBMITS A TOTAL BID AMOUNT OF:

TOTAL BID (amount in words):

_____Dollars and

_____cents

($_____)
(amount in numbers)

The Contractor represents that it has examined the site of the Work and informed itself fully in regard to all conditions pertaining to the place where the work is to be done; that it has examined the plans and specifications for the work and other Contract Documents relative thereto and has read all of the Addenda furnished prior to the opening of the Bids, as acknowledged below; and that it has otherwise fully informed itself regarding the nature, extent, scope and details of the Work to be performed.

If provided with a Notice of Intent to Award the Contract by the Owner, the Contractor shall execute and deliver to the Owner all of the documents required by the Contract Documents, including but not limited to, the Addendum to the Agreement and the Performance and Payment Bonds in the form contained in the Contract Documents, furnish the required evidence of the specified insurance coverages, furnish all necessary permits, license, materials, equipment, machinery, maintenance, tools, apparatus, means of transportation and labor necessary to complete the Work.

Dated and signed at _____, _____, this _____ day of _____, 2019.

_____
(Name of Bidder)

_____
(Authorized Signature)

_____
(Title)

_____
(Mailing Address)

_____
(City, State, Zip)

_____
(Federal ID No. or SS No.)

Page Intentionally Left Blank

BID AFFIDAVIT

The following affidavit must be executed in order that your quotation may be considered.

STATE OF _____

COUNTY OF _____

_____ of lawful age, being first duly sworn, upon his oath deposes and says: That he executed the accompanying Quotation of behalf of the Contractor therein named, and that he had lawful authority so to do, and said Contractor has not directly or indirectly, entered into any agreement, expressed or implied, with any Contractor or Contractors, having to its object the controlling of the price or amount of such quotation or any quotations, the limiting of the Quotation or Contractors, the parceling or farming out to any Contractor or Contractors, to other persons of any part of the contract or any of the subject matter or the Quotations, or of the profits thereof, and that he has not and will not divulge the sealed Quotation to any person whomsoever, except those having a partnership or other financial interest with him in said Quotation or Quotations, until after the sealed Quotation or Quotations are opened.

_____
[signature]

_____
[date]

STATE OF_____COUNTY OF _____

PERSONALLY APPEARED BEFORE ME, the undersigned authority,

[name of individual signing]

who, after first being sworn by me, affixed his/her signature in the space provided above on this____day of _____, 20___.

Subscribed and sworn to before me this_____day of_____, 20_.

My Commission Expires:

_____ _____
Notary Public

Page Intentionally Left Blank

BID BOND

CONTRACTOR *(Name and Address):*

_____
_____
_____

SURETY *(Name and Address of Principal Place of Business)*:

_____
_____
_____

OWNER *(Name and Address)*:

Okaloosa County
602 N. Pearl Street
Crestview, FL 32536

BID:

BID DUE DATE: _____
PROJECT *(Brief Description Including Location):* _____
CONSTRUCT WEST APRON EXPANSION AND INFRASTRUCTURE AT VPS
Destin – Fort Walton Beach Airport, Okaloosa County, FL

BOND:

BOND NUMBER: _____
DATE: *(Not later than Bid Due Date):* _____
PENAL SUM: _____

IN WITNESS WHEREOF, Surety and Contractor, intending to be legally bound hereby, subject to the terms printed on the reverse side hereof, do each cause this Bid bond to be duly executed on its behalf by its authorized officer, agent, or representative.

CONTRACTOR	SURETY
_____ (Seal)	_____ (Seal)
Contractor's Name and Corporate Seal	Surety's Name and Corporate Seal
By: _____	By: _____
Signature and Title	Signature and Title (Attach Power of Attorney)
Attest: _____	Attest: _____
Signature and Title	Signature and Title

Note:
(1) Above addresses are to be used for giving required notice.
(2) Any singular reference to Contractor, Surety, Owner or other party shall be considered plural where applicable.

EJCDC NO. 1910-28-C (1990 Edition)

1. Contractor and Surety, jointly and severally, bind themselves, their heirs, executors, administrators, successors and assigns to pay to OWNER upon default of Contractor the penal sum set forth on the face of this Bond.

2. Default of Contractor shall occur upon the failure of Contractor to deliver within the time required by the Project Documents the executed Agreement required by the Project Documents and any performance and payment bonds required by the Project Documents and Contract Documents.

3. This obligation shall be null and void if:

3.1. OWNER accepts Contractor's Bid and Contractor delivers within the time required by the Project Documents (or any extension thereof agreed to in writing by OWNER) the executed Agreement required by the Project Documents and any performance and payment bonds required by the Project Documents and Contract Documents, or

3.2 All Bids are rejected by OWNER, or

3.3 OWNER fails to issue a notice of award to Contractor within the time specified in the Project Documents (or any extension thereof agreed to in writing by Contractor and, if applicable, consented to by Surety when required by paragraph 5 hereof).

4. Payment under this Bond will be due and payable upon default of Contractor and within 30 calendar days after receipt by Contractor and Surety of written notice of default from OWNER, which notice will be given with reasonable promptness, identifying this Bond and the Project and including a statement of the amount due.

5. Surety waives notice of and any and all defenses based on or arising out of any time extension to issue notice of award agreed to in writing by OWNER and Contractor, provided that the time for issuing notice of award including extensions shall not in the aggregate exceed 120 days from Bid Due Date without Surety's written consent.

6. No suit or action shall commenced under this Bond prior to 30 calendar days after the notice of default required in paragraph 4 above is received by Contractor and Surety, and in no case later than one year after Bid Due Date.

7. Any suit or action under this Bond shall be commenced only in a court of competent jurisdiction located in the state in which the Project is located.

8. Notice required hereunder shall be in writing and sent to Contractor and Surety at their respective addresses shown on the face of this Bond. such notices may be sent by personal deliver, commercial courier or by United States Registered or Certified Mail, return receipt requested, postage pre-paid, and shall be deemed to be effective upon receipt by the party concerned.

9. Surety shall cause to be attached to this Bond a current and effective Power of Attorney evidencing the authority of the officer, agent or representative who executed this Bond on behalf of Surety to execute, seal and deliver such Bond and bind the Surety thereby.

10. This Bond is intended to conform to all applicable statutory requirements. Any applicable requirement of any applicable statute that has been omitted form this Bond shall be deemed to be included herein as if set forth at length. If any provision of any Bond conflicts with any applicable provision of any applicable statute, then the provision of said statute shall govern and the remainder of this Bond that is not in conflict therewith shall continue in full force and effect.

11. The term "Bid" as used herein includes a Bid, offer, or proposal as applicable.

CONTRACTOR'S QUALIFICATION QUESTIONNAIRE

The undersigned guarantees the accuracy of all statements and answers herein contained. (Please print in ink).

1. How many years has your firm been in business as a Contractor?

2. List up to three (3) projects of this nature that you have completed in the last three (3) years, and give the name, address and telephone number of a reference from each. Also give the completion date, the original contract bid price and the completed cost of each project listed.

3. List projects presently under construction by your firm the dollar volume of the contract and the percentage completion of the contract.

4. Have you ever failed to complete work awarded to you; if so, state where and why.

5. Do you plan to sublet any part of this work? If so, give details.

6. What equipment do you own that is available for this work?

7. What equipment do you plan to rent or purchase for this work?

8. Have you ever performed work under the direction of a Professional Engineer or Registered Architect? If so, list up to three (3) such firms giving the name of the firm, its address, telephone number and the name of the project. (List most recent projects).

9. Give the name, address and telephone number of an individual who represents each of the following and whom the Owner may contact to investigate your financial responsibility: a surety, a bank, and a major material supplier.

10. Provide a financial statement for your company. This should include a balance and income statement for your most recent fiscal year. A certified audit is preferred but not required. Use an insert sheet, if needed. Only three (3) lowest bidders shall submit this information (if requested by Owner) to the Owner within two (2) business days of the opening of the Bids.

11. State the true, exact, correct and complete name of the partnership, corporation or trade name under which you do business, and the address of the place of business. (If a corporation, state the name of all partners. If a trade name, state the names of the individuals who do business under the trade name.) It is absolutely necessary that information be furnished.

_____

Correct Name of Contractor _____

(a) The business is a _____

(b) The address of principal place of business is:

_____

_____

(c) The names of the corporate officers, or partners, or individuals doing business under a trade name, are as follows:

_____

_____

_____

_____

PERFORMANCE OF WORK BY SUBCONTRACTORS

The CONTRACTOR hereby states that he proposes, if awarded the Contract, to use the following subcontractors on this project: List below all proposed subcontractors and trade specialties. (List only one subcontractor for each item.)

	Items of Work (Describe)	**Subcontractors**
1		
2		
3		
4		
5		
6		
7		
8		
9		
10		
11		
12		
13		
14		
15		

Estimated Total Cost of Items that CONTRACTOR states will be performed by Subcontractor:

($_____)

Page Intentionally Left Blank

FORM OF NONCOLLUSION AFFIDAVIT

(This Affidavit is Part of Bid)

STATE OF _____

COUNTY OF _____

_____Being

first duly sworn, deposes and says that he is

_____(Sole owner, a partner, president, secretary, etc.) of

_____ the party making the foregoing Proposal or BID that such BID is genuine and not collusive or sham; that said CONTRACTOR has not colluded, conspired, connived, or agreed, directly or indirectly, with any CONTRACTOR or person, to put in a sham BID, or that such other person shall refrain from the project, and has not in any manner, directly or indirectly sought by agreement or collusion, or communication or conference, with any person, to fix the Bid Price of affiant or any other CONTRACTOR, or to fix any overhead, profit or cost element of said Bid Price, or of that of any other CONTRACTOR, or to secure any advantage against OWNER any person interested in the proposed Contract; and that all statements in said Proposal or Bid are true; and further, that such CONTRACTOR has not, directly or indirectly submitted this BID, or the contents thereof, or divulged information or date relative thereto to any association or to any member or agent thereof.

_____(Contractor)

Sworn to an subscribed before me this _____ day of

_____, 20___.

Notary Public in and for

_____ County,

_____.

My Commission Expires:

_____, 20___.

Page Intentionally Left Blank

CERTIFICATION OF NON-SEGREGATED FACILITIES

(Must be completed and submitted with the Bid)

The Contractor certifies that it does not maintain or provide for its employee any segregated facilities at any segregated facilities at any of its establishments, and that it does not permit its employees to perform their services at any location under its control where segregated facilities are maintained. The Contractor certifies further that it will not maintain or provide for its employees segregated facilities at any of its establishments, and that it will not permit its employees to perform their services at any location under its control where segregated facilities are maintained. The Contractor agrees that a breach of this certification is a violation of the equal opportunity clause in this contract. As used in this certification, the term "segregated facilities" means any waiting room, work areas, restrooms and washrooms, restaurants and other eating areas, parking lots, drinking fountains, recreation or entertainment areas, transportation and housing facilities provided for employees which are segregated by explicit directive or are in fact segregated on basis of race, color, religion, or national origin, because of habit, local custom, or any other reason. The Contractor agrees that (except where it has obtained identical certification from proposed subcontractors for the specific time period) it will obtain identical certifications from proposed subcontractors prior to the award of subcontracts exceeding $10,000 which are not exempt from the provisions of the equal opportunity clause, and that it will retain such certification in its files.

_____

(Name of Contractor)

By: _____

Title: _____

Dated: _____

Page Intentionally Left Blank

SWORN STATEMENT UNDER SECTION 287.133 (3) (a), FLORIDA STATUTES, ON PUBLIC ENTITY CRIMES

THIS FORM MUST BE SIGNED AND SWORN IN THE PRESENCE OF A NOTARY PUBLIC OR OTHER OFFICIAL AUTHORIZED TO ADMINISTER OATHS.

1. This sworn statement is submitted to _____
[print name of public entity]

by _____
[print individuals name and title]

for _____
[print name of entity submitting sworn statement]

whose business is _____ and (if applicable) its Federal Employer Identification Number (FEIN) is _____ (If the entity has no FEIN, include the Social Security Number of the individual signing this sworn statement: ____.)

2. I understand that a "public entity crime" as defined in Section 287.133 (1) (g), Florida Statutes, means a violation of any state or federal law by a person with respect to and directly related to the transaction of business with any public entity or with an agency or political subdivision of any other state or of the United States, including, but not limited to, any bid or contract for goods or services to be provided to any public entity or an agency or political subdivision of any other state or of the United States and involving antitrust, fraud, theft, bribery, collusion, racketeering, conspiracy, or material misrepresentation.

3. I understand that "convicted" or "conviction" as defined in Section 287.133 (1) (b), Florida Statutes, means a finding of guilt or a conviction of a public entity crime, with or without an adjudication of guilt, in any federal or state trial court of record relating to charges brought by indictment or information after July 1, 1989, as a result of a jury verdict, non-jury trial, or entry of a plea of guilty or nolo contendere.

4. I understand that an "affiliate" as defined in Section 287.133 (1) (a), Florida Statutes, means:

   A. A predecessor or successor of a person convicted of a public entity crime; or

   B. An entity under the control of any natural person who is active in the management of the entity and who has been convicted of a public entity crime. The term "affiliate" includes those officers, directors, executives, partners, shareholders, employees, members and agents who are active in the management of an affiliate. The ownership by one person of shares constituting a controlling interest in another person, or a pooling of equipment or income among persons when not for fair market value under an arm's length agreement, shall be a prima facie case that one person controls another person. A person who knowingly enters into a joint venture with a person who has been convicted of a public entity crime in Florida during the preceding 36 months shall be considered an affiliate.

5. I understand that a "person" as defined in Section 287.133 (1) (e) Florida Statutes, means any natural person or entity organized under the laws of any state or of the United States with the legal power to enter into a binding contract and which bids or applies to bid on contracts for the provision of goods or services let by a public entity, or which otherwise transacts or applies to transact business with a

public entity. The term "person" includes those officers, directors, executives, partners, shareholders, and employees, members, and agents who are active in management of an entity.

6. Based on information and belief, the statement which I have marked below is true and in relation to the entity submitting this sworn statement. **[Indicate which statement applies.]**

___ Neither the entity submitting this sworn statement, nor any of its officers, directors, executives, partners, shareholders, employees, members, or agents who are active in the management of the entity, nor any affiliate of the entity has been charged with and convicted of a public entity crime subsequent to July 1, 1989.

___ The entity submitting this sworn statement, or one or more of its officers, directors, executives, partners, shareholders, employees, members, or agents who are active in the management of the entity, or an affiliate of the entity has been charged with and convicted of a public entity crime subsequent to July 1, 1989.

___ The entity submitting this sworn statement, or one or more of its officers, directors, executives, partners, shareholders, employees, members, or agents who are active in the management of the entity, or an affiliate of the entity has been charged with and convicted of a public entity crime subsequent to July 1, 1989. However, there has been a subsequent proceeding before a Hearing Officer of the State of Florida, Division of Administrative Hearings and the Final Order entered by the Hearing Officer determined that it was not in the public interest to place the submitting this sworn statement on the convicted vendor list. **[attach a copy of the final order]**

I UNDERSTAND THAT THE SUBMISSION OF THIS FORM TO THE CONTRACTING OFFICER FOR THE PUBLIC ENTITY IDENTIFIED IN PARAGRAPH 1 (ONE) ABOVE IS FOR THAT PUBLIC ENTITY ONLY AND, THAT THIS FORM IS VALID THOROUGH DECEMBER 31 OF THE CALENDAR YEAR IN WHICH IT IS FILED. I ALSO UNDERSTAND THAT I AM REQUIRED TO INFORM THE PUBLIC ENTITY PRIOR TO ENTERING INTO A CONTRACT IN EXCESS OF THE THRESHOLD AMOUNT PROVIDED IN SECTION 287.107, FLORIDA STATUTES FOR CATEGORY TWO ON ANY CHANGE IN THE INFORMATION CONTAINED IN THIS FORM.

_____
[signature]

_____
[date]

STATE OF_____COUNTY OF _____

PERSONALLY APPEARED BEFORE ME, the undersigned authority,

[name of individual signing]

who, after first being sworn by me, affixed his/her signature in the space provided above on this _____day of_____, 20___.

Subscribed and sworn to before me this_____day of_, 20_.

My Commission Expires:

_____ _____
Notary Public

Page Intentionally Left Blank

CERTIFICATE AS TO CORPORATE PRINCIPAL

I,_____, certify that I am the Secretary of the Corporation named as Principal in the within bond; that_____who signed the bond on behalf of the Principal, was then _____ of said Corporation; that I know his/her signature, and his/her signature hereto is genuine; and that said bond was duly signed, sealed, and attested for and in behalf of said Corporation by authority of its governing body.

_____
Secretary (Corporate Seal)

STATE OF FLORIDA
COUNTY OF

Before me, a Notary Public, duly commissioned, qualified and acting, personally appeared _____ to me well known, who being my first duly sworn upon oath, says that he/she is the Attorney-in-Fact, for the_____and that he has been authorized by_____to execute the foregoing bond on behalf of the Contractor named therein in favor of Okaloosa County.

Subscribed and sworn to before me this_day of__, 20__, A.D.

[Attach Power of Attorney to Original Bid Bond and Financial Statement from Surety Company]

_____

Notary Public
State of Florida-at-Large

My commission Expires:

_____

CERTIFIED COPY OF RESOLUTION OF
BOARD OF DIRECTORS OF

_____
(NAME OF CORPORATION)

"RESOLVED that, _____
(Person Authorized to Sign) (Title)
(Title)

of _____
(Name of Corporation)

is authorized to sign and submit the Bid of this corporation for the following Project:

CONSTRUCT WEST APRON EXPANSION AND INFRASTRUCTURE AT VPS

and to include in such bid the certificate as to non-collusion, and for any inaccuracies or misstatements in such certificate this corporate Contractor shall be liable under the penalties of perjury.

The foregoing is a true and correct copy of the resolution adopted by

_____
(NAME OF CORPORATION)

at a meeting of its Board of Directors held on the_____ day of _____, 20__.

By _____

Title _____

(SEAL)

The above form must be completed if the Contractor is a Corporation.

CONFLICT OF INTEREST DISCLOSURE FORM

For purposes of determining any possible conflict of interest, all contractors/proposers, must disclose if any Okaloosa Board of County Commissioner, employee(s), elected officials(s), or if any of its agencies is also an owner, corporate officer, agency, employee, etc., of their business.

Indicate either "yes" (a county employee, elected official, or agency is also associated with your business), or "no." If yes, give person(s) name(s) and position(s) with your business.

YES NO _____

NAME(S) POSITION(S)

_____

_____

_____

_____

FIRM NAME: _____

BY (PRINTED): _____

BY (SIGNATURE): _____

TITLE: _____

ADDRESS: _____

_____

PHONE NO.:_____

Page Intentionally Left Blank

DRUG-FREE WORKPLACE CERTIFICATION

THE BELOW SIGNED CONTRACTOR CERTIFIES that it has implemented a drug-free workplace program. In order to have a drug-free workplace program, a business shall:

1. Publish a statement notifying employees that the unlawful manufacture, distribution, dispensing, possession, or use of a controlled substance is prohibited in the workplace and specifying the actions that will be taken against employees for violations of such prohibition.

2. Inform employees about the dangers of drug abuse in the workplace, the business's policy of maintaining a drug-free workplace, any available drug counseling, rehabilitation and employee assistance programs, and the penalties that may be imposed upon employees for drug abuse violations.

3. Give each employee engaged in providing the commodities or contractual services that are under bid a copy of the statement specified in subsection 1.

4. In the statement specified in subsection 1, notify the employees that, as a condition of working on the commodities or contractual services that are under bid, the employee will abide by the terms of the statement and will notify the employer of any conviction of, or plea of guilty or nolo contendere to, to any violation of Chapter 893 or of any controlled substance law of the United States or any state, for a violation occurring in the workplace no later than five (5) days after such conviction.

5. Impose a sanction on, or require the satisfactory participation in drug abuse assistance or rehabilitation program if such is available in the employee's community, by any employee who is convicted.

6. Make a good faith effort to continue to maintain a drug-free workplace through implementation of this section.

As the person authorized to sign this statement, I certify that this firm complies fully with the above requirements.

DATE: _____

COMPANY: _____ SIGNATURE: _____

ADDRESS: _____ NAME: _____
(Typed or Printed)

_____

_____ TITLE: _____

PHONE #: _____

Page Intentionally Left Blank

CERTIFICATION OF CONTRACTOR REGARDING TRENCH SAFETY

This certification is required pursuant to the Trench Safety Act, Chapter90-98, Florida Statutes regarding Trench Safety. The Act specifically incorporates the Occupational Safety and Health Administration's excavation safety standards, 29 CFR S. 1928.650 Subpart P as the state standard. Any revision to OSHA's safety standards that are consistent with the Florida Statutes shall also be complied with upon its effective date. The act requires that any bidder or prospective contractor, or any of their proposed subcontractors, shall provide written assurance that the contractor will comply with the applicable trench safety standards

NAME AND ADDRESS OF CONTRACTOR (Include Zip Code)

1. Contractor agrees that he is aware of the Trench Safety Act and the requirements of the Act.

   Yes_____ No _____

2. Contractors agrees to comply with all applicable trench safety standards as set forth in the Act and as referenced in the Act.

   Yes_____ No _____

NAME AND TITLE OF SIGNER (Please Print or Type)

SIGNATURE_____ DATE _____

Page Intentionally Left Blank

INDEMNIFICATION AND HOLD HARMLESS

CONTRACTOR shall indemnify and hold harmless COUNTY, its officers and employees from liabilities, damages, losses, and costs including but not limited to reasonable attorney fees, to the extent caused by the negligence, recklessness, or intentional wrongful conduct of the CONTRACTOR and other persons employed or utilized by the CONTRACTOR in the performance of this Agreement.

_____	_____
Contractor's Company Name	Authorized Signature – Manual
_____	_____
Physical Address	Authorized Signature – Typed
_____	_____
Mailing Address	Title
_____	_____
Phone Number	FAX Number
_____	_____
Cellular Number	After-Hours Number(s)
_____	
Date	

Page Intentionally Left Blank

INSURANCE COMPLIANCE

This form is to be completed and signed the Contractor and by your insurance agent/carrier certifying that your policy either meets the insurance requirements (as specified in page BOC-2 to BOC-6) or that the insurance company has reviewed the bid requirements and certifies that you were bid any price increase due to required coverage.

CONTRACTOR

I certify that the insurance requirements have been reviewed.

Company Name _____

Address _____

Representative

Name _____

Title _____

Phone Number _____

INSURANCE COMPANY

I certify that the insurance requirements have been reviewed with the above contractor.

Company Name _____

Address _____

Representative

Name _____

Title _____

Phone Number _____

Page Intentionally Left Blank

AFFIDAVIT - WORKER'S COMPENSATION

State of _____

County of _____

SS:_____

of _____

being duly sworn, deposes and says that he now carries or that he has applied for a Worker's Compensation Policy to cover the operations, as set forth in the preceding contract, and to comply with the provisions thereof.

Signed: _____

Subscribed and sworn to before me this_____day of___, 20 ___

Notary Public

Page Intentionally Left Blank

RECYCLED CONTENT FORM

RECYCLED CONTENT INFORMATION:

1. Is the material in the above: VIRGIN_____or RECYCLED _____
   (Check the applicable blank)
   If RECYCLED, what percentage_____%.

2. Is your product packaged and/or shipped in material containing recycled content?

   Yes_____No_____

   Specify: _____
_____
_____
_____
_____

3. Is your product recyclable after it has reached its intended end use?

   Yes_____No_____

   Specify: _____
_____
_____
_____
_____

   The above is not applicable if there is only a personal service involved with no product involvement.

   Name of Contractor:

Page Intentionally Left Blank

DISADVANTAGED BUSINESS ENTERPRISE PROGRAM

The following bid condition applies to this Department of Transportation (DOT) assisted contract. Submission of a bid/proposal by a prospective contractor shall constitute full acceptance of these bid conditions.

1. **DEFINITION -** Disadvantaged Business Enterprise (DBE) as used in this contract shall have the same meaning as defined in 49 CFR Part 26.

2. **POLICY -** It is the policy of DOT that DBE's as: defined in 49 CFR Part 26 shall have the maximum opportunity to participate in the performance of contracts and subcontracts financed in whole or in part with Federal funds. Consequently, the DBE requirements of 49 CFR Part 26 apply to this contract.

3. **OBLIGATION -** The contractor agrees to ensure that DBE's as defined In 49 CFR Part 26 have the maximum opportunity to participate in the performance of contracts and subcontracts financed in whole or in part with Federal funds. In this regard, all contractors shall take all necessary and reasonable steps in accordance with 49 CFR Part 26 to ensure that DBE's have the maximum opportunity to compete for and perform contracts. Contractors shall not discriminate on the basis of race, color, national origin, or sex in the award and performance of DOT assisted contracts.

4. **COMPLIANCE-**Allbidders,potentialcontractors,orsubcontractorsforthisDOT assisted contract are hereby notified that failure to carry out the DOT policy and the DBE obligation, as set forth above, shall constitute a breach of contract which may result in termination of the contract or such other remedy as deemed appropriate by the owner.

5. **CONTRACT CLAUSE -** All bidders and potential contractors hereby assure that they will include the above clauses in all subcontracts, which offer further subcontracting opportunities.

6. **CONTRACT AWARD -** Bidders are hereby advised that meeting the DBE subcontract goal or making an acceptable good faith effort to meet said goal are conditions of being awarded this DOT assigned contract.

   The owner proposes to award the contract to the lowest responsive and responsible bidder submitting a reasonable bid provided he has met the goal for DBE participation or, if failing to meet the goal, he has made an acceptable good faith effort to meet the established goal for DBE participation. Bidder is advised that the owner reserves the right to reject any or all bids submitted.

7. **DBE PARTICIPATION GOAL –**The attainment of the goal established for this contract is to be measured as a percentage of the total dollar value of the contract. The DBE goal established for this contract is **25.01%**

8. **AVAILABLE DBE'S –** The FDOT maintains an online searchable database of DBE firms at https://www3.dot.state.fl.us/equalopportunityoffice/biznet. This program contains listing of DBE's (certified and noncertified). Bidders are encouraged to inspect this list to assist in locating DBEs for the work. Other DBEs may be added to the list in accordance with the owner's approved DBE program. Credit toward the DBE goal will not be counted unless the DBE to be used can be certified by the owner.

9. **CONTRACTOR'S REQUIRED SUBMISSION -** The owner requires the submission of the

following information with the bid:

(DBE percentage should reflect price plus any alternates)

(BIDDER/FIRM NAME)_____

The undersigned, hereinafter called "Bidder", lists below the names of the DBE subcontractors who will perform the indicated scope of work for the amounts listed. DBE Goal is **25.01%**

Name, Address, and Telephone Number of DBE Subcontractor	Scope of Work	Dollar Amount of Subcontract
1. _____		
_____		
_____	_____	_____
2. _____		
_____		
_____	_____	_____
3. _____		
_____		
_____	_____	_____
4. _____		
_____		
_____	_____	_____

Only 60% of the dollars spent with a DBE Supplier will be counted toward participation in any category, and this amount can only satisfy 60% of the total needed to fulfill any goal.

Total DBE Dollars: $_____

Total Project Bid (includes alternates): $_____

DBE Percentage of Total Bid: _____%

If the Contractor fails to meet the contract goal established in Section 7 above, the following information

must be submitted with the bid to assist the owner in determining whether or not the contractor made acceptable good faith efforts to meet the contract goal. This information (when applicable), as well as the DBE information, should be submitted as specified in Section 9 above. Use the "Statement of Good Faith Efforts" form provided herein.

Suggested guidance for use in determining if good faith efforts were made by a contractor are included in 49 CFR Part 26.

A list of the efforts that a contractor may make and the owner may use in making a determination as to the acceptability of a contractor's efforts to meet the goal as included in 49 CFR Part 26 are as follows:

a. Whether the contractor attended any pre-solicitation or pre-bid meetings that were scheduled by the recipient to inform DBE's of contracting and subcontracting opportunities;

b. Whether the contractor advertised in general circulation, trade association, and minority-focus media concerning the subcontracting opportunities;

c. Whether the contractor provided written notice to a reasonable number of specific DBE's that their interest in the contract was being solicited in sufficient time to allow the DBE's to participate effectively;

d. Whether the contractor followed up initial solicitations of interest by contacting DBE's to determine with certainty whether the DBE's were interested;

e. Whether the contractor selected portions of work to be performed by DBE's in order to increase the likelihood of meeting the DBE goal (including, where appropriate, breaking down contracts into economically feasible units to facilitate DBE participation);

f. Whether the contractor provided interested DBE's with adequate information about the plans, specifications, and requirements of the contract;

g. Whether the contractor negotiated in good faith with interested DBE's, not rejecting DBE's as unqualified without sound reasons based on a thorough investigation of their capabilities.

h. Whether the contractor made efforts to assist interested DBE's in obtaining bonding, lines of credit, or insurance required by the recipient or contractor; and

i. Whether the contractor effectively used the services of available minority community organizations; minority contractors' groups; local and state Federal Minority Business Assistance Offices; and other organizations that provide assistance in the recruitment and placement of DBE's.

NOTE: The nine items set forth above are merely suggested criteria and the owner may specify that you submit information on certain other actions a contractor took to secure DBE participation in an effort to meet the goals. A contractor may also submit to the owner other information on efforts to meet the goals.

10. CONTRACTOR ASSURANCE - The bidder hereby assures that he will meet one of the following

as appropriate:

a. The DBE participation goal as established in the Section 7 on page BF-47.

b. The DBE participation percentage as shown in Section 9, which was submitted as a condition of contract award.

Agreements between bidder/proposer and a DBE in which the DBE promises not to provide subcontracting quotations to other bidders/proposers are prohibited. The bidder shall make a good faith effort to replace a DBE subcontract that is unable to perform successfully with another DBE subcontractor. Substitution must be coordinated and approved by the owner.

The bidder shall establish and maintain records and submit regular reports, as required, which will identify and assess progress in achieving DBE subcontract goals and other DBE affirmative action efforts.

11. PROMPT PAYMENT - The prime contractor agrees to pay each subcontractor under this prime contract for satisfactory performance of its contract no later than **10** days from the receipt of each payment the prime contractor receives from the owner. The prime contractor agrees further to return retainage payments to each subcontractor within **10** days after the subcontractor's work is satisfactorily completed. Any delay or postponement of payment from the above referenced time frame may occur only for good cause following written approval of the owner. This clause applies to both DBE and non-DBE subcontractors.

DBE CERTIFICATE OF COMPLIANCE FORM

The Florida Department of Transportation maintains an online searchable database of DBE firms at (https://www3.dot.state.fl.us/equalopportunityoffice/biznet).

Okaloosa County intends to utilize and implement this program in the awarding of this contract.

This is to certify that I have reviewed the plan, bid evaluation procedure, and DBE directory and will make all reasonable efforts to include DBE Contractors as outlined in this document.

_____ _____

Contractor's Signature Date

_____ _____

Title Notary Public

Page Intentionally Left Blank

DBE STATEMENT OF GOOD FAITH EFFORTS

BIDDER: _____

DATE: _____

This form is to be completed if bidder fails to achieve the DBE goals established for this project. The bidder is allowed to use an alternate method that demonstrates the good faith efforts made to meet the goals established as long as all of the requested information is included. Failure to include all requested information shall result in the bid being determined as nonresponsive to the DBE requirements.

The following list is not intended to be exclusive or exhaustive and the City will look not only at the different kinds of efforts the bidder has made, but also the quality, quantity, intensity and timeliness of those efforts. It is the responsibility of the bidder to exercise good faith efforts. Any act or omission by the City shall not relieve the bidder of this responsibility.

Criteria listed below are excerpted from Appendix A of 49 CFR93, as amended. A response is required to address each cited paragraph. Additional pages may be added as necessary.

1. **Attendance at Pre-Bid conference, if held**:

   ____ Yes ____ No ____ Not Held

2. **Whether and when the bidder provided written notice to all certified DBE's listed on the Florida Department of Transportation's BizNet website that perform the type of work to be subcontracted and advising the DBE's of the specific work the bidder intend to subcontract; that their interest in the contract is being solicited; and how to obtain information for the review and inspection of contract plans and specifications.**

All letters from bidders to prospective DBE subcontractors must be post marked or fax recorded a minimum of 12 calendar days prior to bid opening.

- Provide complete list of all DBE's solicited.

- Provide **DATE** letters were mailed (DBE's will be canvassed as to who sent them letters and what date they were received.) Provide a copy of solicitation and all other letters sent to DBE's. Recommended information in your solicitation letter can include, but not limited to, the following:
  - Project specific information.
  - Your willingness to assist with supply purchases.
  - Bonding requirements of your firm.
  - Any assistance your firm will be giving regarding bonding requirements, lines of credit and insurance requirements.
  - Availability of specifications and plans through your office.
  - Best time to reach you by phone (DBE firms will be canvassed regarding your responsiveness to their calls and project information they received from your firm.)
  - Bid opening date and all addendum information.
  - Your requirements/time frames/payment schedules.

Attachment 3.A may be used to record the information required to show compliance with this section.

3. **Whether the bidder selected feasible portions of work to be performed by DBE's, including, where appropriate, breaking contracts or combining elements of work into feasible units. The ability of the bidder to perform the work with its own work force will not in itself excuse a contractor from making positive efforts to meet the established goals.**

   If appropriate, detail any subcontracting category that you have broken down to assist DBE firms and list firms that have been made aware of this reduced scope.

Subcontracting Category	**DBE Firm**

4. **Whether the bidder considered all quotations received from DBE's and for those quotations not accepted, the bidder shall provide an explanation of why the DBE will not be used during the course of the contract. Receipt of lower quotation from non-DBE will not in itself excuse a bidder's failure to meet project goals.**

List all DBE firms who quoted this project; the amount quoted, and the successful subcontractor (if not the DBE firm) and their quote:

Name of DBE	**DBE's Quote vs.**	**Name of non-DBE Subcontractor Chosen**	**Subcontractor's Quote**

5. **Whether the bidder provided interested DBE's assistance in reviewing the contract plans and specifications.**

   Name the DBE firms provided assistance and describe how your firm provided such assistance.

6. **Whether the bidder assisted interested DBE firms in obtaining required bonding, lines of credit or insurance if such assistance was necessary.**

If the project was above $200,000 or exempt from the County's Bond Waiver Program, name the DBE's assisted and describe the assistance provided.

_____
_____
_____

7. **Whether the bidder advertised in general circulation, trade association, and/or minority/women - focus media concerning the subcontracting opportunities**

s.

List which papers carried your ad and attach a copy of the ad.

_____
_____
_____

8. **Whether the bidders followed up initial solicitations of interest by contacting DBE's to determine with certainty whether the DBE was interested.**

Name the DBE's you followed up with and describe your follow up efforts.

_____
_____
_____
_____

9. **Whether the bidder negotiated in good faith with interested DBE's, not rejecting DBE's as unqualified without sound reasons based on a thorough investigation of their capabilities.**

a) Provide a detailed statement of reasons why subcontracts were not entered into with a sufficient number of DBE's to meet the established goals.

_____
_____
_____

b) Provide a list of DBE subcontractors you deemed unqualified and provide an explanation for the construction you reached.

_____
_____
_____

c) For those DBE subcontractors contacted but determined to be unavailable, provide either:

i) a signed letter to the bidder from the DBE stating they are unavailable;

or

ii) a statement from the bidder that the DBE subcontractor refused to submit a letter after reasonable requests; and detailed statement from the Bidder of the reasons for the bidder's conclusion.

10. **Whether the bidder effectively used the services of available minority/women community organizations; minority/women contractors' groups; local, state and federal minority/women business assistance offices; and other organizations that provide assistance in the recruitment and placement of minority/women business enterprises.**

List minority/women organizations contacted.
(A minimum of three organizations must be contacted.)

Organization	**Person Contacted**	**Date Contacted**

11. **Whether the bidder has utilized DBE subcontractors on other County contracts within the past six months.**

List any local projects your firm has performed in the last six (6) months, the DBE subcontractors utilized and the dollar value of the DBE's subcontractor.

Project Name	**DBE Firms Used**	**Dollar Value**

12. **Describe any additional efforts or circumstances which may assist the City in Determining Good Faith Efforts.**

Page Intentionally Left Blank

E-VERIFY COMPLIANCE CERTIFICATION

In accordance with Okaloosa County Policy and Executive Order Number 11-116 from the office of the Governor of the State of Florida, Bidder hereby certifies that the U.S. Department of Homeland Security's E-Verify system will be used to verify the employment eligibility of all new employees hired by the contractor during the contract term, and shall expressly require any subcontractors performing work or providing services pursuant to the contract to likewise utilize the U.S. Department of Homeland Security's E-Verify system to verify the employment eligibility of all new employees hired by the subcontractor during the contract term; and shall provide documentation of such verification to the OWNER upon request.

As the person authorized to sign this statement, I certify that this company complies/will comply fully with the above requirements.

DATE:_____ SIGNATURE:_____

COMPANY:_____ NAME:_____
(Typed or Printed)

ADDRESS:_____ TITLE:_____

_____

EMAIL:_____

PHONE NO.:_____

Page Intentionally Left Blank

CONE OF SILENCE

The Board of County Commissioners have established a solicitation silence policy **(Cone of Silence)** that prohibits oral and written communication regarding all formal solicitations for goods and services (ITB, RFP, ITQ, ITN, and RFQ) or other competitive solicitation between the bidder (or its agents or representatives) or other entity with the potential for a financial interest in the award (or their respective agents or representatives) regarding such competitive solicitation, and any County Commissioner or County employee, selection committee member or other persons authorized to act on behalf of the Board including the County's Architect, Engineer or their subconsultants, or anyone designated to provide a recommendation to award a particular contract, other than the Purchasing Department Staff.

The period commences from the time of advertisement until all parties have signed the contract.

Any information thought to affect the committee or staff recommendation submitted after bids are due, should be directed to the Purchasing Manager or an appointed representative. It shall be the Purchasing Manager's decision whether to consider this information in the decision process.

Any violation of this policy shall be grounds to disqualify the respondent from consideration during the selection process.

All respondents must agree to comply with this policy by signing the following statement and including it with their submittal.

I_____(Signature) representing_____
(Company Name) on this _____ day of_____, 20_____hereby agree to abide by the County's "Cone of Silence Clause" and understand violation of this policy shall result in disqualification of my proposal/submittal.

Page Intentionally Left Blank

BUY AMERICAN CERTIFICATE

Except for those items listed by the Bidder below or on a separate and clearly identified attachment to this Bid, the Bidder hereby certifies that steel and each manufactured product, is produced in the United States and that components of unknown origin are considered to have been produced or manufactured outside the United States.

PRODUCT	COUNTRY OF ORIGIN

_____
(Name of Bidder)

By: _____

Title: _____

Dated: _____

Page Intentionally Left Blank

LOBBYING- 31 U.S.C. 1352, 49 CFR PART 19, 49 CFR PART 20

APPENDIX A, 49 CFR PART 20—CERTIFICATION REGARDING LOBBYING

Certification for Contracts, Grants, Loans, and Cooperative Agreements

The undersigned (Contractor) certifies, to the best of his or her knowledge and belief, that:

1. No Federal appropriated funds have been paid or will be paid, by or on behalf of the undersigned, to any person for influencing or attempting to influence an officer or employee of an agency, a Member of Congress, an officer or employee of Congress, or an employee of a Member of Congress in connection with the awarding of any Federal contract, the making of any Federal grant, the making of any Federal loan, the entering into of any cooperative agreement, and the extension, continuation, renewal, amendment, or modification of any Federal contract, grant, loan, or cooperative agreement.

2. If any funds other than Federal appropriated funds have been paid or will be paid to any person for making the lobbying contacts to an officer or employee of any agency, a Member of Congress, an officer or employee of Congress, or an employee of a Member of Congress in connection with this Federal contract, grant, loan, or cooperative agreement, the undersigned shall complete and submit Standard Form—LLL, "Disclosure Form to Report Lobbying," in accordance with its instructions [as amended by "Government wide Guidance for New Restrictions on Lobbying," 61 Fed. Reg. 1413 (1/19/96). Note: Language in paragraph (2) herein has been modified in accordance with Section 10 of the Lobbying Disclosure Act of 1995 (P.L. 104-65, to be codified at 2 U.S.C. 1601, et seq.)

3. The undersigned shall require that the language of this certification be included in the award documents for all subawards at all tiers (including subcontracts, subgrants, and contracts under grants, loans, and cooperative agreements) and that all subrecipients shall certify and disclose accordingly. This certification is a material representation of fact upon which reliance was placed when this transaction was made or entered into. Submission of this certification is a prerequisite for making or entering into this transaction imposed by 31, U.S.C. 1352 (as amended by the Lobbying Disclosure Act of 1995). Any person who fails to file the required certification shall be subject to a civil penalty of not less than $10,000 and not more than $100,000 for each such failure.

Note: Pursuant to 31 U.S.C. 1352(c)(1)-(2)(A), any person who makes a prohibited expenditure or fails to file or amend a required certification or disclosure form shall be subject to a civil penalty of not less than $10,000 and not more than $100,000 for each such expenditure or failure.

The Contractor,_____, certifies or affirms the truthfulness and accuracy of each statement of its certification and disclosure, if any. In addition, the Contractor understands and agrees that the provisions of 31 U.S.C. A 3801, *et seq, apply* to this certification and disclosure, if any.

_____Signature of Contractor's Authorized Official

_____Name and Title of Contractor's Authorized Official

_____ Date

Page Intentionally Left Blank

EQUAL EMPLOYMENT OPPORTUNITY REPORT STATEMENT

Section 60-1.7(b) of the Regulations of the Secretary of Labor requires each bidder or prospective prime Contractor and proposed Subcontractor, where appropriate, to state in the bid or at the outset of negotiations for the Contract whether it has participated in any previous Contract or Subcontract subject to the equal opportunity clause; and if so, whether it has filed with the Joint Reporting Committee, the Director, an agency, or the former President's Committee on Equal Employment Opportunity all reports due under the applicable filing requirements. In any case in which a bidder or prospective prime Contractor or proposed Subcontractor which participated in a previous Contract subject to Executive Order 10925, 11114 or 111246 has not filed a report due under the applicable filing documents, no Contract or Subcontract shall be awarded unless such Contractor submits a report covering the delinquent period or such other period specified by the FAA or the Director, OFCCP.

The Bidder (Proposer) shall complete the following statement by checking the appropriate boxes. Failure to complete these blanks may be grounds for rejection of bid.

1. The Bidder (Proposer) has ( ) has not ( ) developed and has on file at each establishment Affirmative Action Programs pursuant to 41 CFR 60-1.4 and 41 CFR 60-2.

2. The Bidder (Proposer) has ( ) has not ( ) participated in any previous Contract or Subcontract subject to the Equal Opportunity Clause prescribed by Executive Order 10925, or Executive Order 111114, or Executive Order 11246.

3. The Bidder (Proposer) has ( ) has not ( ) filed with the Joint Reporting Committee the annual compliance report on Standard Form 100 (EEO-1 Report).

4. The Bidder (Proposer) has (_) has not (_) submitted all compliance reports in connection with any such Contract due under the application filing requirements; and that representations indicating submission of required compliance reports signed by proposed Subcontractors will be obtained prior to award of Subcontractors.

5. The Bidder (Proposer) does ( ) does not ( ) employ fifty (50) or more employees.

If the Bidder (Proposer) has participated in a previous Contract subject to the equal opportunity clause and has not submitted compliance reports due under applicable filing requirements, the Bidder (Proposer) shall submit a compliance report on Standard Form 100. "Employee Information EEO-1" prior to the award of Contract.

Standard Form 100 is normally furnished to Contractors annually, based on a mailing list currently maintained by the Joint Reporting Committee. In the event a Contractor has not received the form, he may obtain it by writing to the following address: Joint Reporting Committee, 1800 G Street, Washington, D.C. 20506.

_____
Name of Bidder

By: _____
Signature

Title:_____
Title

Date:_____

*Must be the same signature on Bid Proposal

VENDORS ON SCRUTINIZED COMPANIES LISTS

By executing this Certificate_____, the bid proposer, certifies that it is not: (1) listed on the Scrutinized Companies that Boycott Israel List, created pursuant to section 215.4725, Florida Statutes, (2) engaged in a boycott of Israel, (3) listed on the Scrutinized Companies with Activities in Sudan List or the Scrutinized Companies with Activities in the Iran Petroleum Energy Sector List, created pursuant to section 215.473, Florida Statutes, or (4) engaged in business operations in Cuba or Syria. Pursuant to section 287.135(5), Florida Statutes, the County may disqualify the bid proper immediately or immediately terminate any agreement entered into for cause if the bid proposer is found to have submitted a false certification as to the above or if the Contractor is placed on the Scrutinized Companies that Boycott Israel List, is engaged in a boycott of Israel, has been placed on the Scrutinized Companies with Activities in Sudan List or the Scrutinized Companies with Activities in the Iran Petroleum Energy Sector List, or has been engaged in business operations in Cuba or Syria, during the term of the Agreement. If the County determines that the bid proposer has submitted a false certification, the County will provide written notice to the bid proposer. Unless the bid proposer demonstrates in writing, within 90 calendar days of receipt of the notice, that the County's determination of false certification was made in error, the County shall bring a civil action against the bid proposer. If the County's determination is upheld, a civil penalty shall apply, and the bid proposer will be ineligible to bid on any Agreement with a Florida agency or local governmental entity for three years after the date of County's determination of false certification by bid proposer.

As the person authorized to sign this statement, I certify that this firm complies fully with the above requirements.

DATE: _____

COMPANY: _____

ADDRESS: _____

_____

_____

PHONE NO.: _____

SIGNATURE: _____

NAME: _____
(Typed or Printed)

TITLE: _____

E-MAIL: _____

INDEMNIFICATION AND HOLD HARMLESS

Respondent shall indemnify and hold harmless the County, its officers and employees from liabilities, damages, losses, and costs including but not limited to attorney fees, to the extent caused by the negligence, recklessness, or intentional wrongful conduct of the Respondent and other persons employed or utilized by the Respondent in the performance of this Agreement.

_____	_____
Respondent's Company Name	Authorized Signature – Manual
_____	_____
Physical Address	Authorized Signature – Typed
_____	_____
Mailing Address	Title
_____	_____
Phone Number	FAX Number
_____	_____
Cellular Number	After-Hours Number(s)
_____	_____
Date	Email Address

CONFLICT OF INTEREST DISCLOSURE FORM

For purposes of determining any possible conflict of interest, all respondents, must disclose if any Okaloosa Board of County Commissioner, employee(s), elected officials(s), or if any of its agencies is also an owner, corporate officer, agency, employee, etc., of their business.

Indicate either "yes" (a county employee, elected official, or agency is also associated with your business), or "no". If yes, give person(s) name(s) and position(s) with your business.

YES_____ NO_____

NAME(S) **POSITION(S)**

_____

_____

_____

_____

FIRM NAME: _____

BY (PRINTED): _____

BY (SIGNATURE): _____

TITLE: _____

ADDRESS: _____

_____

PHONE NO. _____

E-MAIL _____

DATE _____

SYSTEM FOR AWARD MANAGEMENT (OCT 2016)

(a) Definitions. As used in this provision.

"Electronic Funds Transfer (EFT) indicator" means a four-character suffix to the unique entity identifier. The suffix is assigned at the discretion of the commercial, nonprofit, or Government entity to establish additional System for Award Management records for identifying alternative EFT accounts (see subpart 32.11) for the same entity.

"Registered in the System for Award Management (SAM) database" means that.

(1) The Offeror has entered all mandatory information, including the unique entity identifier and the EFT indicator, if applicable, the Commercial and Government Entity (CAGE) code, as well as data required by the Federal Funding Accountability and Transparency Act of 2006 (see subpart 4.14) into the SAM database;

(2) The offeror has completed the Core, Assertions, and Representations and Certifications, and Points of Contact sections of the registration in the SAM database;

(3) The Government has validated all mandatory data fields, to include validation of the Taxpayer Identification Number (TIN) with the Internal Revenue Service (IRS). The offeror will be required to provide consent for TIN validation to the Government as a part of the SAM registration process; and

(4) The Government has marked the record "Active".

"Unique entity identifier" means a number or other identifier used to identify a specific commercial, nonprofit, or Government entity. See www.sam.gov for the designated entity for establishing unique entity identifiers.

(b)(1) By submission of an offer, the offeror acknowledges the requirement that a prospective awardee shall be registered in the SAM database prior to award, during performance, and through final payment of any contract, basic agreement, basic ordering agreement, or blanket purchasing agreement resulting from this solicitation.

(2) The Offeror shall enter, in the block with its name and address on the cover page of its offer, the annotation "Unique Entity Identifier" followed by the unique entity identifier that identifies the Offeror's name and address exactly as stated in the offer. The Offeror also shall enter its EFT indicator, if applicable. The unique entity identifier will be used by the Contracting Officer to verify that the Offeror is registered in the SAM database.

(c) If the Offeror does not have a unique entity identifier, it should contact the entity designated at www.sam.gov for establishment of the unique entity identifier directly to obtain one. The Offeror should be prepared to provide the following information:

(1) Company legal business name.

(2) Tradestyle, doing business, or other name by which your entity is commonly recognized.

(3) Company Physical Street Address, City, State, and Zip Code.

(4) Company Mailing Address, City, State and Zip Code (if separate from physical).

(5) Company telephone number.

(6) Date the company was started.

(7) Number of employees at your location.

(8) Chief executive officer/key manager.

(9) Line of business (industry).

(10) Company Headquarters name and address (reporting relationship within your entity).

(d) If the Offeror does not become registered in the SAM database in the time prescribed by the Contracting Officer, the Contracting Officer will proceed to award to the next otherwise successful registered Offeror.

(e) Processing time, which normally takes 48 hours, should be taken into consideration when registering. Offerors who are not registered should consider applying for registration immediately upon receipt of this solicitation.

(f) Offerors may obtain information on registration at https://www.acquisition.gov .

Offerors SAM information:

Entity Name: _____

Entity Address: _____

Duns Number: _____

CAGE Code: _____

ANTI-COLLUSION STATEMENT: The below signed bidder has not divulged to, discussed or compared his bid with other bidders and has not **colluded with any other bidder or parties to bid whatever. Note: No premiums, rebates, or gratuities permitted either with, prior to, or after any** delivery of materials. Any such violation will result in the cancellation and/or return of material (as applicable) and the removal from bid list(s).

Bidder's Company Name	Authorized Signature – Manual
Address	Authorized Signature – Typed
Address	Title
Phone #	Fax #
Federal ID # or SS #	

Date Submitted: _____

CERTIFICATION OF OFFERER/BIDDER REGARDING TAX DELINQUENCY AND FELONY CONVICTIONS

The applicant must complete the following two certification statements. The applicant must indicate its current status as it relates to tax delinquency and felony conviction by inserting a checkmark (✓) in the space following the applicable response. The applicant agrees that, if awarded a contract resulting from this solicitation, it will incorporate this provision for certification in all lower tier subcontracts.

Certifications

1) The applicant represents that it is ( ) is not ( ) a corporation that has any unpaid Federal tax liability that has been assessed, for which all judicial and administrative remedies have been exhausted or have lapsed, and that is not being paid in a timely manner pursuant to an agreement with the authority responsible for collecting the tax liability.

2) The applicant represents that it is ( ) is not ( ) is not a corporation that was convicted of a criminal violation under any Federal law within the preceding 24 months.

Note

If an applicant responds in the affirmative to either of the above representations, the applicant is ineligible to receive an award unless the sponsor has received notification from the agency suspension and debarment official (SDO) that the SDO has considered suspension or debarment and determined that further action is not required to protect the Government's interests. The applicant therefore must provide information to the owner about its tax liability or conviction to the Owner, who will then notify the FAA Airports District Office, which will then notify the agency's SDO to facilitate completion of the required considerations before award decisions are made.

Term Definitions

Felony conviction: Felony conviction means a conviction within the preceding twenty-four (24) months of a felony criminal violation under any Federal law and includes conviction of an offense defined in a section of the U.S. code that specifically classifies the offense as a felony and conviction of an offense that is classified as a felony under 18 U.S.C. § 3559.

Tax Delinquency: A tax delinquency is any unpaid Federal tax liability that has been assessed, for which all judicial and administrative remedies have been exhausted, or have lapsed, and that is not being paid in a timely manner pursuant to an agreement with the authority responsible for collecting the tax liability.

DATE: _____ SIGNATURE: _____

COMPANY: _____ NAME: _____
(Typed or Printed)

TITLE: _____

Government Debarment & Suspension

Instructions

1. By signing and submitting this form, the prospective lower tier participant is providing the certification set out in accordance with these instructions.
2. The certification in this clause is a material representation of fact upon which reliance was placed when this transaction was entered into. If it is later determined that the prospective lower tier participant knowingly rendered an erroneous certification, in addition to other remedies available to the Federal Government, the department or agency with which this transaction originated may pursue available remedies, including suspension or debarment.
3. The prospective lower tier participant shall provide immediate written notice to the person(s) to which this proposal is submitted if at any time the prospective lower tier participant learns that its certification was erroneous when submitted or has become erroneous by reason of changed circumstances.
4. The terms "covered transaction," "debarred," "suspended," "ineligible," "lower tier covered transaction," "participant," "person," "primary covered transaction," "principal," "proposal," and "voluntarily excluded," as used in this clause, have the meanings set out in the Definitions and Coverage sections of the rules implementing Executive Orders 12549, at Subpart C of OMB 2 C.F.R. Part 180 and 3000.332. You may contact the department or agency to which this proposal is being submitted for assistance in obtaining a copy of those regulations.
5. The prospective lower tier participant agrees by submitting this form that, should the proposed covered transaction be entered into, it shall not knowingly enter into any lower tier covered transaction with a person who is debarred, suspended, declared ineligible, or voluntarily excluded from participation in this covered transaction, unless authorized by the department or agency with which this transaction originated.
6. The prospective lower tier participant further agrees by submitting this form that it will include this clause titled "Certification Regarding Debarment, Suspension, Ineligibility and Voluntary Exclusion - Lower Tier Covered Transactions," without modification, in all lower tier covered transactions and in all solicitations for lower tier covered transactions.
7. A participant in a covered transaction may rely upon a certification of a prospective participant in a lower tier covered transaction that is not debarred, suspended, ineligible, or voluntarily excluded from the covered transaction, unless it knows that the certification is erroneous. A participant may decide the method and frequency by which it determines the eligibility of its principals. Each participant may, but is not required to, check the System for Award Management (SAM) database.
8. Nothing contained in the foregoing shall be construed to require establishment of a system of records in order to render in good faith the certification required by this clause. The knowledge and information of a participant is not required to exceed that which is normally possessed by a prudent person in the ordinary course of business dealings.

9. Except for transactions authorized under paragraph (5) of these instructions, if a participant in a covered transaction knowingly enters into a lower tier covered transaction with a person who is suspended, debarred, ineligible, or voluntarily excluded from participation in this transaction, in addition to other remedies available to the Federal Government, the department or agency with which this transaction originated may pursue available remedies, including suspension and/or debarment.

Certification Regarding Debarment, Suspension, Ineligibility and Voluntary Exclusion Lower Tier Covered Transactions

The following statement is made in accordance with the Privacy Act of 1974 (5 U.S.C. § 552(a), as amended). This certification is required by the regulations implementing Executive Orders 12549, Debarment and Suspension, and OMB 2 C.F.R. Part 180, Participants' responsibilities. The regulations were amended and published on August 31, 2005, in 70 Fed. Reg. 51865-51880.

[READ INSTRUCTIONS ON PREVIOUS PAGE BEFORE COMPLETING CERTIFICATION]

1. The prospective lower tier participant certifies, by submission of this proposal, that neither it nor its principals is presently debarred, suspended, proposed for debarment, declared ineligible, or voluntarily excluded from participation in this transaction by any Federal or State department or agency;
2. Where the prospective lower tier participant is unable to certify to any of the statements in this certification, such prospective participant shall attach an explanation to this proposal

_____

_____
Printed Name and Title of Authorized Representative

_____ _____
Signature Date

Draft Contract

Please note: this contract is a draft for bidder to view and understand the County's standard terms and conditions, it is subject to revisions. By submitting a bid/proposal bidder/respondent understands and acknowledges that the draft contract is not an offer. Bidders/respondents are not to sign this draft contract.

EXHIBIT "A"

To be inserted later once submittals have been made- Initiation to Bid and Respondents Acknowledgement solicited for **CONSTRUCT WEST APRON EXPANSION AND INFRASTRUCTURE AT THE DESTIN – FORT WALTON BEACH AIRPORT (VPS)** date of opening **July 10th, 2019 at 3:00 P.M.** and any addendums thereto.

STANDARD FORM OF AGREEMENT

THIS AGREEMENT is dated as of the _____ day of _____ in the year 20__ by and between The Board of County Commissioners of Okaloosa County, Florida (hereinafter called Owner) and _____(hereinafter called Contractor).

Owner and Contractor, in consideration of the mutual covenants hereinafter set forth, agree as follows:

Article 1. WORK.

Contractor shall complete all Work as specified or indicated in the Contract Documents. The Work is generally described as follows:

CONSTRUCT WEST APRON EXPANSION AND INFRASTRUCTURE AT VPS

Article 2. ENGINEER.

The Project has been designed by

INFRASTRUCTURE CONSULTING AND ENGINEERING

who is hereinafter called Engineer and who is to act as Owner's representative, assume all duties and responsibilities and have the rights and authority assigned to Engineer in the Contract Documents in connection with completion of the Work in accordance with the Contract Documents.

Article 3. CONTRACT TIMES.

3.1 The Work will be substantially completed within **350** calendar days after the date when the Contract Times commence to run, and completed and ready for final payment within **380** calendar days after the date when the Contract Times commence to run.

3.2 *Liquidated Damages.* Owner and Contractor recognize that time is of the essence of this Agreement and that Owner will suffer financial loss if the Work is not completed within the times specified in paragraph 3.1 above, plus any extensions thereof allowed by the Owner. They also recognize the delays, expense and difficulties involved in proving the actual loss suffered by Owner if the Work is not completed on time. Accordingly, instead of requiring of such proof, Owner and Contractor agree that as liquidated damages for delay (but not as a penalty) Contractor shall pay Owner the amount specified in Paragraph 3.3 for each day that expires after the time specified in paragraph 3.1 for Substantial Completion until the Work is substantially complete. After Substantial Completion, if Contractor shall neglect, refuse, or fail to complete the remaining Work within the time specified in paragraph 3.1 for completion and readiness for final payment or any proper extension thereof granted by Owner, Contractor shall pay Owner the amount

specified in Paragraph 3.3 for each day that expires after the time specified in paragraph 3.1 for completion and readiness for final payment. The Contractor hereby expressly waives and relinquishes any right which it may have to seek to characterize the liquidated damages as a penalty, which the parties agree represents a fair and reasonable estimate of the Owner's actual damages at the time of contracting if the Contractor fails to substantially complete the Work in a timely manner.

3.3.1 Liquidated Damages are based upon the original contract amount, as established by Okaloosa County. Liquidated damages, based upon the original contract amount of $_____, will be _____dollars ($_____) per calendar day.

Article 4. CONTRACT PRICE.

Owner shall pay Contractor for completion of the Work in accordance with the Contract Documents an amount in current funds equal to the sum of the established unit price for each separately identified item of Unit Price Work times the estimated quantity of that item as indicated in the Bid Schedule submitted in the Bid Form. The cost of this project is $_____ as per the attached Contractor bid.

Estimated quantities are not guaranteed, and determinations of actual quantities and classification are to be made by Engineer.

Article 5. PAYMENT PROCEDURES

Contractor shall submit Application for Payment in accordance with Contract. Applications for Payment will be processed by Engineer as provided in the contract.

5.1 *Progress Payments; Retainage*. Owner shall make progress payments on account of the Contract Price on the basis of Contractor's Applications for Payment as recommended by Engineer, on or about the fifteenth (15th) day of each month during construction as provided in paragraphs 5.1.1 and 5.1.2 below. All such payments will be measured based on the number of units completed. Payments to the Contractor shall in no way imply approval or acceptance of Contractor's work

5.1.1 Prior to Substantial completion, payments will be made in an amount equal to the percentage indicated below, but, in each case, less the aggregate of payments previously made and less such amounts as Engineer shall determine, or Owner may withhold.

90 % of Work completed (with the balance being retainage). Once the Contractor completes at least 50% of the Work based on approved pay applications, the retainage will be reduced from 10% to 5% for the remainder of the project. Therefore, following completion of at least 50% of the Work, the Contractor may be paid 95 % of Work completed (with the balance being retainage).

90 % (with the balance being retainage) of materials and equipment not incorporated in the Work (but delivered, suitably stored and accompanied by documentation satisfactory to Owner). Once the Contractor completes at least 50% of the Work based on approved pay applications, the retainage will be reduced from 10% to 5% for the remainder of the project. Therefore, following completion of at least 50% of the Work, the Contractor may be paid 95 % of materials and equipment not incorporated in the Work (but delivered, suitably stored and accompanied by documentation satisfactory to Owner).

5.1.2 Upon Substantial Completion, in an amount sufficient to increase total payments to Contractor to 95 % of the Contract Price (with the balance being retainage), less such amounts

as Engineer shall determine, or Owner may withhold..

5.1.3 Retainage requirements may be changed to reflect a proposed change to state regulatory statutes.

5.2 *Final Payment.* Upon final completion and acceptance of the Work, Owner shall pay the remainder of the Contract Price as recommended by Engineer.

5.2.1 Contractor's acceptance of final payment shall constitute a full waiver of any and all claims by Contractor against the County arising out of this Agreement or otherwise relating to the Project, except those previously made in writing and identified by Contractor as unsettled at the time of the final Application for Payment. Neither the acceptance of the Work nor payment by the County shall be deemed to be a waiver of the County's right to enforce any obligations of the Contractor hereunder or to the recovery of damages for defective Work not discovered by the Engineer or the County at the time of final inspection.

5.3 Payments Withheld

5.3.1 The Engineer or the County may decline to approve any Applications for Payment, or portions thereof, because of subsequently discovered evidence or subsequent inspections. The Engineer or the County may nullify the whole or any part of any inspections. The Engineer or the County may nullify the whole or any part of any approval for payment previously issued and the County may withhold any payments otherwise due Contractor under this Agreement or any other agreement between the County and the Contractor, to such extent as may be necessary in the County's opinion to protect it from loss because of:

5.3.1.1 Defective Work not remedied;

5.3.1.2 Third party claims filed or reasonable evidence indicating probable filing of such claims;

5.3.1.3 Failure of Contractor to make payment properly to subcontractors or for labor, materials or equipment;

5.3.1.4 Reasonable doubt that the Work can be completed for the unpaid balance of the Contract Amount;

5.3.1.5 Reasonable indication that the Work will not be completed within the Contract Time;

5.3.1.6 Unsatisfactory prosecution of the Work by the Contractor;

5.3.1.7 Failure to provide accurate and current "As-Builts"; or

5.3.1.8 Any other material breach of the Contract Documents.

5.3.2 If these conditions in Subsection 5.3.1 are not remedied or removed, the County may after three (3) days written notice, rectify the same at Contractor's expense. The County also may offset against any sums due Contractor the amount of any liquidated or unliquidated obligations of Contractor to the County, whether relating to or arising out of his Agreement or any other agreement between Contractor and the County.

Article 6. CONTRACTOR'S REPRESENTATIONS.

In order to induce Owner to enter into this Agreement Contractor makes the following representations:

6.1 Contractor has examined and carefully studied the Contract Documents (including the Addenda listed in Article 7) and the other related data identified in the Project Documents including "technical data."

6.2 Contractor has visited the site and become familiar with and is satisfied as to the general, local, and site conditions that may affect cost, progress, performance or furnishing of the Work.

6.3 Contractor is familiar with and is satisfied as to all federal, state, and local Laws and Regulations that may affect cost, progress, performance and furnishing of the Work.

6.4 Contractor has carefully studied all reports of explorations and tests of subsurface conditions at or contiguous to site and all drawings of physical conditions in or relating to existing surface or subsurface structures at or contiguous to the site (except Underground Facilities) which have been identified in the Bid documents. Contractor acknowledges that such reports and drawings are not Contract Documents and may not be complete for Contractor's purposes. Contractor acknowledges that Owner and Engineer do not assume responsibility for the accuracy or completeness of information and data shown or indicated in the Contract Documents with respect to Underground Facilities at or contiguous to the site. Contractor has obtained and carefully studied (or assumes responsibility for having done so) all such additional supplementary examinations, investigations, explorations, tests, studies, and data concerning conditions (surface, subsurface, and Underground Facilities) at or contiguous to the site or otherwise which may affect cost, progress, performance, or furnishing of the Work or which relate to any aspect of the means, methods, techniques, sequences, and procedures of construction to be employed by Contractor and safety precautions, and programs incident thereto. Contractor does not consider that any additional examinations, investigations, explorations, tests, studies, or data are necessary for the performance and furnishing of the Work at the Contract Price, within the Contract Times and in accordance with the other terms and conditions of the Contract Documents.

6.5 Contractor is aware of the general nature of work to be performed by Owner and others at the site that relates to the Work as indicated in the Contract Documents.

6.6. Contractor has correlated the information known to Contractor, information and observation obtained from visits to the site, reports, and drawings identified in the Contract Documents and all additional examinations, investigations, explorations, tests, studies, and data with the Contract Documents.

6.7. Contractor has given Engineer written notice of all conflicts, errors, ambiguities or discrepancies that Contractor has discovered in the Contract Documents and the written resolution thereof by Engineer is acceptable to Contractor, and the Contract Documents are generally sufficient to indicate and convey understanding of all terms and conditions for performance and furnishing of the Work.

Article 7. CONTRACT DOCUMENTS

The Contract Documents that comprise the entire agreement between Owner and Contractor concerning the Work consist of the following:

7.1 This Agreement

7.2 Exhibit A- Contractor's Bid

7.3 Exhibit B- Standard Contract Clauses

7.4 Any other documents necessary to clarify and memorialize the agreement between Contractor and Owner.

Article 8. PUBLIC RECORDS

Any record created by either party in accordance with this Contract shall be retained and maintained in accordance with the public records law, Florida Statutes, Chapter 119.

IF THE CONSULTANT HAS QUESTIONS REGARDING THE APPLICATION OF CHAPTER 119, FLORIDA STATUTES, TO THE CONTRACTOR'S DUTY TO PROVIDE PUBLIC RECORDS RELATING TO THIS CONTRACT, CONTACT THE CUSTODIAN OF PUBLIC RECORDS AT OKALOOSA COUNTY RISK MANAGEMENT DEPARTMENT 5479 OLD BETHEL ROAD CRESTVIEW, FL 32536 PHONE: (850) 689-5977 riskinfo@myokaloosa.com.

Consultant must comply with the public records laws, Florida Statute chapter 119, specifically Consultant must:

8.1 Keep and maintain public records required by the County to perform the service.

8.2 Upon request from the County's custodian of public records, provide the County with a copy of the requested records or allow the records to be inspected or copied within a reasonable time at a cost that does not exceed the cost provided in chapter 119 Florida Statutes or as otherwise provided by law.

8.3 Ensure that public records that are exempt or confidential and exempt from public records disclosure requirements are not disclosed except as authorized by law for the duration of the contract term and following completion of the contract if the consultant does not transfer the records to the County.

8.4 Upon completion of the contract, transfer, at no cost, to the County all public records in possession of the contractor or keep and maintain public records required by the County to perform the service. If the consultant transfers all public records to the public agency upon completion of the contract, the consultant shall destroy any duplicate public records that are exempt or confidential and exempt from public records disclosure requirements. If the consultant keeps and maintains public records upon completion of the contract, the consultant shall meet all applicable requirements for retaining the public records. All records stored electronically must be provided to the public agency, upon the request from the public agency's custodian of public records, in a format that is compatible with the information technology systems of the public agency.

Article 9. AUDIT

The County and/or its designee shall have the right from time to time at its sole expense to audit the compliance by the Contractor with the terms, conditions, obligations, limitations, restrictions, and requirements of this Contract and such right shall extend for a period of three (3) years after termination of this Contract.

Article 10. TERMINATION FOR CONVENIENCE

Owner may at any time and for any reason terminate Contractor's services and work at Owner's convenience. Upon receipt of such notice, Contractor shall, unless the notice directs otherwise, immediately discontinue the work and placing of orders for materials, facilities and supplies in connection with the performance of this Agreement.

Upon such termination, Contractor shall be entitled to payment only as follows: (1) the actual cost of the work completed in conformity with this Agreement; plus, (2) such other costs actually incurred by Contractor as are permitted by the prime contract and approved by Owner; (3) plus ten percent (10%) of

the cost of the work referred to in subparagraph (1) above for overhead and profit. There shall be deducted from such sums as provided in this subparagraph the amount of any payments made to Contractor prior to the date of the termination of this Agreement. Contractor shall not be entitled to any claim or claim of lien against Owner for any additional compensation or damages in the event of such termination and payment. Further, Owner may terminate this contract immediately for failure of contractor to comply with Chapter 119, Florida Statutes.

Article 11. VIOLATIONS OF CHAPTER 119 FLORIDA STATUTES

The County reserves the right to terminate this agreement immediately for failure of Contractor to adhere to the requirements of Florida Statutes Chapter 119.

Article 12. MISCELLANEOUS.

12.1 Terms used in this Agreement which are defined in the Bid documents.

12.2 No assignment by a party hereto of any rights under or interests in the Contract Documents will be binding on another party hereto without the written consent of the party sought to be bound; and, specifically but without limitation, moneys that may become due and moneys that are due may not be assigned without such consent (except to the extent that the effect of this restriction may be limited by law), and unless specifically stated to the contrary in any written consent to an assignment no assignment will release or discharge the assignor from any duty or responsibility under the Contract Documents.

12.3 Owner and Contractor each binds itself, its partners, successors, assigns and legal representatives to the other party hereto, its partners, successors, assigns and legal representatives in respect to all covenants, agreements, and obligations contained in the Contract Documents.

12.4 Any provisions or part of the Contract Documents held to be void or unenforceable under any Law or Regulation shall be deemed stricken, and all remaining provisions shall continue to be valid and binding upon Owner and Contractor, who agree that the Contract Documents shall be reformed to replace such stricken provision or part thereof with a valid and enforceable provision that comes as close as possible to expressing the intention of the stricken provision

Article 13. OTHER PROVISIONS

IN WITNESS WHEREOF, Owner, and Contractor have signed this Agreement in triplicate. One counterpart each has been delivered to Owner, Contractor, and Engineer. All portions of the Contract Documents have been signed, initialed or identified by Owner, and Contractor, or identified by Engineer on their behalf.

This Agreement will be effective on _____, 20___ (which is the Effective Date of the Agreement).

OWNER	**CONTRACTOR**
Okaloosa County, Florida ,	_____
By: _____,	By: _____
Charles K Windes, Jr. Chairman, Board of County Commissioners	
	Signed: _____
Signed: _____	
[CORPORATE SEAL}	[CORPORATE SEAL]
Attest _____	Attest _____
Signed: _____	Signed: _____
Address for giving notices	Address for giving notices
_____	_____
_____	_____
(If Owner is a public body, attached evidence of authority to sign and resolution or other documents authorizing execution of Agreement).	License No. _____ Agent for services of process: _____ _____ If Contractor is a corporation, attach evidence of authority to sign).

Standard Contract Clauses

Exhibit "B"

Title VI Clauses for Compliance with Nondiscrimination Requirements

Compliance with Nondiscrimination Requirements

During the performance of this contract, the contractor, for itself, its assignees, and successors in interest (hereinafter referred to as the "contractor") agrees as follows:

1. **Compliance with Regulations:** The contractor (hereinafter includes consultants) will comply with the Title VI List of Pertinent Nondiscrimination Acts And Authorities, as they may be amended from time to time, which are herein incorporated by reference and made a part of this contract.

2. **Non-discrimination:** The contractor, with regard to the work performed by it during the contract, will not discriminate on the grounds of race, color, or national origin in the selection and retention of subcontractors, including procurements of materials and leases of equipment. The contractor will not participate directly or indirectly in the discrimination prohibited by the Nondiscrimination Acts and Authorities, including employment practices when the contract covers any activity, project, or program set forth in Appendix B of 49 CFR part 21.

3. **Solicitations for Subcontracts, Including Procurements of Materials and Equipment:** In all solicitations, either by competitive bidding, or negotiation made by the contractor for work to be performed under a subcontract, including procurements of materials, or leases of equipment, each potential subcontractor or supplier will be notified by the contractor of the contractor's obligations under this contract and the Nondiscrimination Acts And Authorities on the grounds of race, color, or national origin.

4. **Information and Reports:** The contractor will provide all information and reports required by the Acts, the Regulations, and directives issued pursuant thereto and will permit access to its books, records, accounts, other sources of information, and its facilities as may be determined by the sponsor or the Federal Aviation Administration to be pertinent to ascertain compliance with such Nondiscrimination Acts And Authorities and instructions. Where any information required of a contractor is in the exclusive possession of another who fails or refuses to furnish the information, the contractor will so certify to the sponsor or the Federal Aviation Administration, as appropriate, and will set forth what efforts it has made to obtain the information.

5. **Sanctions for Noncompliance:** In the event of a contractor's noncompliance with the Non-discrimination provisions of this contract, the sponsor will impose such contract

sanctions as it or the Federal Aviation Administration may determine to be appropriate, including, but not limited to:

a. Withholding payments to the contractor under the contract until the contractor complies; and/or

b. Cancelling, terminating, or suspending a contract, in whole or in part.

6. **Incorporation of Provisions:** The contractor will include the provisions of paragraphs one through six in every subcontract, including procurements of materials and leases of equipment, unless exempt by the Acts, the Regulations and directives issued pursuant thereto. The contractor will take action with respect to any subcontract or procurement as the sponsor or the Federal Aviation Administration may direct as a means of enforcing such provisions including sanctions for noncompliance. Provided, that if the contractor becomes involved in, or is threatened with litigation by a subcontractor, or supplier because of such direction, the contractor may request the sponsor to enter into any litigation to protect the interests of the sponsor. In addition, the contractor may request the United States to enter into the litigation to protect the interests of the United States.

Title VI List of Pertinent Nondiscrimination Acts and Authorities

Title VI List of Pertinent Nondiscrimination Acts and Authorities

During the performance of this contract, the contractor, for itself, its assignees, and successors in interest (hereinafter referred to as the "contractor") agrees to comply with the following non-discrimination statutes and authorities; including but not limited to:

- Title VI of the Civil Rights Act of 1964 (42 U.S.C. § 2000d *et seq*., 78 stat. 252), (prohibits discrimination on the basis of race, color, national origin);
- 49 CFR part 21 (Non-discrimination In Federally-Assisted Programs of The Department of Transportation—Effectuation of Title VI of The Civil Rights Act of 1964);
- The Uniform Relocation Assistance and Real Property Acquisition Policies Act of 1970, (42 U.S.C. § 4601), (prohibits unfair treatment of persons displaced or whose property has been acquired because of Federal or Federal-aid programs and projects);
- Section 504 of the Rehabilitation Act of 1973, (29 U.S.C. § 794 *et seq*.), as amended, (prohibits discrimination on the basis of disability); and 49 CFR part 27;
- The Age Discrimination Act of 1975, as amended, (42 U.S.C. § 6101 *et seq*.), (prohibits discrimination on the basis of age);

- Airport and Airway Improvement Act of 1982, (49 USC § 471, Section 47123), as amended, (prohibits discrimination based on race, creed, color, national origin, or sex);
- The Civil Rights Restoration Act of 1987, (PL 100-209), (Broadened the scope, coverage and applicability of Title VI of the Civil Rights Act of 1964, The Age Discrimination Act of 1975 and Section 504 of the Rehabilitation Act of 1973, by expanding the definition of the terms "programs or activities" to include all of the programs or activities of the Federal-aid recipients, sub-recipients and contractors, whether such programs or activities are Federally funded or not);
- Titles II and III of the Americans with Disabilities Act of 1990, which prohibit discrimination on the basis of disability in the operation of public entities, public and private transportation systems, places of public accommodation, and certain testing entities (42 U.S.C. §§ 12131 – 12189) as implemented by Department of Transportation regulations at 49 CFR parts 37 and 38;
- The Federal Aviation Administration's Non-discrimination statute (49 U.S.C. § 47123) (prohibits discrimination on the basis of race, color, national origin, and sex);
- Executive Order 12898, Federal Actions to Address Environmental Justice in Minority Populations and Low-Income Populations, which ensures non-discrimination against minority populations by discouraging programs, policies, and activities with disproportionately high and adverse human health or environmental effects on minority and low-income populations;
- Executive Order 13166, Improving Access to Services for Persons with Limited English Proficiency, and resulting agency guidance, national origin discrimination includes discrimination because of limited English proficiency (LEP). To ensure compliance with Title VI, you must take reasonable steps to ensure that LEP persons have meaningful access to your programs (70 Fed. Reg. at 74087 to 74100);
- Title IX of the Education Amendments of 1972, as amended, which prohibits you from discriminating because of sex in education programs or activities (20 U.S.C. 1681 et seq).

FEDERAL FAIR LABOR STANDARDS ACT (FEDERAL MINIMUM WAGE)

All contracts and subcontracts that result from this solicitation incorporate by reference the provisions of 29 CFR part 201, the Federal Fair Labor Standards Act (FLSA), with the same force and effect as if given in full text. The FLSA sets minimum wage, overtime pay, recordkeeping, and child labor standards for full and part time workers.

The [*contractor* | *consultant*] has full responsibility to monitor compliance to the referenced statute or regulation. The [*contractor* | *consultant*] must address any claims or disputes that arise from this requirement directly with the U.S. Department of Labor – Wage and Hour Division

OCCUPATIONAL SAFETY AND HEALTH ACT OF 1970

All contracts and subcontracts that result from this solicitation incorporate by reference the requirements of 29 CFR Part 1910 with the same force and effect as if given in full text. Contractor must provide a work environment that is free from recognized hazards that may cause death or serious physical harm to the employee. The Contractor retains full responsibility to monitor its compliance and their subcontractor's compliance with the applicable requirements of the Occupational Safety and Health Act of 1970 (20 CFR Part 1910). Contractor must address any claims or disputes that pertain to a referenced requirement directly with the U.S. Department of Labor – Occupational Safety and Health Administration.

E-VERIFY

Enrollment and verification requirements.

(1) If the Contractor is not enrolled as a Federal Contractor in E-Verify at time of contract award, the Contractor shall-

a. Enroll. Enroll as a Federal Contractor in the E-Verify Program within thirty (30) calendar days of contract award;

b. Verify all new employees. Within ninety (90) calendar days of enrollment in the E-Verify program, begin to use E-Verify to initiate verification of employment eligibility of all new hires of the Contractor, who are working in the United States, whether or not assigned to the contract, within three (3) business days after the date of hire (but see paragraph (b)(3) of this section); and,

c. Verify employees assigned to the contract. For each employee assigned to the contract, initiate verification within ninety (90) calendar days after date of enrollment or within thirty (30) calendar days of the employee's assignment to the contract, whichever date is later (but see paragraph (b)(4) of this section.)

(2) If the Contractor is enrolled as a Federal Contractor in E-Verify at time of contract award, the Contractor shall use E-Verify to initiate verification of employment eligibility of

a. All new employees.

a. Enrolled ninety (90) calendar days or more. The Contractor shall initiate verification of all new hires of the Contractor, who are working in the United States, whether or not assigned to the contract, within three (3) business days after the date of hire (but see paragraph (b)(3) of this section); or

b. Enrolled less than ninety (90) calendar days. Within ninety (90) calendar days after enrollment as a Federal Contractor in E-Verify, the Contractor shall initiate verification of all new hires of the contractor, who are working in the United States, whether or not assigned to the contract, within three (3) business days after the date of hire (but see paragraph (b)(3) of this section; or

c. Employees assigned to the contract. For each employee assigned to the contract, the Contractor shall initiate verification within ninety (90) calendar days after date of contract award or within thirty (30) days after assignment to the contract, whichever date is later (but see paragraph (b)(4) of this section.)

(3) If the Contractor is an institution of higher education (as defined at 20 U.S.C. 1001(a)); a State of local government or the government of a Federally recognized Indian tribe, or a surety performing under a takeover agreement entered into with a Federal agency pursuant to a performance bond, the Contractor may choose to verify only employees assigned to the contract, whether existing employees or new hires. The Contractor shall follow the applicable verification requirements of (b)(1) or (b)(2), respectively, except that any requirement for verification of new employees applies only to new employees assigned to the contract.

(4) Option to verify employment eligibility of all employees. The Contractor may elect to verify all existing employees hired after November 6, 2986 (after November 27, 2009, in the Commonwealth of the Northern Mariana Islands), rather than just those employees assigned to the contract. The Contractor shall initiate verification for each existing employee working in the United States who was hired after November 6, 1986 (after November 27, 2009, in the Commonwealth of the Northern Mariana Islands), within one hundred eighty (180) calendar days of-

a. Enrollment in the E-Verify program; or

b. Notification to E-Verify Operations of the Contractor's decision to exercise this option, using the contract information provided in the E-Verify program Memorandum of Understanding (MOU)

(5) The Contractor shall comply, for the period of performance of this contract, with the requirements of the E-Verify program MOU.

a. The Department of Homeland Security (DHS) or the Social Security Administration (SSA) may terminate the Contractor's MOU and deny access to the E-Verify system in accordance with the terms of the MOU. In such case, the Contractor, will be referred to a suspension or debarment official.

b. During the period between termination of the MOU and a decision by the suspension or debarment official whether to suspend or debar, the contractor is excused from its obligations under paragraph (b) of this clause. If the suspension or debarment official determines not to suspend or debar the Contractor, then the Contractor must reenroll in E-Verify.

c. Web site. Information on registration for and use of the E-Verify program can be obtained via the Internet at the Department of Homeland Security Web site: http://www.dhs.gov/E-Verify.

d. Individuals previously verified. The Contractor is not required by this clause to perform additional employment verification using E-Verify for any employee

i. Whose employment eligibility was previously verified by the Contractor through the E-Verify program;

ii. Who has been granted and holds an active U.S. Government security clearance for access to confidential, secret, or top secret information in accordance with the National Industrial Security Program Operating Manual; or

iii. Who has undergone a completed background investigation and been issued credentials pursuant to Homeland Security Presidential Directive (HSPD)-12. Policy for a Common Identification Standard for Federal Employees and Contractors.

Subcontracts. The Contractor shall include the requirements of this clause, including this paragraph € (appropriately modified for identification of the parties in each subcontract that-

(1) Is for-

i. Commercial and noncommercial services (except for commercial services that are part of the purchase of a COTS item (or an item that would be a COTS item, but for minor modifications), performed by the COTS provider, and are normally provided for that COTS item); or

ii. Construction;

(2) Has a value of more than $3,500; and

(3) Includes work performed in the United States.

Page Intentionally Left Blank

GENERAL PROVISIONS

BID DOCUMENTS

CONSTRUCT WEST APRON EXPANSION
AND INFRASTRUCTURE AT VPS

Section 10

Definition of Terms

When the following terms are used in these specifications, in the contract, or in any documents or other instruments pertaining to construction where these specifications govern, the intent and meaning shall be defined as follows:

Paragraph Number	Term	Definition
10-01	**AASHTO**	The American Association of State Highway and Transportation Officials.
10-02	**Access Road**	The right-of-way, the roadway and all improvements constructed thereon connecting the airport to a public roadway.
10-03	**Advertisement**	A public announcement, as required by local law, inviting bids for work to be performed and materials to be furnished.
10-04	**Airport**	Airport means an area of land or water which is used or intended to be used for the landing and takeoff of aircraft; an appurtenant area used or intended to be used for airport buildings or other airport facilities or rights of way; airport buildings and facilities located in any of these areas, and a heliport.
10-05	**Airport Improvement Program (AIP)**	A grant-in-aid program, administered by the Federal Aviation Administration (FAA).
10-06	**Air Operations Area (AOA)**	The term air operations area (AOA) shall mean any area of the airport used or intended to be used for the landing, takeoff, or surface maneuvering of aircraft. An air operation area shall include such paved or unpaved areas that are used or intended to be used for the unobstructed movement of aircraft in addition to its associated runway, taxiway, or apron.
10-07	**Apron**	Area where aircraft are parked, unloaded or loaded, fueled and/or serviced.
10-08	**ASTM International (ASTM)**	Formerly known as the American Society for Testing and Materials (ASTM).
10-09	**Award**	The Owner's notice to the successful bidder of the acceptance of the submitted bid.
10-10	**Bidder**	Any individual, partnership, firm, or corporation, acting directly or through a duly authorized representative, who submits a proposal for the work contemplated.
10-11	**Building Area**	An area on the airport to be used, considered, or intended to be used for airport buildings or other airport facilities or rights-of-way together with all airport buildings and facilities located thereon.

Paragraph Number	Term	Definition
10-12	**Calendar Day**	Every day shown on the calendar.
10-13	**Certificate of Analysis (COA)**	The COA is the manufacturer's Certificate of Compliance (COC) including all applicable test results required by the specifications.
10-14	**Certificate of Compliance (COC)**	The manufacturer's certification stating that materials or assemblies furnished fully comply with the requirements of the contract. The certificate shall be signed by the manufacturer's authorized representative.
10-15	**Change Order**	A written order to the Contractor covering changes in the plans, specifications, or proposal quantities and establishing the basis of payment and contract time adjustment, if any, for work within the scope of the contract and necessary to complete the project.
10-16	**Contract**	A written agreement between the Owner and the Contractor that establishes the obligations of the parties including but not limited to performance of work, furnishing of labor, equipment and materials and the basis of payment. The awarded contract includes but may not be limited to: Advertisement, Contract form, Proposal, Performance bond, payment bond, General provisions, certifications and representations, Technical Specifications, Plans, Supplemental Provisions, standards incorporated by reference and issued addenda.
10-17	**Contract Item (Pay Item)**	A specific unit of work for which a price is provided in the contract.
10-18	**Contract Time**	The number of calendar days or working days, stated in the proposal, allowed for completion of the contract, including authorized time extensions. If a calendar date of completion is stated in the proposal, in lieu of a number of calendar or working days, the contract shall be completed by that date.
10-19	**Contractor**	The individual, partnership, firm, or corporation primarily liable for the acceptable performance of the work contracted and for the payment of all legal debts pertaining to the work who acts directly or through lawful agents or employees to complete the contract work.
10-20	**Contractors Quality Control (QC) Facilities**	The Contractor's QC facilities in accordance with the Contractor Quality Control Program (CQCP).
10-21	**Contractor Quality Control Program (CQCP)**	Details the methods and procedures that will be taken to assure that all materials and completed construction required by the contract conform to contract plans, technical specifications and other requirements, whether manufactured by the Contractor, or procured from subcontractors or vendors.

Paragraph Number	Term	Definition
10-22	**Control Strip**	A demonstration by the Contractor that the materials, equipment, and construction processes results in a product meeting the requirements of the specification.
10-23	**Construction Safety and Phasing Plan (CSPP)**	The overall plan for safety and phasing of a construction project developed by the airport operator, or developed by the airport operator's consultant and approved by the airport operator. It is included in the invitation for bids and becomes part of the project specifications.
10-24	**Drainage System**	The system of pipes, ditches, and structures by which surface or subsurface waters are collected and conducted from the airport area.
10-25	**Engineer**	The individual, partnership, firm, or corporation duly authorized by the Owner to be responsible for engineering, inspection, and/or observation of the contract work and acting directly or through an authorized representative.
10-26	**Equipment**	All machinery, together with the necessary supplies for upkeep and maintenance; and all tools and apparatus necessary for the proper construction and acceptable completion of the work.
10-27	**Extra Work**	An item of work not provided for in the awarded contract as previously modified by change order or supplemental agreement, but which is found by the Owner's Engineer or Resident Project Representative (RPR) to be necessary to complete the work within the intended scope of the contract as previously modified.
10-28	**FAA**	The Federal Aviation Administration. When used to designate a person, FAA shall mean the Administrator or their duly authorized representative.
10-29	**Federal Specifications**	The federal specifications and standards, commercial item descriptions, and supplements, amendments, and indices prepared and issued by the General Services Administration.
10-30	**Force Account**	**a.** Contract Force Account - A method of payment that addresses extra work performed by the Contractor on a time and material basis. **b.** Owner Force Account - Work performed for the project by the Owner's employees.
10-31	**Intention of Terms**	Whenever, in these specifications or on the plans, the words "directed," "required," "permitted," "ordered," "designated," "prescribed," or words of like import are used, it shall be understood that the direction, requirement, permission, order, designation, or prescription of the Engineer and/or Resident Project Representative (RPR) is intended; and similarly, the words "approved," "acceptable," "satisfactory," or words of like import, shall mean approved by, or acceptable to, or satisfactory

Paragraph Number	Term	Definition
		to the Engineer and/or RPR, subject in each case to the final determination of the Owner. Any reference to a specific requirement of a numbered paragraph of the contract specifications or a cited standard shall be interpreted to include all general requirements of the entire section, specification item, or cited standard that may be pertinent to such specific reference.
10-32	**Lighting**	A system of fixtures providing or controlling the light sources used on or near the airport or within the airport buildings. The field lighting includes all luminous signals, markers, floodlights, and illuminating devices used on or near the airport or to aid in the operation of aircraft landing at, taking off from, or taxiing on the airport surface.
10-33	**Major and Minor Contract Items**	A major contract item shall be any item that is listed in the proposal, the total cost of which is equal to or greater than 20% of the total amount of the award contract. All other items shall be considered minor contract items.
10-34	**Materials**	Any substance specified for use in the construction of the contract work.
10-35	**Modification of Standards (MOS)**	Any deviation from standard specifications applicable to material and construction methods in accordance with FAA Order 5300.1.
10-36	**Notice to Proceed (NTP)**	A written notice to the Contractor to begin the actual contract work on a previously agreed to date. If applicable, the Notice to Proceed shall state the date on which the contract time begins.
10-37	**Owner**	The term "Owner" shall mean the party of the first part or the contracting agency signatory to the contract. Where the term "Owner" is capitalized in this document, it shall mean airport Sponsor only. The Owner for this project is **Okaloosa County, Florida Board of County Commissioners**.
10-38	**Passenger Facility Charge (PFC)**	Per 14 Code of Federal Regulations (CFR) Part 158 and 49 United States Code (USC) § 40117, a PFC is a charge imposed by a public agency on passengers enplaned at a commercial service airport it controls.
10-39	**Pavement Structure**	The combined surface course, base course(s), and subbase course(s), if any, considered as a single unit.
10-40	**Payment bond**	The approved form of security furnished by the Contractor and their own surety as a guaranty that the Contractor will pay in full all bills and accounts for materials and labor used in the construction of the work.

Paragraph Number	Term	Definition
10-41	**Performance bond**	The approved form of security furnished by the Contractor and their own surety as a guaranty that the Contractor will complete the work in accordance with the terms of the contract.
10-42	**Plans**	The official drawings or exact reproductions which show the location, character, dimensions and details of the airport and the work to be done and which are to be considered as a part of the contract, supplementary to the specifications. Plans may also be referred to as 'contract drawings.'
10-43	**Project**	The agreed scope of work for accomplishing specific airport development with respect to a particular airport.
10-44	**Proposal**	The written offer of the bidder (when submitted on the approved proposal form) to perform the contemplated work and furnish the necessary materials in accordance with the provisions of the plans and specifications.
10-45	**Proposal guaranty**	The security furnished with a proposal to guarantee that the bidder will enter into a contract if their own proposal is accepted by the Owner.
10-46	**Quality Assurance (QA)**	Owner's responsibility to assure that construction work completed complies with specifications for payment.
10-47	**Quality Control (QC)**	Contractor's responsibility to control material(s) and construction processes to complete construction in accordance with project specifications.
10-48	**Quality Assurance (QA) Inspector**	An authorized representative of the Engineer and/or Resident Project Representative (RPR) assigned to make all necessary inspections, observations, tests, and/or observation of tests of the work performed or being performed, or of the materials furnished or being furnished by the Contractor.
10-49	**Quality Assurance (QA) Laboratory**	The official quality assurance testing laboratories of the Owner or such other laboratories as may be designated by the Engineer or RPR. May also be referred to as Engineer's, Owner's, or QA Laboratory.
10-50	**Resident Project Representative (RPR)**	The individual, partnership, firm, or corporation duly authorized by the Owner to be responsible for all necessary inspections, observations, tests, and/or observations of tests of the contract work performed or being performed, or of the materials furnished or being furnished by the Contractor, and acting directly or through an authorized representative.
10-51	**Runway**	The area on the airport prepared for the landing and takeoff of aircraft.

Paragraph Number	Term	Definition
10-52	**Runway Safety Area (RSA)**	A defined surface surrounding the runway prepared or suitable for reducing the risk of damage to aircraft. See the construction safety and phasing plan (CSPP) for limits of the RSA.
10-53	**Safety Plan Compliance Document (SPCD)**	Details how the Contractor will comply with the CSPP.
10-54	**Specifications**	A part of the contract containing the written directions and requirements for completing the contract work. Standards for specifying materials or testing which are cited in the contract specifications by reference shall have the same force and effect as if included in the contract physically.
10-55	**Sponsor**	A Sponsor is defined in 49 USC § 47102(24) as a public agency that submits to the FAA for an AIP grant; or a private Owner of a public-use airport that submits to the FAA an application for an AIP grant for the airport.
10-56	**Structures**	Airport facilities such as bridges; culverts; catch basins, inlets, retaining walls, cribbing; storm and sanitary sewer lines; water lines; underdrains; electrical ducts, manholes, handholes, lighting fixtures and bases; transformers; navigational aids; buildings; vaults; and, other manmade features of the airport that may be encountered in the work and not otherwise classified herein.
10-57	**Subgrade**	The soil that forms the pavement foundation.
10-58	**Superintendent**	The Contractor's executive representative who is present on the work during progress, authorized to receive and fulfill instructions from the RPR, and who shall supervise and direct the construction.
10-59	**Supplemental Agreement**	A written agreement between the Contractor and the Owner that establishes the basis of payment and contract time adjustment, if any, for the work affected by the supplemental agreement. A supplemental agreement is required if: (1) in scope work would increase or decrease the total amount of the awarded contract by more than 25%: (2) in scope work would increase or decrease the total of any major contract item by more than 25%; (3) work that is not within the scope of the originally awarded contract; or (4) adding or deleting of a major contract item.
10-60	**Surety**	The corporate body which is bound with the CONTRACTOR and which engages to be responsible for the CONTRACTOR and his acceptable performance of the work and his payment of all debts pertaining to the work.
10-61	**Taxilane**	A taxiway designed for low speed movement of aircraft between aircraft parking areas and terminal areas.
10-62	**Taxiway**	The portion of the air operations area of an airport that has been designated by competent airport authority for movement of

Paragraph Number	Term	Definition
		aircraft to and from the airport's runways, aircraft parking areas, and terminal areas.
10-63	**Taxiway/Taxilane Safety Area (TSA)**	A defined surface alongside the taxiway prepared or suitable for reducing the risk of damage to an aircraft. See the construction safety and phasing plan (CSPP) for limits of the TSA.
10-64	**Work**	The furnishing of all labor, materials, tools, equipment, and incidentals necessary or convenient to the Contractor's performance of all duties and obligations imposed by the contract, plans, and specifications.
10-65	**Working day**	A working day shall be any day other than a legal holiday, Saturday, or Sunday on which the normal working forces of the Contractor may proceed with regular work for at least six (6) hours toward completion of the contract. When work is suspended for causes beyond the Contractor's control, it will not be counted as a working day. Saturdays, Sundays and holidays on which the Contractor's forces engage in regular work will be considered as working days.
10-66	Advisoiry Circular	A document issued by the FAA containing informational material and guidance. When referred to in the plans and specifications, advisory circulars shall have the same force as supplemental specifications.
10-67		The document designated in the Instructions to Bidders as the Contract Form, once it has been executed by both Contractor and Owner.
10-68		Standard FAA conditions of the Contract adopted into this Contract as Sections 10, 40, 50, 60, 70, 80, 90, and 100. Sections 20 and 30 are not used in this Contract.
10-69		The materials, systems and equipment to be incorporated into the work.
10-70		The bound documents comprising Bidding Requirements, Bid Forms, Contract Forms, General Conditions, Supplementary Conditions, Specifications, Addenda and modifications.
10-80		A public agency or a political subdivision of a State in who rests the title to the airport at which the construction under this contract is to be performed. Political subdivision refers to a County, City, Village, Township, or any combination or authority thereof as provided by law for the construction and operation of airports. The sponsor may also be referred to as the Owner in several parts of the contract.
10-81		The prequalified (where required) individual, partnership or corporation, or a combination thereof, undertaking the execution of a part of the work under the terms of the contract, by virtue of an agreement with the Contractor approved by the Owner.

Paragraph Number	Term	Definition
10-82		The point at which the Work (or a specified part thereof) has progressed to the point where, in the opinion of Engineer as evidenced by Engineer's definitive certificate of Substantial Completion, it is sufficiently complete, in accordance with the Contract Documents, so that the Work (or a specified part) can be utilized practically and efficiently for the purposes for which it is intended; or if there be no such certificate issued, when final payment is due in accordance with Section 90. The terms "substantially complete" and "substantially completed" as applied to any Work refer to "Substantial Completion thereof."

END OF SECTION 10

Section 20 Proposal Requirements and Conditions

20-01 Advertisement (Notice to Bidders).

THIS SECTION NOT USED. REFER TO INSTRUCTIONS TO BIDDERS FOR BID REQUIREMENTS AND CONDITIONS.

END OF SECTION 20

Section 30 Award and Execution of Contract

THIS SECTION NOT USED. REFER TO INSTRUCTIONS TO BIDDERS FOR AWARD AND EXECUTION OF CONTRACT

END OF SECTION 30

Section 40

Scope of Work

40-01 Intent of contract. The intent of the contract is to provide for construction and completion, in every detail, of the work described. It is further intended that the Contractor shall furnish all labor, materials, equipment, tools, transportation, and supplies required to complete the work in accordance with the plans, specifications, and terms of the contract.

40-02 Alteration of work and quantities. The Owner reserves the right to make such changes in quantities and work as may be necessary or desirable to complete, in a satisfactory manner, the original intended work. Unless otherwise specified in the Contract, the Owner's Engineer or RPR shall be and is hereby authorized to make, in writing, such in-scope alterations in the work and variation of quantities as may be necessary to complete the work, provided such action does not represent a significant change in the character of the work.

For purpose of this section, a significant change in character of work means: any change that is outside the current contract scope of work; any change (increase or decrease) in the total contract cost by more than 25%; or any change in the total cost of a major contract item by more than 25%.

Work alterations and quantity variances that do not meet the definition of significant change in character of work shall not invalidate the contract nor release the surety. Contractor agrees to accept payment for such work alterations and quantity variances in accordance with Section 90, paragraph 90-03, *Compensation for Altered Quantities.*

Should the value of altered work or quantity variance meet the criteria for significant change in character of work, such altered work and quantity variance shall be covered by a supplemental agreement. Supplemental agreements shall also require consent of the Contractor's surety and separate performance and payment bonds. If the Owner and the Contractor are unable to agree on a unit adjustment for any contract item that requires a supplemental agreement, the Owner reserves the right to terminate the contract with respect to the item and make other arrangements for its completion.

40-03 Omitted items. The Owner, the Owner's Engineer or the RPR may provide written notice to the Contractor to omit from the work any contract item that does not meet the definition of major contract item. Major contract items may be omitted by a supplemental agreement. Such omission of contract items shall not invalidate any other contract provision or requirement.

Should a contract item be omitted or otherwise ordered to be non-performed, the Contractor shall be paid for all work performed toward completion of such item prior to the date of the order to omit such item. Payment for work performed shall be in accordance with Section 90, paragraph 90-04, *Payment for Omitted Items*.

40-04 Extra work. Should acceptable completion of the contract require the Contractor to perform an item of work not provided for in the awarded contract as previously modified by change order or supplemental agreement, Owner may issue a Change Order to cover the necessary extra work. Change orders for extra work shall contain agreed unit prices for performing the change order work in accordance with the requirements specified in the order, and shall contain any adjustment to the contract time that, in the RPR's opinion, is necessary for completion of the extra work.

When determined by the RPR to be in the Owner's best interest, the RPR may order the Contractor to proceed with extra work as provided in Section 90, paragraph 90-05, *Payment for Extra Work*. Extra work that is necessary for acceptable completion of the project, but is not within the general scope of the work

covered by the original contract shall be covered by a supplemental agreement as defined in Section 10, paragraph 10-59, *Supplemental Agreement*.

If extra work is essential to maintaining the project critical path, RPR may order the Contractor to commence the extra work under a Time and Material contract method. Once sufficient detail is available to establish the level of effort necessary for the extra work, the Owner shall initiate a change order or supplemental agreement to cover the extra work.

Any claim for payment of extra work that is not covered by written agreement (change order or supplemental agreement) shall be rejected by the Owner.

40-05 Maintenance of traffic. It is the explicit intention of the contract that the safety of aircraft, as well as the Contractor's equipment and personnel, is the most important consideration. The Contractor shall maintain traffic in the manner detailed in the Construction Safety and Phasing Plan (CSPP).

a. It is understood and agreed that the Contractor shall provide for the free and unobstructed movement of aircraft in the air operations areas (AOAs) of the airport with respect to their own operations and the operations of all subcontractors as specified in Section 80, paragraph 80-04, *Limitation of Operations*. It is further understood and agreed that the Contractor shall provide for the uninterrupted operation of visual and electronic signals (including power supplies thereto) used in the guidance of aircraft while operating to, from, and upon the airport as specified in Section 70, paragraph 70-15, *Contractor's Responsibility for Utility Service and Facilities of Others*.

b. With respect to their own operations and the operations of all subcontractors, the Contractor shall provide marking, lighting, and other acceptable means of identifying personnel, equipment, vehicles, storage areas, and any work area or condition that may be hazardous to the operation of aircraft, fire-rescue equipment, or maintenance vehicles at the airport in accordance with the construction safety and phasing plan (CSPP) and the safety plan compliance document (SPCD).

c. When the contract requires the maintenance of an existing road, street, or highway during the Contractor's performance of work that is otherwise provided for in the contract, plans, and specifications, the Contractor shall keep the road, street, or highway open to all traffic and shall provide maintenance as may be required to accommodate traffic. The Contractor, at their expense, shall be responsible for the repair to equal or better than preconstruction conditions of any damage caused by the Contractor's equipment and personnel. The Contractor shall furnish, erect, and maintain barricades, warning signs, flag person, and other traffic control devices in reasonable conformity with the Manual on Uniform Traffic Control Devices (MUTCD) (http://mutcd.fhwa.dot.gov/), unless otherwise specified. The Contractor shall also construct and maintain in a safe condition any temporary connections necessary for ingress to and egress from abutting property or intersecting roads, streets or highways. **[** `Unless otherwise specified herein, the Contractor will not be required to furnish snow removal for such existing road, street, or highway.` **]**

40-06 Removal of existing structures. All existing structures encountered within the established lines, grades, or grading sections shall be removed by the Contractor, unless such existing structures are otherwise specified to be relocated, adjusted up or down, salvaged, abandoned in place, reused in the work or to remain in place. The cost of removing such existing structures shall not be measured or paid for directly, but shall be included in the various contract items.

Should the Contractor encounter an existing structure (above or below ground) in the work for which the disposition is not indicated on the plans, the Resident Project Representative (RPR) shall be notified prior to disturbing such structure. The disposition of existing structures so encountered shall be immediately determined by the RPR in accordance with the provisions of the contract.

Except as provided in Section 40, paragraph 40-07, *Rights in and Use of Materials Found in the Work*, it is intended that all existing materials or structures that may be encountered (within the lines, grades, or grading sections established for completion of the work) shall be used in the work as otherwise provided for in the contract and shall remain the property of the Owner when so used in the work.

40-07 Rights in and use of materials found in the work. Should the Contractor encounter any material such as (but not restricted to) sand, stone, gravel, slag, or concrete slabs within the established lines, grades, or grading sections, the use of which is intended by the terms of the contract to be embankment, the Contractor may at their own option either:

a. Use such material in another contract item, providing such use is approved by the RPR and is in conformance with the contract specifications applicable to such use; or,

b. Remove such material from the site, upon written approval of the RPR; or

c. Use such material for the Contractor's own temporary construction on site; or,

d. Use such material as intended by the terms of the contract.

Should the Contractor wish to exercise option a., b., or c., the Contractor shall request the RPR's approval in advance of such use.

Should the RPR approve the Contractor's request to exercise option a., b., or c., the Contractor shall be paid for the excavation or removal of such material at the applicable contract price. The Contractor shall replace, at their expense, such removed or excavated material with an agreed equal volume of material that is acceptable for use in constructing embankment, backfills, or otherwise to the extent that such replacement material is needed to complete the contract work. The Contractor shall not be charged for use of such material used in the work or removed from the site.

Should the RPR approve the Contractor's exercise of option a., the Contractor shall be paid, at the applicable contract price, for furnishing and installing such material in accordance with requirements of the contract item in which the material is used.

It is understood and agreed that the Contractor shall make no claim for delays by reason of their own exercise of option a., b., or c.

The Contractor shall not excavate, remove, or otherwise disturb any material, structure, or part of a structure which is located outside the lines, grades, or grading sections established for the work, except where such excavation or removal is provided for in the contract, plans, or specifications.

40-08 Final cleanup. Upon completion of the work and before acceptance and final payment will be made, the Contractor shall remove from the site all machinery, equipment, surplus and discarded materials, rubbish, temporary structures, and stumps or portions of trees. The Contractor shall cut all brush and woods within the limits indicated and shall leave the site in a neat and presentable condition. Material cleared from the site and deposited on adjacent property will not be considered as having been disposed of satisfactorily, unless the Contractor has obtained the written permission of the property Owner.

40-09 Access to the Work. Access to the work will be via the access routes shown on the plans or as directed by the Engineer. The Contractor shall identify access routes with suitable signs, barricades and similar equipment.

The entire access route and construction site shall be kept free and clean of all debris at all times and maintained in good repair by the Contractor. All damage to the access route caused by the actions of the Contractor or his agents shall be immediately repaired to the satisfaction of the Owner.

No additional payment will be made to the Contractor for complying with the requirements of this subsection.

No other access to the work sites will be permitted without written approval by the Engineer. Contractor's vehicles and equipment, including vehicles and equipment of subcontractors and others coming under the Contractor's control, will not be permitted to traverse other airfield areas or pavements without written approval of the Engineer.

Contractor's vehicles, equipment, and materials may be stored in the area designated on the Plans, or by the Engineer. Upon completion of the work, the storage area shall be cleaned up and returned to its original condition to the satisfaction of the Engineer. No special payment will be made for clean up and restoration of the storage area.

Space will be allotted by the Engineer for the use of employees of the Contractor and his subcontractor(s) for the daily parking of their automobiles during the construction period. Personal vehicles of employees and vehicles operated by vendors of goods or services will not be permitted beyond the Contractor's parking area. Drivers of vehicles being operated beyond this area shall be subject to loss of permission to enter the construction site.

END OF SECTION 40

Section 50

Control of Work

50-01 Authority of the Resident Project Representative (RPR). The RPR has final authority regarding the interpretation of project specification requirements. The RPR shall determine acceptability of the quality of materials furnished, method of performance of work performed, and the manner and rate of performance of the work. The RPR does not have the authority to accept work that does not conform to specification requirements.

50-02 Conformity with plans and specifications. All work and all materials furnished shall be in reasonably close conformity with the lines, grades, grading sections, cross-sections, dimensions, material requirements, and testing requirements that are specified (including specified tolerances) in the contract, plans, or specifications.

If the RPR finds the materials furnished, work performed, or the finished product not within reasonably close conformity with the plans and specifications, but that the portion of the work affected will, in their opinion, result in a finished product having a level of safety, economy, durability, and workmanship acceptable to the Owner, the RPR will advise the Owner of their determination that the affected work be accepted and remain in place. The RPR will document the determination and recommend to the Owner a basis of acceptance that will provide for an adjustment in the contract price for the affected portion of the work. Changes in the contract price must be covered by contract change order or supplemental agreement as applicable.

If the RPR finds the materials furnished, work performed, or the finished product are not in reasonably close conformity with the plans and specifications and have resulted in an unacceptable finished product, the affected work or materials shall be removed and replaced or otherwise corrected by and at the expense of the Contractor in accordance with the RPR's written orders.

The term "reasonably close conformity" shall not be construed as waiving the Contractor's responsibility to complete the work in accordance with the contract, plans, and specifications. The term shall not be construed as waiving the RPR's responsibility to insist on strict compliance with the requirements of the contract, plans, and specifications during the Contractor's execution of the work, when, in the RPR's opinion, such compliance is essential to provide an acceptable finished portion of the work.

The term "reasonably close conformity" is also intended to provide the RPR with the authority, after consultation with the Sponsor and FAA, to use sound engineering judgment in their determinations to accept work that is not in strict conformity, but will provide a finished product equal to or better than that required by the requirements of the contract, plans and specifications.

The RPR will not be responsible for the Contractor's means, methods, techniques, sequences, or procedures of construction or the safety precautions incident thereto.

50-03 Coordination of contract, plans, and specifications.

From time to time, discrepancies within cited testing standards occur due to the timing of the change, edits, and/or replacement of the standards. If the Contractor discovers any apparent discrepancy within standard test methods, the Contractor shall immediately ask the RPR for an interpretation and decision, and such decision shall be final.

The contract, plans, specifications, and all referenced standards cited are essential parts of the contract requirements. A requirement occurring in one is as binding as though occurring in all. They are intended to be complementary and to describe and provide for a complete work. In resolving conflicts, discrepancies,

or errors in the various contract documents, the documents shall be given the order of precedence, as follows: Agreement, Supplemental Agreement, Change Order, Addenda, Plans, Specifications, and General Provisions. In case of discrepancy, figured dimensions, unless obviously incorrect, shall govern over scaled dimensions. Cited standards for materials or testing, and cited FAA Advisory Circulars shall be considered as standard specifications.

Any table, gradation, size, dimension, rate, mix, method, nomenclature, pay item number, basis of payment or method of measurement shown on the plans, which is at variance with the standard specifications, shall be considered an amendment or supplement to the applicable specification.

The Contractor shall not take advantage of any apparent error or omission on the plans or specifications. In the event the Contractor discovers any apparent error or discrepancy, Contractor shall immediately notify the Owner or the designated representative in writing requesting their written interpretation and decision.

50-04 List of Special Provisions. Not Used

50-05 Cooperation of Contractor. The Contractor shall be supplied with an electronic PDF of the plans and specifications. The Contractor shall be responsible for printing of any hard (paper) copies he needs and shall have available at the construction site at all times one hardcopy each of the plans and specifications.

The Contractor shall give constant attention to the work to facilitate the progress thereof, and shall cooperate with the RPR and their inspectors and with other Contractors in every way possible. The Contractor shall have a competent superintendent on the work at all times who is fully authorized as their agent on the work. The superintendent shall be capable of reading and thoroughly understanding the plans and specifications and shall receive and fulfill instructions from the RPR or their authorized representative.

50-06 Cooperation between Contractors. The Owner reserves the right to contract for and perform other or additional work on or near the work covered by this contract.

When separate contracts are let within the limits of any one project, each Contractor shall conduct the work not to interfere with or hinder the progress of completion of the work being performed by other Contractors. Contractors working on the same project shall cooperate with each other as directed.

Each Contractor involved shall assume all liability, financial or otherwise, in connection with their own contract and shall protect and hold harmless the Owner from any and all damages or claims that may arise because of inconvenience, delays, or loss experienced because of the presence and operations of other Contractors working within the limits of the same project.

The Contractor shall arrange their work and shall place and dispose of the materials being used to not interfere with the operations of the other Contractors within the limits of the same project. The Contractor shall join their work with that of the others in an acceptable manner and shall perform it in proper sequence to that of the others.

50-07 Construction layout and stakes.

Electronic files of the survey shall be available in AutoCadd 3D format by Autodesk Inc. with a signed and sealed hard copy

Utilizing the data shown on the plans and/or furnished by the Engineer, the Contractor shall establish all horizontal and vertical controls necessary to construct the work in conformance with the plans and specifications. The work shall include performing all calculations required and setting all stakes needed, such as offset stakes, reference point stakes, slope stakes, and other reference marks or points necessary to

provide lines and grades for construction.

The Contractor shall employ only competent personnel and utilize only suitable equipment in performing layout work.

He shall not engage the services of any person or persons in the employ of the Engineer for performance of layout work.

Adequate field notes and records shall be kept as layout work is accomplished. These field notes and records shall be available for review by the Engineer as the work progresses and copies shall be furnished to the Engineer at the time of completion of the project. Any inspection or checking of the Contractor's field notes or layout work by the Engineer and the acceptance of all or any part thereof shall not relieve the Contractor of his responsibility to achieve the lines, grades, and dimensions shown in the plans and specifications.

No direct payment will be made, unless otherwise specified in contract documents, for this labor, materials, or other expenses. The cost shall be included in the price of the bid for the various items of the Contract.

50-08 Authority and duties of Quality Assurance (QA) inspectors. QA inspectors shall be authorized to inspect all work done and all material furnished. Such QA inspection may extend to all or any part of the work and to the preparation, fabrication, or manufacture of the materials to be used. QA inspectors are not authorized to revoke, alter, or waive any provision of the contract. QA inspectors are not authorized to issue instructions contrary to the plans and specifications or to act as foreman for the Contractor.

QA Inspectors are authorized to notify the Contractor or their representatives of any failure of the work or materials to conform to the requirements of the contract, plans, or specifications and to reject such nonconforming materials in question until such issues can be referred to the RPR for a decision.

50-09 Inspection of the work. All materials and each part or detail of the work shall be subject to inspection. The RPR shall be allowed access to all parts of the work and shall be furnished with such information and assistance by the Contractor as is required to make a complete and detailed inspection.

If the RPR requests it, the Contractor, at any time before acceptance of the work, shall remove or uncover such portions of the finished work as may be directed. After examination, the Contractor shall restore said portions of the work to the standard required by the specifications. Should the work thus exposed or examined prove acceptable, the uncovering, or removing, and the replacing of the covering or making good of the parts removed will be paid for as extra work; but should the work so exposed or examined prove unacceptable, the uncovering, or removing, and the replacing of the covering or making good of the parts removed will be at the Contractor’s expense.

Provide advance written notice to the RPR of work the Contractor plans to perform each week and each day. Any work done or materials used without written notice and allowing opportunity for inspection by the RPR may be ordered removed and replaced at the Contractor’s expense.

Should the contract work include relocation, adjustment, or any other modification to existing facilities, not the property of the (contract) Owner, authorized representatives of the Owners of such facilities shall have the right to inspect such work. Such inspection shall in no sense make any facility owner a party to the contract, and shall in no way interfere with the rights of the parties to this contract.

50-10 Removal of unacceptable and unauthorized work. All work that does not conform to the requirements of the contract, plans, and specifications will be considered unacceptable, unless otherwise

determined acceptable by the RPR as provided in paragraph 50-02, *Conformity with Plans and Specifications*.

Unacceptable work, whether the result of poor workmanship, use of defective materials, damage through carelessness, or any other cause found to exist prior to the final acceptance of the work, shall be removed immediately and replaced in an acceptable manner in accordance with the provisions of Section 70, paragraph 70-14, *Contractor's Responsibility for Work*.

No removal work made under provision of this paragraph shall be done without lines and grades having been established by the RPR. Work done contrary to the instructions of the RPR, work done beyond the lines shown on the plans or as established by the RPR, except as herein specified, or any extra work done without authority, will be considered as unauthorized and will not be paid for under the provisions of the contract. Work so done may be ordered removed or replaced at the Contractor's expense.

Upon failure on the part of the Contractor to comply with any order of the RPR made under the provisions of this subsection, the RPR will have authority to cause unacceptable work to be remedied or removed and replaced; and unauthorized work to be removed and recover the resulting costs as a liquidated damage against the Contractor.

50-11 Load restrictions. The Contractor shall comply with all legal load restrictions in the hauling of materials on public roads beyond the limits of the work. A special permit will not relieve the Contractor of liability for damage that may result from the moving of material or equipment.

The operation of equipment of such weight or so loaded as to cause damage to structures or to any other type of construction will not be permitted. Hauling of materials over the base course or surface course under construction shall be limited as directed. No loads will be permitted on a concrete pavement, base, or structure before the expiration of the curing period. The Contractor, at their own expense, shall be responsible for the repair to equal or better than preconstruction conditions of any damage caused by the Contractor's equipment and personnel.

50-12 Maintenance during construction. The Contractor shall maintain the work during construction and until the work is accepted. Maintenance shall constitute continuous and effective work prosecuted day by day, with adequate equipment and forces so that the work is maintained in satisfactory condition at all times.

In the case of a contract for the placing of a course upon a course or subgrade previously constructed, the Contractor shall maintain the previous course or subgrade during all construction operations.

All costs of maintenance work during construction and before the project is accepted shall be included in the unit prices bid on the various contract items, and the Contractor will not be paid an additional amount for such work.

50-13 Failure to maintain the work. Should the Contractor at any time fail to maintain the work as provided in paragraph 50-12, *Maintenance during Construction*, the RPR shall immediately notify the Contractor of such noncompliance. Such notification shall specify a reasonable time within which the Contractor shall be required to remedy such unsatisfactory maintenance condition. The time specified will give due consideration to the exigency that exists.

Should the Contractor fail to respond to the RPR's notification, the Owner may suspend any work necessary for the Owner to correct such unsatisfactory maintenance condition, depending on the exigency that exists. Any maintenance cost incurred by the Owner, shall be recovered as a liquidated damage against the Contractor.

50-14 Partial acceptance. If at any time during the execution of the project the Contractor substantially completes a usable unit or portion of the work, the occupancy of which will benefit the Owner, the Contractor may request the RPR to make final inspection of that unit. If the RPR finds upon inspection that

the unit has been satisfactorily completed in compliance with the contract, the RPR may accept it as being complete, and the Contractor may be relieved of further responsibility for that unit. Such partial acceptance and beneficial occupancy by the Owner shall not void or alter any provision of the contract.

50-15 Final acceptance. Upon due notice from the Contractor of presumptive completion of the entire project, the RPR and Owner will make an inspection. If all construction provided for and contemplated by the contract is found to be complete in accordance with the contract, plans, and specifications, such inspection shall constitute the final inspection. The RPR shall notify the Contractor in writing of final acceptance as of the date of the final inspection.

If, however, the inspection discloses any work, in whole or in part, as being unsatisfactory, the RPR will notify the Contractor and the Contractor shall correct the unsatisfactory work. Upon correction of the work, another inspection will be made which shall constitute the final inspection, provided the work has been satisfactorily completed. In such event, the RPR will make the final acceptance and notify the Contractor in writing of this acceptance as of the date of final inspection.

50-16 Claims for adjustment and disputes. If for any reason the Contractor deems that additional compensation is due for work or materials not clearly provided for in the contract, plans, or specifications or previously authorized as extra work, the Contractor shall notify the RPR in writing of their intention to claim such additional compensation before the Contractor begins the work on which the Contractor bases the claim. If such notification is not given or the RPR is not afforded proper opportunity by the Contractor for keeping strict account of actual cost as required, then the Contractor hereby agrees to waive any claim for such additional compensation. Such notice by the Contractor and the fact that the RPR has kept account of the cost of the work shall not in any way be construed as proving or substantiating the validity of the claim. When the work on which the claim for additional compensation is based has been completed, the Contractor shall, within 10 calendar days, submit a written claim to the RPR who will present it to the Owner for consideration in accordance with local laws or ordinances.

Nothing in this subsection shall be construed as a waiver of the Contractor's right to dispute final payment based on differences in measurements or computations.

The following documentation and information must be presented in order for the Engineer to properly evaluate such claim:

a. Definition of the basis of the claim, including a detailed identification of which materials and what work is considered to represent a change to the original contract, an explanation of why the work or material is different than what was called for by the original contract, and an identification of the contract provisions and anything else which the Contract relied upon;

b. An explanation of how and why the work which is considered a change resulted in any additional cost or performance time for the Contractor;

c. An identification of the categories of additional costs which were incurred, an estimate of the dollar magnitude of each, and a statement of the impact this work will have on the construction schedule, including the contract completion dates;

d. An indication of how the additional costs which is believed that were incurred can be, and are to be, quantified;

e. Documentation of any actual additional costs and any actual impact to the construction schedule due to this work;

f. Documentation of the cost of performing all similar "unchanged" work, to provide the Engineer a basis for comparison;

g. All backup and other documentation which are believed to support or relate to the claim;

Documentation quantifying the amount of work which is believed to constitute this "changed" work, and the time period and the areas where such work was performed.

The giving of a timely notice of a potential claim prior to undertaking the work which is the subject of the claim, and the submittal of the above listed information for claim evaluation within ten days after the work is completed, are conditions precedent to the making of the claim, to recovery thereon, and to the bringing of a legal action for the resolution thereof.

50-17 Retest of Work. When as provided for in the contract documents, the Owner performs sampling and tests of the work and the tests show a failure to meet the requirements of the contract documents, the expense of retesting, after reworking or substitution by the Contractor will be at the expense of the Contractor and such costs will be deducted from the payments otherwise due to the Contractor.

50-18 Correction of Work After Final Payment. Neither the final certificate nor payment, nor any provision in the contract documents shall relieve the Contractor of responsibility for faulty materials or workmanship and, unless otherwise specified, he shall remedy any defect due thereto and pay for any damage to other work resulting therefrom, which shall appear within a period of one year from date of final acceptance. Wherever the word "acceptance" occurs, it shall be understood to mean final acceptance.

The Owner shall give notice of observed defects with reasonable promptness. If the Contractor fails to remedy any failure, defect, or damage within a reasonable time after the receipt of notice, the Owner shall have the right to replace, repair, or otherwise remedy the failure, defect, or damage at the Contractor's expense. With respect to all warranties, expressed or implied, from subcontractors, manufacturer, or suppliers for work performed and materials furnished under this Contract, the Contractor shall:

a. Obtain all warranties that would be given in normal commercial practice;

b. Require all warranties to be executed, in writing, for the benefit of the Owner.

50-19 Venue. This contract has been executed by, delivered to and accepted by the Owner in the state where the Airport is located, and the provisions hereof shall be governed by the laws of that state. Any disputes arising out of or related to this contract shall be resolved in accordance with said laws.

The parties agree that any action or legal proceeding arising out of or related to this contract shall be brought in the state courts of the county in which the Airport lies, or in the federal court in the district where the Airport is located; and the parties hereby consent to and waive any objection to jurisdiction or venue in said courts.

END OF SECTION 50

Section 60

Control of Materials

60-01 Source of supply and quality requirements. The materials used in the work shall conform to the requirements of the contract, plans, and specifications. Unless otherwise specified, such materials that are manufactured or processed shall be new (as compared to used or reprocessed).

In order to expedite the inspection and testing of materials, the Contractor shall furnish documentation to the RPR as to the origin, composition, and manufacture of all materials to be used in the work. Documentation shall be furnished promptly after execution of the contract but, in all cases, prior to delivery of such materials.

At the RPR's option, materials may be approved at the source of supply before delivery. If it is found after trial that sources of supply for previously approved materials do not produce specified products, the Contractor shall furnish materials from other sources.

The Contractor shall furnish airport lighting equipment that meets the requirements of the specifications; and is listed in AC 150/5345-53, *Airport Lighting Equipment Certification Program* and *Addendum*, that is in effect on the date of advertisement.

60-02 Samples, tests, and cited specifications. All materials used in the work shall be inspected, tested, and approved by the RPR before incorporation in the work unless otherwise designated. Any work in which untested materials are used without approval or written permission of the RPR shall be performed at the Contractor's risk. Materials found to be unacceptable and unauthorized will not be paid for and, if directed by the RPR, shall be removed at the Contractor's expense.

Unless otherwise designated, quality assurance tests will be made by and at the expense of the Owner in accordance with the cited standard methods of ASTM, American Association of State Highway and Transportation Officials (AASHTO), federal specifications, Commercial Item Descriptions, and all other cited methods, which are current on the date of advertisement for bids.

The testing organizations performing on-site quality assurance field tests shall have copies of all referenced standards on the construction site for use by all technicians and other personnel. Unless otherwise designated, samples for quality assurance will be taken by a qualified representative of the RPR. All materials being used are subject to inspection, test, or rejection at any time prior to or during incorporation into the work. Copies of all tests will be furnished to the Contractor's representative at their request after review and approval of the RPR.

A copy of all Contractor QC test data shall be provided to the RPR daily, along with printed reports, in an approved format, on a weekly basis. After completion of the project, and prior to final payment, the Contractor shall submit a final report to the RPR showing all test data reports, plus an analysis of all results showing ranges, averages, and corrective action taken on all failing tests.

In the event that any tests show a failure to meet the requirements of the contract documents, the expense of retesting, after substitution or modification by the Contractor, will be at the expense of the Contractor and such costs will be deducted from the payments otherwise due to the Contractor. The Contractor shall give sufficient notification of the placing of orders for materials to permit testing. The Contractor shall employ a Quality Control (QC) testing organization to perform all Contractor required QC tests in accordance with Item C-100 Contractor Quality Control Program (CQCP).

60-03 Certification of compliance/analysis (COC/COA). The RPR may permit the use, prior to sampling and testing, of certain materials or assemblies when accompanied by manufacturer's COC stating that such materials or assemblies fully comply with the requirements of the contract. The certificate shall be signed by the manufacturer. Each lot of such materials or assemblies delivered to the work must be accompanied by a certificate of compliance in which the lot is clearly identified. The COA is the manufacturer's COC and includes all applicable test results.

Materials or assemblies used on the basis of certificates of compliance may be sampled and tested at any time and if found not to be in conformity with contract requirements will be subject to rejection whether in place or not.

The form and distribution of certificates of compliance shall be as approved by the RPR.

When a material or assembly is specified by "brand name or equal" and the Contractor elects to furnish the specified "or equal," the Contractor shall be required to furnish the manufacturer's certificate of compliance for each lot of such material or assembly delivered to the work. Such certificate of compliance shall clearly identify each lot delivered and shall certify as to:

a. Conformance to the specified performance, testing, quality or dimensional requirements; and,

b. Suitability of the material or assembly for the use intended in the contract work.

The RPR shall be the sole judge as to whether the proposed "or equal" is suitable for use in the work.

The RPR reserves the right to refuse permission for use of materials or assemblies on the basis of certificates of compliance.

60-04 Plant inspection. The RPR or their authorized representative may inspect, at its source, any specified material or assembly to be used in the work. Manufacturing plants may be inspected from time to time for the purpose of determining compliance with specified manufacturing methods or materials to be used in the work and to obtain samples required for acceptance of the material or assembly.

Should the RPR conduct plant inspections, the following conditions shall exist:

a. The RPR shall have the cooperation and assistance of the Contractor and the producer with whom the Contractor has contracted for materials.

b. The RPR shall have full entry at all reasonable times to such parts of the plant that concern the manufacture or production of the materials being furnished.

c. If required by the RPR, the Contractor shall arrange for adequate office or working space that may be reasonably needed for conducting plant inspections. Place office or working space in a convenient location with respect to the plant.

It is understood and agreed that the Owner shall have the right to retest any material that has been tested and approved at the source of supply after it has been delivered to the site. The RPR shall have the right to reject only material which, when retested, does not meet the requirements of the contract, plans, or specifications.

60-05 Engineer/ Resident Project Representative (RPR) field office. The Contractor shall provide dedicated space for the use of the engineer, RPR, and inspectors, as a field office for the duration of the project. This space shall be located conveniently near the construction and shall be separate from any space used by the Contractor. The Contractor shall furnish water, sanitary facilities, heat, air conditioning, and electricity.

60-06 Storage of materials. Materials shall be stored to assure the preservation of their quality and fitness for the work. Stored materials, even though approved before storage, may again be inspected prior to their use in the work. Stored materials shall be located to facilitate their prompt inspection. The Contractor shall coordinate the storage of all materials with the RPR. Materials to be stored on airport property shall not create an obstruction to air navigation nor shall they interfere with the free and unobstructed movement of aircraft. Unless otherwise shown on the plans and/or CSPP, the storage of materials and the location of the Contractor's plant and parked equipment or vehicles shall be as directed by the RPR. Private property shall not be used for storage purposes without written permission of the Owner or lessee of such property. The Contractor shall make all arrangements and bear all expenses for the storage of materials on private property. Upon request, the Contractor shall furnish the RPR a copy of the property Owner's permission.

All storage sites on private or airport property shall be restored to their original condition by the Contractor at their expense, except as otherwise agreed to (in writing) by the Owner or lessee of the property.

60-07 Unacceptable materials. Any material or assembly that does not conform to the requirements of the contract, plans, or specifications shall be considered unacceptable and shall be rejected. The Contractor shall remove any rejected material or assembly from the site of the work, unless otherwise instructed by the RPR.

Rejected material or assembly, the defects of which have been corrected by the Contractor, shall not be returned to the site of the work until such time as the RPR has approved its use in the work.

60-08 Owner furnished materials. The Contractor shall furnish all materials required to complete the work, except those specified, if any, to be furnished by the Owner. Owner-furnished materials shall be made available to the Contractor at the location specified.

All costs of handling, transportation from the specified location to the site of work, storage, and installing Owner-furnished materials shall be included in the unit price bid for the contract item in which such Owner-furnished material is used.

After any Owner-furnished material has been delivered to the location specified, the Contractor shall be responsible for any demurrage, damage, loss, or other deficiencies that may occur during the Contractor's handling, storage, or use of such Owner-furnished material. The Owner will deduct from any monies due or to become due the Contractor any cost incurred by the Owner in making good such loss due to the Contractor's handling, storage, or use of Owner-furnished materials.

END OF SECTION 60

Section 70

Legal Regulations and Responsibility to Public

70-01 Laws to be observed. The Contractor shall keep fully informed of all federal and state laws, all local laws, ordinances, and regulations and all orders and decrees of bodies or tribunals having any jurisdiction or authority, which in any manner affect those engaged or employed on the work, or which in any way affect the conduct of the work. The Contractor shall at all times observe and comply with all such laws, ordinances, regulations, orders, and decrees; and shall protect and indemnify the Owner and all their officers, agents, or servants against any claim or liability arising from or based on the violation of any such law, ordinance, regulation, order, or decree, whether by the Contractor or the Contractor's employees.

If the Contractor observes that the drawings and specifications are at variance with any laws, codes, ordinances, and regulations, he shall promptly notify the Engineer in writing, and any necessary changes shall be adjusted as provided in the contract for changes in the work. If the Contractor performs any work contrary to such laws, codes, ordinances, and regulations, and without such notice to the Engineer, he shall bear all costs arising therefrom.**70-02 Permits, licenses, and taxes**. The Contractor shall procure all permits and licenses, pay all charges, fees, and taxes, and give all notices necessary and incidental to the due and lawful execution of the work.

70-03 Patented devices, materials, and processes. If the Contractor is required or desires to use any design, device, material, or process covered by letters of patent or copyright, the Contractor shall provide for such use by suitable legal agreement with the Patentee or Owner. The Contractor and the surety shall indemnify and hold harmless the Owner, any third party, or political subdivision from any and all claims for infringement by reason of the use of any such patented design, device, material or process, or any trademark or copyright, and shall indemnify the Owner for any costs, expenses, and damages which it may be obliged to pay by reason of an infringement, at any time during the execution or after the completion of the work.

70-04 Restoration of surfaces disturbed by others. The Owner reserves the right to authorize the construction, reconstruction, or maintenance of any public or private utility service, FAA or National Oceanic and Atmospheric Administration (NOAA) facility, or a utility service of another government agency at any time during the progress of the work. To the extent that such construction, reconstruction, or maintenance has been coordinated with the Owner, such authorized work (by others) must be shown on the plans and is indicated as follows: **N/A**.

Except as listed above, the Contractor shall not permit any individual, firm, or corporation to excavate or otherwise disturb such utility services or facilities located within the limits of the work without the written permission of the RPR.

Should the Owner of public or private utility service, FAA, or NOAA facility, or a utility service of another government agency be authorized to construct, reconstruct, or maintain such utility service or facility during the progress of the work, the Contractor shall cooperate with such Owners by arranging and performing the work in this contract to facilitate such construction, reconstruction or maintenance by others whether or not such work by others is listed above. When ordered as extra work by the RPR, the Contractor shall make all necessary repairs to the work which are due to such authorized work by others, unless otherwise provided for in the contract, plans, or specifications. It is understood and agreed that the Contractor shall not be entitled to make any claim for damages due to such authorized work by others or for any delay to the work resulting from such authorized work.

70-05 Federal Participation. The United States Government has agreed to reimburse the Owner for some portion of the contract costs. The contract work is subject to the inspection and approval of duly authorized representatives of the FAA Administrator. No requirement of this contract shall be construed as making the United States a party to the contract nor will any such requirement interfere, in any way, with the rights of either party to the contract.

The attention of the Contractor is also invited to the fact that the State in which this project is located may pay a portion of the cost of this improvement. In accordance with said State's rules and regulations, work will be subject to such inspection of the State, or its representative, as deemed necessary to protect the interests of the people of the State. The Contractor shall furnish the inspecting party with every reasonable assistance to ascertain whether or not the requirements and intent of the contract are being met. Such inspections will in no way infer that the State is party to the contract, except for those contracts wherein the State is a signatory.

70-06 Sanitary, health, and safety provisions. The Contractor's worksite and facilities shall comply with applicable federal, state, and local requirements for health, safety and sanitary provisions.

70-07 Public convenience and safety. The Contractor shall control their operations and those of their subcontractors and all suppliers, to assure the least inconvenience to the traveling public. Under all circumstances, safety shall be the most important consideration.

The Contractor shall maintain the free and unobstructed movement of aircraft and vehicular traffic with respect to their own operations and those of their own subcontractors and all suppliers in accordance with Section 40, paragraph 40-05, *Maintenance of Traffic,* and shall limit such operations for the convenience and safety of the traveling public as specified in Section 80, paragraph 80-04, *Limitation of Operations*.

The Contractor shall remove or control debris and rubbish resulting from its work operations at frequent intervals, and upon the order of the RPR. If the RPR determines the existence of Contractor debris in the work site represents a hazard to airport operations and the Contractor is unable to respond in a prompt and reasonable manner, the RPR reserves the right to assign the task of debris removal to a third party and recover the resulting costs as a liquidated damage against the Contractor.

The Contractor shall provide initial and continuing instructions to all supervisors, employees, subcontractors, and suppliers to enable them to conduct their work in a manner that will provide the maximum safety with the least hindrance to air and ground traffic, the general public, airport employees, and to the workmen employed on the site.

All safety provisions specified by the plans and documents or received from the Engineer, and those required by laws, codes and ordinances, shall be thoroughly disseminated and rigidly enforced.

70-08 Construction Safety and Phasing Plan (CSPP). The Contractor shall complete the work in accordance with the approved Construction Safety and Phasing Plan (CSPP) developed in accordance with AC 150/5370-2, Operational Safety on Airports During Construction. The CSPP is on sheet(s) **G3.1 to G3.4** of the project plans.

70-09 Use of explosives. **The use of explosives is not permitted on this project.**

70-10 Protection and restoration of property and landscape. The Contractor shall be responsible for the preservation of all public and private property, and shall protect carefully from disturbance or damage all land monuments and property markers until the Engineer/RPR has witnessed or otherwise referenced their location and shall not move them until directed.

The Contractor shall be responsible for all damage or injury to property of any character, during the execution of the work, resulting from any act, omission, neglect, or misconduct in manner or method of

executing the work, or at any time due to defective work or materials, and said responsibility shall not be released until the project has been completed and accepted.

When or where any direct or indirect damage or injury is done to public or private property by or on account of any act, omission, neglect, or misconduct in the execution of the work, or in consequence of the non-execution thereof by the Contractor, the Contractor shall restore, at their expense, such property to a condition similar or equal to that existing before such damage or injury was done, by repairing, or otherwise restoring as may be directed, or the Contractor shall make good such damage or injury in an acceptable manner.

Work that is to remain in place which is damaged or defaced by reasons of work performed under this contract shall be restored at no additional cost to the Owner.

Items removed, indicated to be salvaged for Owner or reused in new work, which are damaged beyond repair, shall be replaced with equal new materials under this contract at no additional cost to the Owner.

Existing pavement or other existing work not specified for removal which is temporarily removed, damaged, exposed, or in any way disturbed or altered by work under this contract shall be repaired, patched, or replaced to the complete satisfaction of the Engineer at no additional cost to the Owner.

Where it is necessary to cut, alter, remove, or temporarily remove and replace existing property or equipment, the cost shall be included in the contract price for the item creating such work.

70-11 Responsibility for damage claims. The Contractor shall indemnify and hold harmless the Engineer/RPR and the Owner and their officers, agents, and employees from all suits, actions, or claims, of any character, brought because of any injuries or damage received or sustained by any person, persons, or property on account of the operations of the Contractor; or on account of or in consequence of any neglect in safeguarding the work; or through use of unacceptable materials in constructing the work; or because of any act or omission, neglect, or misconduct of said Contractor; or because of any claims or amounts recovered from any infringements of patent, trademark, or copyright; or from any claims or amounts arising or recovered under the "Workmen's Compensation Act," or any other law, ordinance, order, or decree. Money due the Contractor under and by virtue of their own contract considered necessary by the Owner for such purpose may be retained for the use of the Owner or, in case no money is due, their own surety may be held until such suits, actions, or claims for injuries or damages shall have been settled and suitable evidence to that effect furnished to the Owner, except that money due the Contractor will not be withheld when the Contractor produces satisfactory evidence that he or she is adequately protected by public liability and property damage insurance.

70-12 Third party beneficiary clause. It is specifically agreed between the parties executing the contract that it is not intended by any of the provisions of any part of the contract to create for the public or any member thereof, a third-party beneficiary or to authorize anyone not a party to the contract to maintain a suit for personal injuries or property damage pursuant to the terms or provisions of the contract.

70-13 Opening sections of the work to traffic. If it is necessary for the Contractor to complete portions of the contract work for the beneficial occupancy of the Owner prior to completion of the entire contract, such "phasing" of the work must be specified below and indicated on the approved Construction Safety and Phasing Plan (CSPP) and the project plans. When so specified, the Contractor shall complete such portions of the work on or before the date specified or as otherwise specified.

See Plans.

Upon completion of any portion of work listed above, such portion shall be accepted by the Owner in accordance with Section 50, paragraph 50-14, *Partial Acceptance*.

No portion of the work may be opened by the Contractor until directed by the Owner in writing. Should it become necessary to open a portion of the work to traffic on a temporary or intermittent basis, such openings shall be made when, in the opinion of the RPR, such portion of the work is in an acceptable condition to support the intended traffic. Temporary or intermittent openings are considered to be inherent in the work and shall not constitute either acceptance of the portion of the work so opened or a waiver of any provision of the contract. Any damage to the portion of the work so opened that is not attributable to traffic which is permitted by the Owner shall be repaired by the Contractor at their expense.

The Contractor shall make their own estimate of the inherent difficulties involved in completing the work under the conditions herein described and shall not claim any added compensation by reason of delay or increased cost due to opening a portion of the contract work.

The Contractor must conform to safety standards contained AC 150/5370-2 and the approved CSPP.

Contractor shall refer to the plans, specifications, and the approved CSPP to identify barricade requirements, temporary and/or permanent markings, airfield lighting, guidance signs and other safety requirements prior to opening up sections of work to traffic.

70-14 Contractor's responsibility for work. Until the RPR's final written acceptance of the entire completed work, excepting only those portions of the work accepted in accordance with Section 50, paragraph 50-14, *Partial Acceptance*, the Contractor shall have the charge and care thereof and shall take every precaution against injury or damage to any part due to the action of the elements or from any other cause, whether arising from the execution or from the non-execution of the work. The Contractor shall rebuild, repair, restore, and make good all injuries or damages to any portion of the work occasioned by any of the above causes before final acceptance and shall bear the expense thereof except damage to the work due to unforeseeable causes beyond the control of and without the fault or negligence of the Contractor, including but not restricted to acts of God such as earthquake, tidal wave, tornado, hurricane or other cataclysmic phenomenon of nature, or acts of the public enemy or of government authorities.

If the work is suspended for any cause whatever, the Contractor shall be responsible for the work and shall take such precautions necessary to prevent damage to the work. The Contractor shall provide for normal drainage and shall erect necessary temporary structures, signs, or other facilities at their own expense. During such period of suspension of work, the Contractor shall properly and continuously maintain in an acceptable growing condition all living material in newly established planting, seeding, and sodding furnished under the contract, and shall take adequate precautions to protect new tree growth and other important vegetative growth against injury.

70-15 Contractor's responsibility for utility service and facilities of others. As provided in paragraph 70-04, *Restoration of Surfaces Disturbed by Others*, the Contractor shall cooperate with the owner of any public or private utility service, FAA or NOAA, or a utility service of another government agency that may be authorized by the Owner to construct, reconstruct or maintain such utility services or facilities during the progress of the work. In addition, the Contractor shall control their operations to prevent the unscheduled interruption of such utility services and facilities.

To the extent that such public or private utility services, FAA, or NOAA facilities, or utility services of another governmental agency are known to exist within the limits of the contract work, the approximate locations have been indicated on the plans and/or in the contract documents.

See Plans.

It is understood and agreed that the Owner does not guarantee the accuracy or the completeness of the location information relating to existing utility services, facilities, or structures that may be shown on the plans or encountered in the work. Any inaccuracy or omission in such information shall not relieve the

Contractor of the responsibility to protect such existing features from damage or unscheduled interruption of service.

It is further understood and agreed that the Contractor shall, upon execution of the contract, notify the Owners of all utility services or other facilities of their plan of operations. Such notification shall be in writing addressed to "The Person to Contact" as provided in this paragraph and paragraph 70-04, *Restoration of Surfaces Disturbed By Others*. A copy of each notification shall be given to the RPR.

In addition to the general written notification provided, it shall be the responsibility of the Contractor to keep such individual Owners advised of changes in their plan of operations that would affect such Owners.

Prior to beginning the work in the general vicinity of an existing utility service or facility, the Contractor shall again notify each such Owner of their plan of operation. If, in the Contractor's opinion, the Owner's assistance is needed to locate the utility service or facility or the presence of a representative of the Owner is desirable to observe the work, such advice should be included in the notification. Such notification shall be given by the most expeditious means to reach the utility owner's "Person to Contact" no later than two normal business days prior to the Contractor's commencement of operations in such general vicinity. The Contractor shall furnish a written summary of the notification to the RPR.

The Contractor's failure to give the two days' notice shall be cause for the Owner to suspend the Contractor's operations in the general vicinity of a utility service or facility.

Where the outside limits of an underground utility service have been located and staked on the ground, the Contractor shall be required to use hand excavation methods within 3 feet (1 m) of such outside limits at such points as may be required to ensure protection from damage due to the Contractor's operations.

Should the Contractor damage or interrupt the operation of a utility service or facility by accident or otherwise, the Contractor shall immediately notify the proper authority and the RPR and shall take all reasonable measures to prevent further damage or interruption of service. The Contractor, in such events, shall cooperate with the utility service or facility owner and the RPR continuously until such damage has been repaired and service restored to the satisfaction of the utility or facility owner.

The Contractor shall bear all costs of damage and restoration of service to any utility service or facility due to their operations whether due to negligence or accident. The Owner reserves the right to deduct such costs from any monies due or which may become due the Contractor, or their own surety.

70-15.1 FAA facilities and cable runs. **Not Applicable**

70-16 Furnishing rights-of-way. The Owner will be responsible for furnishing all rights-of-way upon which the work is to be constructed in advance of the Contractor's operations.

70-17 Personal liability of public officials. In carrying out any of the contract provisions or in exercising any power or authority granted by this contract, there shall be no liability upon the Engineer, RPR, their authorized representatives, or any officials of the Owner either personally or as an official of the Owner. It is understood that in such matters they act solely as agents and representatives of the Owner.

70-18 No waiver of legal rights. Upon completion of the work, the Owner will expeditiously make final inspection and notify the Contractor of final acceptance. Such final acceptance, however, shall not preclude or stop the Owner from correcting any measurement, estimate, or certificate made before or after completion of the work, nor shall the Owner be precluded or stopped from recovering from the Contractor or their surety, or both, such overpayment as may be sustained, or by failure on the part of the Contractor to fulfill their obligations under the contract. A waiver on the part of the Owner of any breach of any part of the contract shall not be held to be a waiver of any other or subsequent breach.

The Contractor, without prejudice to the terms of the contract, shall be liable to the Owner for latent defects, fraud, or such gross mistakes as may amount to fraud, or as regards the Owner's rights under any warranty or guaranty.

70-19 Environmental protection. The Contractor shall comply with all federal, state, and local laws and regulations controlling pollution of the environment. The Contractor shall take necessary precautions to prevent pollution of streams, lakes, ponds, and reservoirs with fuels, oils, asphalts, chemicals, or other harmful materials and to prevent pollution of the atmosphere from particulate and gaseous matter.70-20 Archaeological and historical findings. Unless otherwise specified in this subsection, the Contractor is advised that the site of the work is not within any property, district, or site, and does not contain any building, structure, or object listed in the current National Register of Historic Places published by the United States Department of Interior.

Should the Contractor encounter, during their operations, any building, part of a building, structure, or object that is incongruous with its surroundings, the Contractor shall immediately cease operations in that location and notify the RPR. The RPR will immediately investigate the Contractor's finding and the Owner will direct the Contractor to either resume operations or to suspend operations as directed.

Should the Owner order suspension of the Contractor's operations in order to protect an archaeological or historical finding, or order the Contractor to perform extra work, such shall be covered by an appropriate contract change order or supplemental agreement as provided in Section 40, paragraph 40-04, *Extra Work*, and Section 90, paragraph 90-05, *Payment for Extra Work*. If appropriate, the contract change order or supplemental agreement shall include an extension of contract time in accordance with Section 80, paragraph 80-07, *Determination and Extension of Contract Time.*

70-21 Insurance Requirements. Insurance requirements are in the Okaloosa County Standard Clauses contained in the Front End Documents section of the Project Manual

END OF SECTION 70

Section 80

Execution and Progress

80-01 Subletting of contract. The Owner will not recognize any subcontractor on the work. The Contractor shall at all times when work is in progress be represented either in person, by a qualified superintendent, or by other designated, qualified representative who is duly authorized to receive and execute orders of the Resident Project Representative (RPR).

The Contractor shall perform, with his organization, an amount of work equal to at least **40** percent of the total contract cost.

Should the Contractor elect to assign their contract, said assignment shall be concurred in by the surety, shall be presented for the consideration and approval of the Owner, and shall be consummated only on the written approval of the Owner.

The Contractor shall provide copies of all subcontracts to the RPR 14 days prior to being utilized on the project. As a minimum, the information shall include the following:

- Subcontractor's legal company name.
- Subcontractor's legal company address, including County name.
- Principal contact person's name, telephone and fax number.
- Complete narrative description, and dollar value of the work to be performed by the subcontractor.
- Copies of required insurance certificates in accordance with the specifications.
- Minority/ non-minority status.

80-02 Notice to proceed (NTP). The Owners notice to proceed will state the date on which contract time commences. The Contractor is expected to commence project operations within **10** days of the NTP date. The Contractor shall notify the RPR at least **24 hours** in advance of the time contract operations begins. The Contractor shall not commence any actual operations prior to the date on which the notice to proceed is issued by the Owner.

80-03 Execution and progress. Unless otherwise specified, the Contractor shall submit their coordinated construction schedule showing all work activities for the RPR's review and acceptance at least **[** 10 days **]** prior to the start of work. The Contractor's progress schedule, once accepted by the RPR, will represent the Contractor's baseline plan to accomplish the project in accordance with the terms and conditions of the Contract. The RPR will compare actual Contractor progress against the baseline schedule to determine that status of the Contractor's performance. The Contractor shall provide sufficient materials, equipment, and labor to guarantee the completion of the project in accordance with the plans and specifications within the time set forth in the proposal.

If the Contractor falls significantly behind the submitted schedule, the Contractor shall, upon the RPR's request, submit a revised schedule for completion of the work within the contract time and modify their operations to provide such additional materials, equipment, and labor necessary to meet the revised schedule. Should the execution of the work be discontinued for any reason, the Contractor shall notify the RPR at least **[** 24 hours **]** in advance of resuming operations.

The Contractor shall not commence any actual construction prior to the date on which the NTP is issued by the Owner.

The project schedule shall be prepared as a network diagram in Critical Path Method (CPM), Program Evaluation and Review Technique (PERT), or other format, or as otherwise specified. It shall include information on the sequence of work activities, milestone dates, and activity duration. The schedule shall show all work items identified in the project proposal for each work area and shall include the project start date and end date.

The Contractor shall maintain the work schedule and provide an update and analysis of the progress schedule on a **twice** monthly basis, or as otherwise specified in the contract. Submission of the work schedule shall not relieve the Contractor of overall responsibility for scheduling, sequencing, and coordinating all work to comply with the requirements of the contract.

80-04 Limitation of operations. The Contractor shall control their operations and the operations of their subcontractors and all suppliers to provide for the free and unobstructed movement of aircraft in the air operations areas (AOA) of the airport.

When the work requires the Contractor to conduct their operations within an AOA of the airport, the work shall be coordinated with airport operations (through the RPR) at least **48 hours** prior to commencement of such work. The Contractor shall not close an AOA until so authorized by the RPR and until the necessary temporary marking, signage and associated lighting is in place as provided in Section 70, paragraph 70-08, *Construction Safety and Phasing Plan (CSPP)*.

When the contract work requires the Contractor to work within an AOA of the airport on an intermittent basis (intermittent opening and closing of the AOA), the Contractor shall maintain constant communications as specified; immediately obey all instructions to vacate the AOA; and immediately obey all instructions to resume work in such AOA. Failure to maintain the specified communications or to obey instructions shall be cause for suspension of the Contractor's operations in the AOA until satisfactory conditions are provided. The areas of the AOA identified in the Construction Safety Phasing Plan (CSPP) and as listed below, cannot be closed to operating aircraft to permit the Contractor's operations on a continuous basis and will therefore be closed to aircraft operations intermittently as follows:

[See Plans]

The Contractor shall be required to conform to safety standards contained in AC 150/5370-2, Operational Safety on Airports During Construction and the approved CSPP.

80-04.1 Operational safety on airport during construction. All Contractors' operations shall be conducted in accordance with the approved project Construction Safety and Phasing Plan (CSPP) and the Safety Plan Compliance Document (SPCD) and the provisions set forth within the current version of AC 150/5370-2, Operational Safety on Airports During Construction. The CSPP included within the contract documents conveys minimum requirements for operational safety on the airport during construction activities. The Contractor shall prepare and submit a SPCD that details how it proposes to comply with the requirements presented within the CSPP.

The Contractor shall implement all necessary safety plan measures prior to commencement of any work activity. The Contractor shall conduct routine checks to assure compliance with the safety plan measures.

The Contractor is responsible to the Owner for the conduct of all subcontractors it employs on the project. The Contractor shall assure that all subcontractors are made aware of the requirements of the CSPP and SPCD and that they implement and maintain all necessary measures.

No deviation or modifications may be made to the approved CSPP and SPCD unless approved in writing by the Owner. The necessary coordination actions to review Contractor proposed modifications to an approved CSPP or approved SPCD can require a significant amount of time.

80-05 Character of workers, methods, and equipment. The Contractor shall, at all times, employ sufficient labor and equipment for prosecuting the work to full completion in the manner and time required by the contract, plans, and specifications.

All workers shall have sufficient skill and experience to perform properly the work assigned to them. Workers engaged in special work or skilled work shall have sufficient experience in such work and in the operation of the equipment required to perform the work satisfactorily.

Any person employed by the Contractor or by any subcontractor who violates any operational regulations or operational safety requirements and, in the opinion of the RPR, does not perform his work in a proper and skillful manner or is intemperate or disorderly shall, at the written request of the RPR, be removed immediately by the Contractor or subcontractor employing such person, and shall not be employed again in any portion of the work without approval of the RPR.

Should the Contractor fail to remove such person or persons, or fail to furnish suitable and sufficient personnel for the proper execution of the work, the RPR may suspend the work by written notice until compliance with such orders.

All equipment that is proposed to be used on the work shall be of sufficient size and in such mechanical condition as to meet requirements of the work and to produce a satisfactory quality of work. Equipment used on any portion of the work shall not cause injury to previously completed work, adjacent property, or existing airport facilities due to its use.

When the methods and equipment to be used by the Contractor in accomplishing the work are not prescribed in the contract, the Contractor is free to use any methods or equipment that will accomplish the work in conformity with the requirements of the contract, plans, and specifications.

When the contract specifies the use of certain methods and equipment, such methods and equipment shall be used unless otherwise authorized by the RPR. If the Contractor desires to use a method or type of equipment other than specified in the contract, the Contractor may request authority from the RPR to do so. The request shall be in writing and shall include a full description of the methods and equipment proposed and of the reasons for desiring to make the change. If approval is given, it will be on the condition that the Contractor will be fully responsible for producing work in conformity with contract requirements. If, after trial use of the substituted methods or equipment, the RPR determines that the work produced does not meet contract requirements, the Contractor shall discontinue the use of the substitute method or equipment and shall complete the remaining work with the specified methods and equipment. The Contractor shall remove any deficient work and replace it with work of specified quality, or take such other corrective action as the RPR may direct. No change will be made in basis of payment for the contract items involved nor in contract time as a result of authorizing a change in methods or equipment under this paragraph.

Any person employed by the Contractor or by a subcontractor who, in the opinion of the Engineer, does not perform his work in a proper and skillful manner or is intemperate or disorderly shall, at the written request of the Engineer, be removed forthwith by the Contractor or subcontractor employing such person, and shall not be employed again in any portion of the work without the approval of the Engineer.

Should the Contractor fail to remove such person or persons or fail to furnish suitable and sufficient personnel for the proper prosecution of the work, the Engineer may suspend the work by written notice until compliance with such orders.

The failure to provide adequate labor and equipment may be considered cause for terminating the contract.

80-06 Temporary suspension of the work. The Owner shall have the authority to suspend the work wholly, or in part, for such period or periods the Owner may deem necessary, due to unsuitable weather, or other conditions considered unfavorable for the execution of the work, or for such time necessary due to the failure on the part of the Contractor to carry out orders given or perform any or all provisions of the contract.

In the event that the Contractor is ordered by the Owner, in writing, to suspend work for some unforeseen cause not otherwise provided for in the contract and over which the Contractor has no control, the Contractor may be reimbursed for actual money expended on the work during the period of shutdown. No allowance will be made for anticipated profits. The period of shutdown shall be computed from the effective date of the written order to suspend work to the effective date of the written order to resume the work. Claims for such compensation shall be filed with the RPR within the time period stated in the RPR's order to resume work. The Contractor shall submit with their own claim information substantiating the amount shown on the claim. The RPR will forward the Contractor's claim to the Owner for consideration in accordance with local laws or ordinances. No provision of this article shall be construed as entitling the Contractor to compensation for delays due to inclement weather or for any other delay provided for in the contract, plans, or specifications.

If it becomes necessary to suspend work for an indefinite period, the Contractor shall store all materials in such manner that they will not become an obstruction nor become damaged in any way. The Contractor shall take every precaution to prevent damage or deterioration of the work performed and provide for normal drainage of the work. The Contractor shall erect temporary structures where necessary to provide for traffic on, to, or from the airport.

If the Contractor requests a suspension of the work in whole or part for such period or periods as he may need, due to unsuitable weather or such other conditions as Contractor considers unfavorable for the prosecution of the work, or if ordered by Owner or Engineer due to inclement weather or the failure on the part of the Contractor to carry out orders given, or to perform any or all provisions of the Contractor shall perform the following without additional compensations:

1. Suitably store all materials.

2.Implement measures to protect existing work from damage or deterioration.

3. Erect such temporary structures and barricades as Engineer may require to provide for traffic on, to, or from the airport and air operations area.

4. Periodically inspect and maintain the work and temporary measures during the suspension period. Repair any damage to the work during the suspension period.

5. Pay all cost of Owner associated with the suspension including but not limited to cost of Engineer, inspection and Owner's testing laboratory to perform their contractual requirements with respect to the project during the work suspension.

6. Maintain all insurance and bond coverages.

7. Perform such other work as required by the Contract Documents with respect to the Project.

80-07 Determination and extension of contract time. The number of calendar or completion date shall be stated in the proposal and contract and shall be known as the Contract Time.

If the contract time requires extension for reasons beyond the Contractor's control, it shall be adjusted as follows:

80-07.1

Contract time based on calendar days. Contract Time based on calendar days shall consist of the number of calendar days stated in the contract counting from the effective date of the Notice to Proceed and including all Saturdays, Sundays, holidays, and non-work days. All calendar days elapsing between the effective dates of the Owner's orders to suspend and resume all work, due to causes not the fault of the Contractor, shall be excluded.

At the time of final payment, the contract time shall be increased in the same proportion as the cost of the actually completed quantities bears to the cost of the originally estimated quantities in the proposal. Such increase in the contract time shall not consider either cost of work or the extension of contract time that has been covered by a change order or supplemental agreement. Charges against the contract time will cease as of the date of final acceptance.

In all cases where the Contractor is delayed, obstructed, or hindered in the execution of the work, or any part thereof, for any reason whatsoever, the Contractor shall not be entitled to claim or recover any damages or additional payment from the Owner or Engineer. However, it is the intent of this Contract that in all cases where the Contractor is substantially delayed, obstructed, or hindered in the execution of the work through no fault of the Contractor and because of conditions beyond the Contractor's control, the Engineer may recommend an extension on the contract time under Subsection 80-07 by such amount as conditions, in the judgment of the Engineer, justify, and such extension of the contract time shall be the exclusive remedy of the Contractor for delay, hindrance or obstruction occurring through no fault of the Contractor and because of conditions beyond the Contractor's control.

80-08 Failure to complete on time. For each calendar day or working day, as specified in the contract, that any work remains uncompleted after the contract time (including all extensions and adjustments as provided in paragraph 80-07, *Determination and Extension of Contract Time*) the sum specified in the contract and proposal as liquidated damages (LD) will be deducted from any money due or to become due the Contractor or their own surety. Such deducted sums shall not be deducted as a penalty but shall be considered as liquidation of a reasonable portion of damages including but not limited to additional engineering services that will be incurred by the Owner should the Contractor fail to complete the work in the time provided in their contract.

See Section 01010- Summary of Work for construction time and liquidated damages

.80-09 Default and termination of contract. The Contractor shall be considered in default of their contract and such default will be considered as cause for the Owner to terminate the contract for any of the following reasons, if the Contractor:

a. Fails to begin the work under the contract within the time specified in the Notice to Proceed, or

b. Fails to perform the work or fails to provide sufficient workers, equipment and/or materials to assure completion of work in accordance with the terms of the contract, or

c. Performs the work unsuitably or neglects or refuses to remove materials or to perform anew such work as may be rejected as unacceptable and unsuitable, or

d. Discontinues the execution of the work, or

e. Fails to resume work which has been discontinued within a reasonable time after notice to do so, or

f. Becomes insolvent or is declared bankrupt, or commits any act of bankruptcy or insolvency, or

g. Allows any final judgment to stand against the Contractor unsatisfied for a period of 10 days, or

h. Makes an assignment for the benefit of creditors, or

i. For any other cause whatsoever, fails to carry on the work in an acceptable manner.

Should the Owner consider the Contractor in default of the contract for any reason above, the Owner shall immediately give written notice to the Contractor and the Contractor's surety as to the reasons for considering the Contractor in default and the Owner's intentions to terminate the contract.

If the Contractor or surety, within a period of 10 days after such notice, does not proceed in accordance therewith, then the Owner will, upon written notification from the RPR of the facts of such delay, neglect, or default and the Contractor's failure to comply with such notice, have full power and authority without violating the contract, to take the execution of the work out of the hands of the Contractor. The Owner may appropriate or use any or all materials and equipment that have been mobilized for use in the work and are acceptable and may enter into an agreement for the completion of said contract according to the terms and provisions thereof, or use such other methods as in the opinion of the RPR will be required for the completion of said contract in an acceptable manner.

All costs and charges incurred by the Owner, together with the cost of completing the work under contract, will be deducted from any monies due or which may become due the Contractor. If such expense exceeds the sum which would have been payable under the contract, then the Contractor and the surety shall be liable and shall pay to the Owner the amount of such excess.

80-10 Termination for national emergencies. The Owner shall terminate the contract or portion thereof by written notice when the Contractor is prevented from proceeding with the construction contract as a direct result of an Executive Order of the President with respect to the execution of war or in the interest of national defense.

When the contract, or any portion thereof, is terminated before completion of all items of work in the contract, payment will be made for the actual number of units or items of work completed at the contract price or as mutually agreed for items of work partially completed or not started. No claims or loss of anticipated profits shall be considered.

Reimbursement for organization of the work, and other overhead expenses, (when not otherwise included in the contract) and moving equipment and materials to and from the job will be considered, the intent being that an equitable settlement will be made with the Contractor.

Acceptable materials, obtained or ordered by the Contractor for the work and that are not incorporated in the work shall, at the option of the Contractor, be purchased from the Contractor at actual cost as shown by receipted bills and actual cost records at such points of delivery as may be designated by the RPR.

Termination of the contract or a portion thereof shall neither relieve the Contractor of their responsibilities for the completed work nor shall it relieve their surety of its obligation for and concerning any just claim arising out of the work performed.

The Engineer and the Owner shall be given full access to all books, cost records, correspondence and papers of the Contractor relating to the contract in order to determine amounts to be paid the Contractor due to any termination of the contract.

80-11 Work area, storage area and sequence of operations. The Contractor shall obtain approval from the RPR prior to beginning any work in all areas of the airport. No operating runway, taxiway, or air operations area (AOA) shall be crossed, entered, or obstructed while it is operational. The Contractor shall plan and coordinate work in accordance with the approved CSPP and SPCD.

END OF SECTION 80

Section 90

Measurement and Payment

90-01 Measurement of quantities. All work completed under the contract will be measured by the RPR, or their authorized representatives, using United States Customary Units of Measurement.

The method of measurement and computations to be used in determination of quantities of material furnished and of work performed under the contract will be those methods generally recognized as conforming to good engineering practice.

Unless otherwise specified, longitudinal measurements for area computations will be made horizontally, and no deductions will be made for individual fixtures (or leave-outs) having an area of 9 square feet or less. Unless otherwise specified, transverse measurements for area computations will be the neat dimensions shown on the plans or ordered in writing by the RPR.

Unless otherwise specified, all contract items which are measured by the linear foot such as electrical ducts, conduits, pipe culverts, underdrains, and similar items shall be measured parallel to the base or foundation upon which such items are placed.

The term "lump sum" when used as an item of payment will mean complete payment for the work described in the contract. When a complete structure or structural unit (in effect, "lump sum" work) is specified as the unit of measurement, the unit will be construed to include all necessary fittings and accessories.

When requested by the Contractor and approved by the RPR in writing, material specified to be measured by the cubic yard may be weighed, and such weights will be converted to cubic yards for payment purposes. Factors for conversion from weight measurement to volume measurement will be determined by the RPR and shall be agreed to by the Contractor before such method of measurement of pay quantities is used.

Measurement and Payment Terms

Term	Description
Excavation and Embankment Volume	In computing volumes of excavation, the average end area method will be used unless otherwise specified.
Measurement and Proportion by Weight	The term "ton" will mean the short ton consisting of 2,000 pounds avoirdupois. All materials that are measured or proportioned by weights shall be weighed on accurate, independently certified scales by competent, qualified personnel at locations designated by the RPR. If material is shipped by rail, the car weight may be accepted provided that only the actual weight of material is paid for. However, car weights will not be acceptable for material to be passed through mixing plants. Trucks used to haul material being paid for by weight shall be weighed empty daily at such times as the RPR directs, and each truck shall bear a plainly legible identification mark.
Measurement by Volume	Materials to be measured by volume in the hauling vehicle shall be hauled in approved vehicles and measured therein at the point of delivery. Vehicles for this purpose may be of any size or type acceptable for the materials hauled, provided that the body is of such shape that the actual contents may be readily and accurately determined. All vehicles shall be loaded to at least their water level capacity, and all loads shall be leveled when the vehicles arrive at the point of delivery.

Term	Description
Asphalt Material	Asphalt materials will be measured by the gallon or ton. When measured by volume, such volumes will be measured at 60°F or will be corrected to the volume at 60°F using ASTM D1250 for asphalts. Net certified scale weights or weights based on certified volumes in the case of rail shipments will be used as a basis of measurement, subject to correction when asphalt material has been lost from the car or the distributor, wasted, or otherwise not incorporated in the work. When asphalt materials are shipped by truck or transport, net certified weights by volume, subject to correction for loss or foaming, will be used for computing quantities.
Cement	Cement will be measured by the ton or hundredweight.
Structure	Structures will be measured according to neat lines shown on the plans or as altered to fit field conditions.
Timber	Timber will be measured by the thousand feet board measure (MFBM) actually incorporated in the structure. Measurement will be based on nominal widths and thicknesses and the extreme length of each piece.
Plates and Sheets	The thickness of plates and galvanized sheet used in the manufacture of corrugated metal pipe, metal plate pipe culverts and arches, and metal cribbing will be specified and measured in decimal fraction of inch.
Miscellaneous Items	When standard manufactured items are specified such as fence, wire, plates, rolled shapes, pipe conduit, etc., and these items are identified by gauge, unit weight, section dimensions, etc., such identification will be considered to be nominal weights or dimensions. Unless more stringently controlled by tolerances in cited specifications, manufacturing tolerances established by the industries involved will be accepted.
Scales	Scales must be tested for accuracy and serviced before use. Scales for weighing materials which are required to be proportioned or measured and paid for by weight shall be furnished, erected, and maintained by the Contractor, or be certified permanently installed commercial scales. Platform scales shall be installed and maintained with the platform level and rigid bulkheads at each end. Scales shall be accurate within 0.5% of the correct weight throughout the range of use. The Contractor shall have the scales checked under the observation of the RPR before beginning work and at such other times as requested. The intervals shall be uniform in spacing throughout the graduated or marked length of the beam or dial and shall not exceed 0.1% of the nominal rated capacity of the scale, but not less than one pound. The use of spring balances will not be permitted. In the event inspection reveals the scales have been “overweighing” (indicating more than correct weight) they will be immediately adjusted. All materials received subsequent to the last previous correct weighting-accuracy test will be reduced by the percentage of error in excess of 0.5%. In the event inspection reveals the scales have been under-weighing (indicating less than correct weight), they shall be immediately adjusted. No additional payment to the Contractor will be allowed for materials previously weighed and recorded. Beams, dials, platforms, and other scale equipment shall be so arranged that the operator and the RPR can safely and conveniently view them. Scale installations shall have available ten standard 50-pound weights for testing the weighing equipment or suitable weights and devices for other approved equipment.

Term	Description
	All costs in connection with furnishing, installing, certifying, testing, and maintaining scales; for furnishing check weights and scale house; and for all other items specified in this subsection, for the weighing of materials for proportioning or payment, shall be included in the unit contract prices for the various items of the project.
Rental Equipment	Rental of equipment will be measured by time in hours of actual working time and necessary traveling time of the equipment within the limits of the work. Special equipment ordered in connection with extra work will be measured as agreed in the change order or supplemental agreement authorizing such work as provided in paragraph 90-05 *Payment for Extra Work*.
Pay Quantities	When the estimated quantities for a specific portion of the work are designated as the pay quantities in the contract, they shall be the final quantities for which payment for such specific portion of the work will be made, unless the dimensions of said portions of the work shown on the plans are revised by the RPR. If revised dimensions result in an increase or decrease in the quantities of such work, the final quantities for payment will be revised in the amount represented by the authorized changes in the dimensions.

90-02 Scope of payment. The Contractor shall receive and accept compensation provided for in the contract as full payment for furnishing all materials, for performing all work under the contract in a complete and acceptable manner, and for all risk, loss, damage, or expense of whatever character arising out of the nature of the work or the execution thereof, subject to the provisions of Section 70, paragraph 70-18, *No Waiver of Legal Rights*.

When the "basis of payment" subsection of a technical specification requires that the contract price (price bid) include compensation for certain work or material essential to the item, this same work or material will not also be measured for payment under any other contract item which may appear elsewhere in the contract, plans, or specifications.

90-03 Compensation for altered quantities. When the accepted quantities of work vary from the quantities in the proposal, the Contractor shall accept as payment in full, so far as contract items are concerned, payment at the original contract price for the accepted quantities of work actually completed and accepted. No allowance, except as provided for in Section 40, paragraph 40-02, *Alteration of Work and Quantities*, will be made for any increased expense, loss of expected reimbursement, or loss of anticipated profits suffered or claimed by the Contractor which results directly from such alterations or indirectly from their own unbalanced allocation of overhead and profit among the contract items, or from any other cause.

90-04 Payment for omitted items. As specified in Section 40, paragraph 40-03, *Omitted Items*, the RPR shall have the right to omit from the work (order nonperformance) any contract item, except major contract items, in the best interest of the Owner.

Should the RPR omit or order nonperformance of a contract item or portion of such item from the work, the Contractor shall accept payment in full at the contract prices for any work actually completed and acceptable prior to the RPR's order to omit or non-perform such contract item.

Acceptable materials ordered by the Contractor or delivered on the work prior to the date of the RPR's order will be paid for at the actual cost to the Contractor and shall thereupon become the property of the Owner.

In addition to the reimbursement hereinbefore provided, the Contractor shall be reimbursed for all actual costs incurred for the purpose of performing the omitted contract item prior to the date of the RPR's order. Such additional costs incurred by the Contractor must be directly related to the deleted contract

item and shall be supported by certified statements by the Contractor as to the nature the amount of such costs.

90-05 Payment for extra work.

Extra work, performed in accordance with subsection 40-04 EXTRA WORK, will be paid for at the contract prices or agreed prices specified in the change order or supplemental agreement authorizing the extra work. When the change order or supplemental agreement authorizing the extra work requires that it be done by force account, such force account shall be measured and paid for as follows (THE FOLLOWING PAYMENT PROVISIONS APPLY ONLY WHERE THE NATURE OF THE EXTRA WORK IS SUCH THAT IT CANNOT BE MEASURED AND PAID FOR ACCORDING TO THE CONTRACT UNIT PRICES) :

a. Labor. For all labor (skilled and unskilled) and foremen in direct charge of a specific force account item, the Contractor shall receive the rate of wage (or scale) for every hour that such labor or foreman is actually engaged in the specified force account work. Such wage (or scale) shall be agreed upon in writing before the beginning of the work.

The Contractor shall receive the actual costs paid to, or in behalf of, workers by reason of subsistence and travel allowances, health and welfare benefits, pension fund benefits or other benefits, when such amounts are required by collective bargaining agreement or other employment contract generally applicable to the classes of labor employed on the work.

An amount equal to 15 percent of the sum of the above items will also be paid to the Contractor.

b. Insurance and Taxes. For property damage, liability, and workmen's compensation insurance premiums, unemployment insurance contributions, and social security taxes on the force account work the Contractor shall receive the actual cost, to which cost (sum) 5 percent will be added. The Contractor shall furnish satisfactory evidence of the rate or rates paid for such insurance an taxes.

c. Materials. For materials accepted by the Engineer and then used, the Contractor shall receive the actual cost of such material delivered on the work, including transportation charges paid by him (exclusive of machinery rentals as hereinafter set forth), to which cost (sum) 15 percent will be added.

d. Equipment. For any machinery or special equipment (other than small tools) including fuel and lubricants, plus transportation costs, the use of which has been authorized by the Engineer, the Contractor shall receive the rental rates agreed upon in writing before such work is begun for the actual time that such equipment is committed to the work, to which rental sum 15 percent will be added.

e. Miscellaneous. No additional allowance will be made for general superintendence, the use of small tools, or other costs for which no specific allowance is herein provided.

f. Comparison of Record. The Contractor and the Engineer shall compare records of the cost of force account work at the end of each day. Agreement shall be indicated by signature of the Contractor and the Engineer or their duly authorized representatives.

g. Statement. No payment will be made for work performed on a force account basis until the Contractor has furnished the Engineer with duplicate itemized statements of the cost of such force account work detailed as follows:

(1) Name, classification, date, daily hours, total hours, rate and extension for each laborer and foreman.

(2) Designation, dates, daily hours, total hours, rental rate, and extension for each unit of machinery and equipment

(3) Quantities of materials.

(4) Transportation of materials.

(5) Cost of property damage, liability and workman's compensation insurance premiums, unemployment insurance contributions, and social security tax.

Statements shall be accomplished and supported by a receipted invoice for all materials used and transportation charges. However, if material used on the force account work are not specifically purchased for such work but are taken from the Contractor's stock, then in lieu of the invoices the Contractor shall furnish an affidavit certifying that such materials were taken from his/her stock, that the quantity claimed was actually used, and that the price and transportation claimed represent the actual cost to the Contractor.

The additional payment, based on the percentages specified above, shall constitute full compensation for all items of expense not specifically provided for the force account work. The total payment made as provided above shall constitute full compensation for such work.

90-06 Partial payments. Partial payments will be made to the Contractor at least once each month as the work progresses. Said payments will be based upon estimates, prepared by the RPR, of the value of the work performed and materials complete and in place, in accordance with the contract, plans, and specifications. Such partial payments may also include the delivered actual cost of those materials stockpiled and stored in accordance with paragraph 90-07, *Payment for Materials on Hand*. No partial payment will be made when the amount due to the Contractor since the last estimate amounts to less than five hundred dollars.

From the total of the amount determined to be payable on a partial payment, **10** percent of such total amount will be deducted and retained by the Owner for protection of the Owner's interests. Unless otherwise instructed by the Owner, the amount retained by the Owner will be in effect until the final payment is made except as follows:

(1) Contractor may request release of retainage on work that has been partially accepted by the Owner in accordance with Section 50-03. Contractor must provide a certified invoice to the RPR that supports the value of retainage held by the Owner for partially accepted work.

(2) In lieu of retainage, the Contractor may exercise at its option the establishment of an escrow account per paragraph 90-08.

b. The Contractor is required to pay all subcontractors for satisfactory performance of their contracts no later than 30 days after the Contractor has received a partial payment. Contractor must provide the Owner evidence of prompt and full payment of retainage held by the prime Contractor to the subcontractor within 30 days after the subcontractor's work is satisfactorily completed. A subcontractor's work is satisfactorily completed when all the tasks called for in the subcontract have been

accomplished and documented as required by the Owner. When the Owner has made an incremental acceptance of a portion of a prime contract, the work of a subcontractor covered by that acceptance is deemed to be satisfactorily completed.

c. When at least 95% of the work has been completed to the satisfaction of the RPR, the RPR shall, at the Owner's discretion and with the consent of the surety, prepare estimates of both the contract value and the cost of the remaining work to be done. The Owner may retain an amount not less than twice the contract value or estimated cost, whichever is greater, of the work remaining to be done. The remainder, less all previous payments and deductions, will then be certified for payment to the Contractor.

It is understood and agreed that the Contractor shall not be entitled to demand or receive partial payment based on quantities of work in excess of those provided in the proposal or covered by approved change orders or supplemental agreements, except when such excess quantities have been determined by the RPR to be a part of the final quantity for the item of work in question.

No partial payment shall bind the Owner to the acceptance of any materials or work in place as to quality or quantity. All partial payments are subject to correction at the time of final payment as provided in paragraph 90-09, *Acceptance and Final Payment*.

The Contractor shall deliver to the Owner a complete release of all claims for labor and material arising out of this contract before the final payment is made. If any subcontractor or supplier fails to furnish such a release in full, the Contractor may furnish a bond or other collateral satisfactory to the Owner to indemnify the Owner against any potential lien or other such claim. The bond or collateral shall include all costs, expenses, and attorney fees the Owner may be compelled to pay in discharging any such lien or claim.

90-07 Payment for materials on hand. Partial payments may be made to the extent of the delivered cost of materials to be incorporated in the work, provided that such materials meet the requirements of the contract, plans, and specifications and are delivered to acceptable sites on the airport property or at other sites in the vicinity that are acceptable to the Owner. Such delivered costs of stored or stockpiled materials may be included in the next partial payment after the following conditions are met:

a. The material has been stored or stockpiled in a manner acceptable to the RPR at or on an approved site.

b. The Contractor has furnished the RPR with acceptable evidence of the quantity and quality of such stored or stockpiled materials.

c. The Contractor has furnished the RPR with satisfactory evidence that the material and transportation costs have been paid.

d. The Contractor has furnished the Owner legal title (free of liens or encumbrances of any kind) to the material stored or stockpiled.

e. The Contractor has furnished the Owner evidence that the material stored or stockpiled is insured against loss by damage to or disappearance of such materials at any time prior to use in the work.

It is understood and agreed that the transfer of title and the Owner's payment for such stored or stockpiled materials shall in no way relieve the Contractor of their responsibility for furnishing and placing such materials in accordance with the requirements of the contract, plans, and specifications.

In no case will the amount of partial payments for materials on hand exceed the contract price for such materials or the contract price for the contract item in which the material is intended to be used.

No partial payment will be made for stored or stockpiled living or perishable plant materials.

The Contractor shall bear all costs associated with the partial payment of stored or stockpiled materials in accordance with the provisions of this paragraph.

90-08 Payment of withheld funds. At the Contractor's option, if an Owner withholds retainage in accordance with the methods described in paragraph 90-06 *Partial Payments*, the Contractor may request that the Owner deposit the retainage into an escrow account. The Owner's deposit of retainage into an escrow account is subject to the following conditions:

a. The Contractor shall bear all expenses of establishing and maintaining an escrow account and escrow agreement acceptable to the Owner.

b. The Contractor shall deposit to and maintain in such escrow only those securities or bank certificates of deposit as are acceptable to the Owner and having a value not less than the retainage that would otherwise be withheld from partial payment.

c. The Contractor shall enter into an escrow agreement satisfactory to the Owner.

d. The Contractor shall obtain the written consent of the surety to such agreement.

90-09 Acceptance and final payment. When the contract work has been accepted in accordance with the requirements of Section 50, paragraph 50-15, *Final Acceptance*, the RPR will prepare the final estimate of the items of work actually performed. The Contractor shall approve the RPR's final estimate or advise the RPR of the Contractor's objections to the final estimate which are based on disputes in measurements or computations of the final quantities to be paid under the contract as amended by change order or supplemental agreement. The Contractor and the RPR shall resolve all disputes (if any) in the measurement and computation of final quantities to be paid within 30 calendar days of the Contractor's receipt of the RPR's final estimate. If, after such 30-day period, a dispute still exists, the Contractor may approve the RPR's estimate under protest of the quantities in dispute, and such disputed quantities shall be considered by the Owner as a claim in accordance with Section 50, paragraph 50-16, *Claims for Adjustment and Disputes*.

After the Contractor has approved, or approved under protest, the RPR's final estimate, and after the RPR's receipt of the project closeout documentation required in paragraph 90-11, *Contractor Final Project Documentation*, final payment will be processed based on the entire sum, or the undisputed sum in case of approval under protest, determined to be due the Contractor less all previous payments and all amounts to be deducted under the provisions of the contract. All prior partial estimates and payments shall be subject to correction in the final estimate and payment.

If the Contractor has filed a claim for additional compensation under the provisions of Section 50, paragraph 50-16, *Claims for Adjustments and Disputes,* or under the provisions of this paragraph, such claims will be considered by the Owner in accordance with local laws or ordinances. Upon final adjudication of such claims, any additional payment determined to be due the Contractor will be paid pursuant to a supplemental final estimate.

90-10 Construction warranty.

a. In addition to any other warranties in this contract, the Contractor warrants that work performed under this contract conforms to the contract requirements and is free of any defect in equipment, material, workmanship, or design furnished, or performed by the Contractor or any subcontractor or supplier at any tier.

b. This warranty shall continue for a period of one year from the date of final acceptance of the work, except as noted. If the Owner takes possession of any part of the work before final acceptance, this warranty shall continue for a period of one year from the date the Owner takes possession. **However, this will not relieve the Contractor from corrective items required by the final acceptance of the project**

work. Light Emitting Diode emitting diode (LED) light fixtures with the exception of obstruction lighting, must be warranted by the manufacturer for a minimum of four (4) years after date of installation inclusive of all electronics.

c. The Contractor shall remedy at the Contractor's expense any failure to conform, or any defect. In addition, the Contractor shall remedy at the Contractor's expense any damage to Owner real or personal property, when that damage is the result of the Contractor's failure to conform to contract requirements; or any defect of equipment, material, workmanship, or design furnished by the Contractor.

d. The Contractor shall restore any work damaged in fulfilling the terms and conditions of this clause. The Contractor's warranty with respect to work repaired or replaced will run for one year from the date of repair or replacement.

e. The Owner will notify the Contractor, in writing, within **seven (7)** days after the discovery of any failure, defect, or damage.

f. If the Contractor fails to remedy any failure, defect, or damage within **14** days after receipt of notice, the Owner shall have the right to replace, repair, or otherwise remedy the failure, defect, or damage at the Contractor's expense.

g. With respect to all warranties, express or implied, from subcontractors, manufacturers, or suppliers for work performed and materials furnished under this contract, the Contractor shall: (1) Obtain all warranties that would be given in normal commercial practice; (2) Require all warranties to be executed, in writing, for the benefit of the Owner, as directed by the Owner, and (3) Enforce all warranties for the benefit of the Owner.

h. This warranty shall not limit the Owner's rights with respect to latent defects, gross mistakes, or fraud.

90-11 Contractor Final Project Documentation. Approval of final payment to the Contractor is contingent upon completion and submittal of the items listed below. The final payment will not be approved until the RPR approves the Contractor's final submittal. The Contractor shall:

a. Provide two (2) copies of all manufacturers warranties specified for materials, equipment, and installations.

b. Provide weekly payroll records (not previously received) from the general Contractor and all subcontractors.

c. Complete final cleanup in accordance with Section 40, paragraph 40-08, *Final Cleanup*.

d. Complete all punch list items identified during the Final Inspection.

e. Provide complete release of all claims for labor and material arising out of the Contract.

f. Provide a certified statement signed by the subcontractors, indicating actual amounts paid to the Disadvantaged Business Enterprise (DBE) subcontractors and/or suppliers associated with the project.

g. When applicable per state requirements, return copies of sales tax completion forms.

h. Manufacturer's certifications for all items incorporated in the work.

i. All required record drawings, as-built drawings or as-constructed drawings.

j. Project Operation and Maintenance (O&M) Manual(s).

k. Security for Construction Warranty.

l. Equipment commissioning documentation submitted, if required.

90-12 LIENS. Neither the final payment nor any part of the retained percentage shall become due until the Contractor delivers to the Owner: (a) an affidavit stating, if that be in fact, that all subcontractors and suppliers have been paid in full, or if the fact be otherwise, showing the name of each subcontractor and supplier who has not been paid in full and the amount due or to become due each for labor, service or material furnished; (b) consent of surety, if any, to final payment; and (c) if required by Owner, other data establishing payment for satisfaction of all obligations, such as receipt, releases, and waivers of lien arising out of the Contract to the extent and in such form as designated by the Owner

END OF SECTION 90

Section 100

FAA
Airports

Contract Provision Guidelines for Obligated Sponsors and Airport Improvement Program Projects

Issued on June 19, 2018

Contents

Record of Changes GP-100-2

Contract Guidance GP-100-4

1. Purpose of this Document GP-100-4
2. Sponsor Requirements GP-100-4
3. Typical Procurement Steps GP-100-5
4. Applicability Matrix for Contract Provisions GP-100-6

Appendix A – CONTRACT PROVISIONS GP-100-9

A1 ACCESS TO RECORDS AND REPORTS GP-100-9
A2 AFFIRMATIVE ACTION REQUIREMENT GP-100-10
A3 BREACH OF CONTRACT TERMS GP-100-12
A4 BUY AMERICAN PREFERENCE GP-100-13
A5 CIVIL RIGHTS - GENERAL GP-100-17
A6 CIVIL RIGHTS – TITLE VI ASSURANCE GP-100-19
A7 CLEAN AIR AND WATER POLLUTION CONTROL GP-100-27
A8 CONTRACT WORKHOURS AND SAFETY STANDARDS ACT REQUIREMENTS GP-100-28
A9 COPELAND “ANTI-KICKBACK” ACT GP-100-30
A10 DAVIS-BACON REQUIREMENTS GP-100-32
A11 DEBARMENT AND SUSPENSION GP-100-39
A12 DISADVANTAGED BUSINESS ENTERPRISE GP-100-41
A13 DISTRACTED DRIVING GP-100-44
A14 ENERGY CONSERVATION REQUIREMENTS GP-100-45

A15 DRUG FREE WORKPLACE REQUIREMENTS GP-100-46
A16 EQUAL EMPLOYEMENT OPPORTUNITY (EEO) GP-100-47
A17 FEDERAL FAIR LABOR STANDARDS ACT (FEDERAL MINIMUM WAGE) GP-100-54
A18 LOBBYING AND INFLUENCING FEDERAL EMPLOYEES GP-100-55
A19 PROHIBITION of SEGREGATED FACILITIES GP-100-57
A20 OCCUPATIONAL SAFETY AND HEALTH ACT OF 1970 ..... GP-100-59
A21 PROCUREMENT OF RECOVERED MATERIALS GP-100-60
A22 RIGHT TO INVENTIONS (OMITTED) GP-100-62
A23 SEISMIC SAFETY (OMITTED) GP-100-63
A24 TAX DELINQUENCY AND FELONY CONVICTIONS GP-100-64
A25 TERMINATION OF CONTRACT GP-100-66
A26 TRADE RESTRICTION CERTIFICATION GP-100-70
A27 VETERAN'S PREFERENCE GP-100-72
A28 DAVIS-BACON WAGE DECISION GP-100-73

RECORD OF CHANGES

No.	Date	Item	Change
1	1/29/2016	Entire Document	Re-structured document to enhance user understanding of use and applicability; added suggested provisions for "Termination for Cause", "Recovered Materials", "Seismic Safety".
2	6/10/2016	Table 1	Distracted Driving: Updated "Dollar Threshold" to $3,500 to reflect current micro-purchase threshold.
3	6/10/2016	A2, Affirmative Action	Update the reference to the Department of Labor online document to be "Participation Goals for Minority and Females"
4	6/10/2016	A12, Disadvantaged Business Enterprise	A12.3: Changed Title to "Required Provisions" A12.3.1: Corrected starting timeframe for submitting written confirmation from "Owner Notice of Award" to "bid opening" A12.3.1: Provided two sets of last paragraphs to reflect change (7 days to 5 days) that occurs on December 31, 2016. A12.3.2: Moved Race/Gender Neutral language up and renamed heading to reflect text is solicitation language. A12.3.3: Moved and renamed contract clause information and clarified it is for prime contract covered by a DBE program.
5	12/12/2017	Cover	Change title of document for clarity

No.	Date	Item	Change
6	12/12/2017	1. Purpose of this Document	Added clarifying text addressing purpose and limitations of this guidance. 1.7-1.9: Added definitions of contract, applicant, bid
7	12/12/2017	2. Sponsor requirements	Added clarifying text addressing sponsor responsibilities.
8	12/12/2017	3. Typical Procurement Steps	Added clarifying text for typical procurement process steps.
9	12/12/2017	Table 1 – Applicability Matrix	Re-arranged table in alphabetic order. Added "Solicitation" column to address solicitation provisions Item l, Seismic Safety: Added Limited Application Added note on Airport Concessions Disadvantaged Business Enterprises
10	12/12/2017	All Clauses	Clarifying revisions made to applicability section.
11	12/12/2017	A5, Civil Rights - General	Rephrased General Civil Rights Provision to simplify language and to clarify duration of obligation for tenant/concessionaire/lessee
12	12/12/2017	A6.3.1 Civil Rights – Solicitations	Added sponsor must select either DBE or ACDBE
12	12/12/2017	A12, Disadvantaged Business Enterprise	The deadline to submit DBE confirmation of participation is now 5 days after bid opening or as a matter of bid responsiveness. Updated DBE contract assurance (12.3.3) to match language of 49 CFR § 26.13
13	12/12/2017	A24, Tax Delinquency and Felony Conviction	New certification addressing contractor tax delinquency and felony conviction.
14	6/19/2018	6.2.1, Applicability of Title VI Solicitation Notice	For Title VI Clauses for Compliance with Nondiscrimination Requirements, change second sentence in second column to changed "are already subject to nondiscrimination requirements" to "are **not** already subject to nondiscrimination requirements".
15	6/19/2018	A6.4.1, Title VI Clauses for Compliance with Nondiscrimination Requirements	In second item, changed "are already subject to nondiscrimination requirements" to "are **not** already subject to nondiscrimination requirements".

CONTRACT GUIDANCE

1. Purpose of this Document

1) The purpose of this document is to establish a convenient resource for Sponsors that consolidates all possible provisions and clauses into one document that includes an applicability matrix. This document itself does not create, revise or delete requirements for participation in the Airport Improvement Program. The source of requirements addressed within this document are identified within the section for each individual clause.

2) Federal laws and regulations require that a sponsor (a recipient of federal assistance) include specific clauses in certain contracts, solicitations, or specifications regardless of whether or not the project is federally funded.

3) The term **sponsor** is used in this document to mean either an obligated sponsor on a project that is not federally funded, or a sponsor on an AIP funded project.

4) The term ***Owner*** is generally used in the solicitation or contract clauses because of its common use in public contracts.

5) An Owner becomes an obligated sponsor upon acceptance of the Airport Improvement Program (AIP) grant assurances associated with current or prior AIP grant funded projects.

6) For purposes of determining requirements for contract provisions, the term ***contract*** includes subcontracts and supplier contracts such as purchase orders.

7) For purpose of remaining compliant with its obligations, a sponsor must incorporate applicable contract provisions in all its procurements and contract documents. Unless otherwise stated, these provisions flow down to subcontracts and sub-tier agreements.

8) The term **contractor** is understood to mean a contractor, subcontractor, or consultant; and means one who participates, through a contract or subcontract (at any tier).

9) The term **bid** is understood to mean a bid, an offer, or a proposal.

10) **Applicant:**

    a. For the Equal Employment Opportunity (EEO) clause, the term **applicant** means an applicant for employment (whether or not the phrase, *for employment*, follows the word applicant or applicants).

    b. For all other clauses, the term **applicant** means a bidder, offeror, or proposer for a contract.

2. Sponsor Requirements

In general, the sponsor must take the following actions in order to remain consistent with its obligations:

1) Include in its procurements the provisions that are applicable to its project.

2) Not incorporate the entire contract provisions guidelines in its solicitation or contract documents, whether by reference or by inclusion in whole. Incorporation of this entire guidance

document creates potential for ambiguous interpretation and may lead to improper application that unnecessarily increases price. A sponsor that fails to properly incorporate applicable contract clauses may place themselves at risk for audit findings or denial of Federal funding.

3) Incorporate applicable contract provisions using mandatory language as required. The subheading entitled *Applicability* advises whether a particular clause or provision has mandatory language that a sponsor must use.

   (a) Mandatory Language - Whenever a clause or provision has mandatory text, the sponsor must incorporate the text of the provision **without change**, except where specific adaptive input is necessary (e.g. such as the sponsor's name).

   (b) No Mandatory Language Provided - For provisions without mandatory language, this guidance provides model language acceptable to the FAA. Some sponsors may already have standard procurement language that is equivalent to those federal provisions. In these cases, sponsors may use their existing standard procurement provision language provided the text meets the intent and purpose of the Federal law or regulation.

4) Require the contractor (including all subcontractors) to insert these contract provisions in each lower tier contract (e.g. subcontract or sub-agreement).

5) Require the contractor (including all subcontractors) to incorporate the applicable requirements of these contract provisions by reference for work done under any purchase orders, rental agreements and other agreements for supplies or services.

6) Require that the prime contractor be responsible for compliance with these contract provisions by any subcontractor, lower-tier subcontractor or service provider.

7) Verify that any required local or State provision does not conflict with or alter a Federal law or regulation.

3. Typical Procurement Steps

The usual procurement steps in a project are:

1) Solicitation, Request for Bids or Request for Proposals – This is also called the Advertisement or Notice to Bidders.

2) Bidding or Accepting Proposals – In this stage, the bidders receive a complete set of the procurement documents, also known as the project manual. The project manual will typically include a copy of the solicitation, instructions-to-bidders, bid forms, certifications and representations, general provisions, contract conditions, copy of contract, project drawings, technical specifications and related project documents.

3) Bid/Proposal Evaluation – Period when Sponsor tabulates and reviews all proposals for bid responsiveness and bidder responsibility.

4) Award – Point when the Sponsor formally awards the contract to the successful bidder.

5) Execution of Contract – Point at which the Sponsor formally enters into a legally binding agreement to perform services or provide goods.

4. Applicability Matrix for Contract Provisions

Table 1 summarizes the applicability of contract provisions based upon the type of contract or agreement. The dollar threshold represents the value at which, when equal to or exceeded, the sponsor must incorporate the provision in the contract or agreement.

Supplemental information addressing applicability and use for each provision is located in Appendix A. Appendix A and the Matrix include notes indicating when the sponsor may incorporate references in the **solicitation** in lieu of including the entire text.

Meaning of cell values

- Info –Sponsor has discretion on whether to include clause in its contracts.
- Limited – Provision with limited applicability depending on circumstances of the procurement.
- n/a – Provision that is not applicable for that procurement type.
- NIS – Provision that does not need to be included or referenced in the solicitation document
- REF – Provision to be incorporated into the solicitation by reference.
- REQD - Provision the sponsor must incorporate into procurement documents.
- All provisions in Table 1 are incorporated into this contract.

Table 1 – Applicability of Provisions

Provisions/Clauses	Dollar Threshold	Solicitation	Professional Services	Construction	Equipment	Property (Land)	Non-AIP Contracts
Access to Records and Reports	$ 0	NIS	**REQD**	**REQD**	**REQD**	**REQD**	n/a
Affirmative Action Requirement	$10,000	**REQD**	Limited	**REQD**	Limited	Limited	n/a
Breach of Contract	$150,000	NIS	**REQD**	**REQD**	**REQD**	**REQD**	n/a
Buy American Preferences	$ 0	**REF**	Limited	**REQD**	**REQD**	Limited	n/a
(1) Buy American Statement	$ 0	NIS	Limited	**REQD**	**REQD**	Limited	n/a
(3) B.A. – Manufactured Product	$ 0	NIS	Limited	**REQD**	**REQD**	Limited	n/a
Civil Rights – General	$ 0	NIS	**REQD**	**REQD**	**REQD**	**REQD**	**REQD**
Civil Rights - Title VI Assurances	$ 0	**REF**	**REQD**	**REQD**	**REQD**	**REQD**	**REQD**
(1) Notice - Solicitation	$ 0	**REQD**	**REQD**	**REQD**	**REQD**	**REQD**	**REQD**
(2) Clause - Contracts	$ 0	NIS	**REQD**	**REQD**	**REQD**	**REQD**	**REQD**
(3) List – Pertinent Authorities	$0	NIS	**REQD**	**REQD**	**REQD**	**REQD**	**REQD**
Clean Air/Water Pollution Control	$150,000	NIS	**REQD**	**REQD**	**REQD**	**REQD**	n/a
Contract Work Hours and Safety Standards	$100,000	NIS	Limited	**REQD**	Limited	Limited	n/a
Copeland Anti-Kickback	$ 2,000	NIS	Limited	**REQD**	Limited	Limited	n/a
Davis Bacon Requirements	$ 2,000	**REF**	Limited	**REQD**	Limited	Limited	n/a
Debarment and Suspension	$25,000	**REF**	**REQD**	**REQD**	**REQD**	Limited	n/a
Disadvantaged Business Enterprise	$ 0	**REF**	**REQD**	**REQD**	**REQD**	**REQD**	n/a
Distracted Driving	$3,500	NIS	**REQD**	**REQD**	**REQD**	**REQD**	n/a
Energy Conservation Requirements	$ 0	NIS	**REQD**	**REQD**	**REQD**	**REQD**	n/a
Equal Employment Opportunity	$10,000	NIS	Limited	**REQD**	Limited	Limited	n/a
(1) EEO Contract Clause	$10,000	NIS	Limited	**REQD**	Limited	Limited	n/a
(2) EEO Specification	$10,000	NIS	Limited	**REQD**	Limited	Limited	n/a
Federal Fair Labor Standards Act	$ 0	NIS	**REQD**	**REQD**	**REQD**	**REQD**	Info
Foreign Trade Restriction	$ 0	**REF**	**REQD**	**REQD**	**REQD**	**REQD**	n/a
Lobbying Federal Employees	$ 100,000	**REF**	**REQD**	**REQD**	**REQD**	**REQD**	n/a
Occupational Safety and Health Act	$ 0	NIS	**REQD**	**REQD**	**REQD**	**REQD**	Info
Prohibition of Segregated Facilities	$10,000	NIS	Limited	**REQD**	Limited	Limited	n/a
Recovered Materials	$10,000	**REF**	Limited	**REQD**	**REQD**	Limited	n/a
Tax Delinquency and Felony Conviction	$ 0	NIS	**REQD**	**REQD**	**REQD**	**REQD**	n/a
Termination of Contract	$10,000	NIS	**REQD**	**REQD**	**REQD**	**REQD**	n/a
Veteran's Preference	$ 0	NIS	**REQD**	**REQD**	**REQD**	**REQD**	n/a

Airport Concessions Disadvantage Business Enterprise (ACDBE) Notes:

1. Language relative to solicitation for ACDBEs does not need to be included in AIP funded solicitations, since in no case are concessions activities funded with federal funds.

2. Airport sponsors must include the appropriate Title VI language in their solicitation notices when they seek proposals for concessions.

APPENDIX A – CONTRACT PROVISIONS

A1 ACCESS TO RECORDS AND REPORTS

A1.1 SOURCE

2 CFR § 200.333

2 CFR § 200.336

FAA Order 5100.38

A1.2 APPLICABILITY

2 CFR § 200.333 requires a sponsor to retain records pertinent to a Federal award for a period of three years from submission of final closure documents. 2 CFR § 200.336 establishes that sponsors must provide Federal entities the right to access records pertinent to the Federal award. FAA policy extends these requirements to the sponsor's contracts and subcontracts of AIP funded projects.

Contract Types – The sponsor must include this provision in all contracts and subcontracts of AIP funded projects.

Use of Provision – No mandatory language provided. The following language is acceptable to the FAA with meeting the intent of this requirement. If the sponsor prefers to use different language, the sponsor's language must fully satisfy the requirements of §§ 200.333 and 200.336.

A1.3 CONTRACT CLAUSE

ACCESS TO RECORDS AND REPORTS

The Contractor must maintain an acceptable cost accounting system. The Contractor agrees to provide the Owner, the Federal Aviation Administration and the Comptroller General of the United States or any of their duly authorized representatives access to any books, documents, papers and records of the Contractor which are directly pertinent to the specific contract for the purpose of making audit, examination, excerpts and transcriptions. The Contractor agrees to maintain all books, records and reports required under this contract for a period of not less than three years after final payment is made and all pending matters are closed.

A2 AFFIRMATIVE ACTION REQUIREMENT

A2.1 SOURCE

41 CFR part 60-4

Executive Order 11246

A2.2 APPLICABILITY

Minority Participation. Sponsors are required to set goals for minority participation in AIP funded projects exceeding $10,000. The goals for minority participation derive from Economic Area (EA) and Standard Metropolitan Statistical Area (SMSA) as established in Volume 45 of the Federal Register dated 10/3/80. Page 65984 contains a table of all EAs and SMSAs and the associated minority participation goals.

To find the goals for minority participation, a sponsor must either refer to the Federal Register Notice or to the Department of Labor online document, "Participation Goals for Minorities and Females". EAs and SMSAs span state boundaries. A sponsor may have to refer to entries for adjacent states in order to locate the goal for the project location.

Female Participation. Executive Order 11246 has set a goal of 6.9% nationally for female participation for all construction projects. This value remains constant for all counties and states.

Contract Types –

Construction – The sponsor must incorporate this notice in all solicitations for bids or requests for proposals for AIP funded construction work contracts and subcontracts that exceed $10,000. Construction work means construction, rehabilitation, alteration, conversion, extension, demolition or repair of buildings, highways or other changes or improvements to real property, including facilities providing utility services. The term also includes the supervision, inspection and other onsite functions incidental to the actual construction.

Equipment – The sponsor must incorporate this notice in any equipment project exceeding $10,000 that involves installation of equipment onsite (e.g. electrical vault equipment). This provision does not apply to equipment acquisition projects where the manufacture of the equipment takes place offsite at a manufacturer's plant (e.g. firefighting and snow removal vehicles).

Professional Services – The sponsor must incorporate this notice in any professional service agreement if the professional services agreement includes tasks that meet the definition of construction work [as defined by the U.S. Department of Labor (DOL)] and exceeds $10,000. Examples include installation of monitoring systems (e.g. noise, environmental, etc.).

Property/Land – The sponsor must incorporate this notice in any agreement associated with land acquisition if the agreement includes construction work (defined above) that exceeds $10,000. Examples include demolition of structures or installation of boundary fencing.

Use of Provision – **MANDATORY TEXT**. The sponsor must:

(a) Incorporate the text of this provision in its solicitations without modification.
(b) Incorporate the applicable minority participation goal and the covered area by geographic name.
(c) Not simply insert a reference to the 1980 Federal Register Notice.

A2.3 SOLICITATION CLAUSE

NOTICE OF REQUIREMENT FOR AFFIRMATIVE ACTION to ENSURE EQUAL EMPLOYMENT OPPORTUNITY

1. The Offeror's or Bidder's attention is called to the "Equal Opportunity Clause" and the "Standard Federal Equal Employment Opportunity Construction Contract Specifications" set forth herein.

2. The goals and timetables for minority and female participation, expressed in percentage terms for the Contractor's aggregate workforce in each trade on all construction work in the covered area, are as follows:

Timetables

Goals for minority participation for each trade: **15.4%**

Goals for female participation in each trade: 6.9%

These goals are applicable to all of the Contractor's construction work (whether or not it is Federal or federally assisted) performed in the covered area. If the Contractor performs construction work in a geographical area located outside of the covered area, it shall apply the goals established for such geographical area where the work is actually performed. With regard to this second area, the Contractor also is subject to the goals for both its federally involved and non-federally involved construction.

The Contractor's compliance with the Executive Order and the regulations in 41 CFR Part 60-4 shall be based on its implementation of the Equal Opportunity Clause, specific affirmative action obligations required by the specifications set forth in 41 CFR 60-4.3(a) and its efforts to meet the goals. The hours of minority and female employment and training must be substantially uniform throughout the length of the contract, and in each trade, and the Contractor shall make a good faith effort to employ minorities and women evenly on each of its projects. The transfer of minority or female employees or trainees from Contractor to Contractor or from project to project for the sole purpose of meeting the Contractor's goals shall be a violation of the contract, the Executive Order and the regulations in 41 CFR Part 60-4. Compliance with the goals will be measured against the total work hours performed.

3. The Contractor shall provide written notification to the Director of the Office of Federal Contract Compliance Programs (OFCCP) within 10 working days of award of any construction subcontract in excess of $10,000 at any tier for construction work under the contract resulting from this solicitation. The notification shall list the name, address, and telephone number of the subcontractor; employer identification number of the subcontractor; estimated dollar amount of the subcontract; estimated starting and completion dates of the subcontract; and the geographical area in which the subcontract is to be performed.

4. As used in this notice and in the contract resulting from this solicitation, the "covered area" is **Okaloosa County, Florida.**

A3 BREACH OF CONTRACT TERMS

A3.1 SOURCE

2 CFR § 200 Appendix II(A)

A3.2 APPLICABILITY

This provision requires sponsors to incorporate administrative, contractual or legal remedies if contractor violate or breach contract terms. The sponsor must also include appropriate sanctions and penalties.

Contract Types – This provision is required for all contracts that exceed the simplified acquisition threshold as stated in 2 CFR Part 200, Appendix II (A). This threshold is occasionally adjusted for inflation and is now equal to $150,000.

Use of Provision – No mandatory language provided. The following language is acceptable to the FAA as meeting the intent of this requirement. If the sponsor uses different language, the sponsor's language must fully satisfy the requirements of part 200. Select either "contractor" or "consultant" as applicable.

A3.3 CONTRACT CLAUSE

BREACH OF CONTRACT TERMS

Any violation or breach of terms of this contract on the part of the *Contractor* or its subcontractors may result in the suspension or termination of this contract or such other action that may be necessary to enforce the rights of the parties of this agreement.

Owner will provide *Contractor* written notice that describes the nature of the breach and corrective actions the *Contractor* must undertake in order to avoid termination of the contract. Owner reserves the right to withhold payments to Contractor until such time the Contractor corrects the breach or the Owner elects to terminate the contract. The Owner's notice will identify a specific date by which the *Contractor* must correct the breach. Owner may proceed with termination of the contract if the *Contractor* fails to correct the breach by the deadline indicated in the Owner's notice.

The duties and obligations imposed by the Contract Documents and the rights and remedies available thereunder are in addition to, and not a limitation of, any duties, obligations, rights and remedies otherwise imposed or available by law.

A4 BUY AMERICAN PREFERENCE

A4.1 SOURCE

Title 49 USC § 50101

A4.2 APPLICABILITY

The Buy American Preference requirement in 49 USC § 50101 requires that all steel and manufactured goods used on AIP projects be produced in the United States. The statute gives the FAA the ability to issue a waiver to a sponsor to use non-domestic material on an AIP funded project subject to meeting certain conditions. A sponsor may request that the FAA issue a waiver from the Buy American Preference requirements if the FAA finds that:

1) Applying the provision is not in the public interest;
2) The steel or manufactured goods are not available in sufficient quantity or quality in the United States;
3) The cost of components and subcomponents produced in the United States is more than 60 percent of the total components of a facility or equipment, and final assembly has taken place in the United States. Items that have an FAA standard specification item number (such as specific airport lighting equipment) are considered the equipment.
4) Applying this provision would increase the cost of the overall project by more than 25 percent.

Timing of Waiver Requests. Sponsors desiring a Type 1 or Type 2 waiver must submit their waiver requests *before* issuing a solicitation for bids or a request for proposal for a project.

The sponsor must submit Type 3 or Type 4 waiver requests *prior* to executing the contract. The FAA will generally not consider waiver requests after execution of the contract except where extraordinary and extenuating circumstances exist. The FAA cannot review waiver requests with incomplete information. Sponsors must assess the adequacy of the waiver request and associated information prior to forwarding a waiver request to the FAA for action.

Buy American Conformance List. The FAA Office of Airports maintains a listing of equipment that has received a nationwide waiver from the Buy American Preference requirements or that fully meet the Buy American requirements. The Nationwide Buy American Waiver List is available online at www.faa.gov/airports/aip/buy_american/. Products listed on the Buy American Conformance list do not require additional submittal of domestic content information under a project specific Buy American Preference waiver.

Facility Waiver Requests. For construction of a facility, the sponsor may submit the waiver request after bid opening, but prior to contract execution. Examples of facility construction include terminal buildings, terminal renovation, and snow removal equipment buildings.

Contract Types –

Construction and Equipment – The sponsor must meet the Buy American Preference requirements of 49 USC § 50101 for all AIP funded projects that require steel or manufactured

goods. The Buy America requirements flow down from the sponsor to first tier contractors, who are responsible for ensuring that lower tier contractors and subcontractors are also in compliance.

Note: The Buy American Preference does not apply to equipment a contractor uses as a tool of its trade and which does not remain as part of the project.

Professional Services – Professional service agreements (PSAs) do not normally result in a deliverable that meets the definition of a manufactured product. However, the emergence of various project delivery methods has created situations where task deliverables under a PSA may include a manufactured product. If a PSA includes providing a manufactured good as a deliverable under the contract, the sponsor must include the Buy American Preference provision in the agreement.

Property – Most land transactions do not involve acquiring a manufactured product. However, under certain circumstances, a property acquisition project could result in the installation of a manufactured product. For example, the installation of property fencing, gates, doors and locks, etc. represent manufactured products acquired under an AIP funded land project that must comply with Buy American Preferences.

Use of Provision – No mandatory language provided. The following language is acceptable to the FAA and meets the intent of this requirement. If the sponsor uses different language, the sponsor's revised language must fully comply with 49 USC § 50101.

There are two types of Buy American certifications. The sponsor must incorporate the appropriate "Certificate of Buy America Compliance" in the solicitation:

- Projects for a facility (buildings such as terminals, snow removal equipment (SRE) buildings, aircraft rescue and firefighting (ARFF) buildings, etc.) – Insert the Certificate of Compliance Based on Total Facility.
- Projects for non-facility development (non-building construction projects such as runway or roadway construction or equipment acquisition projects) – Insert the Certificate of Compliance Based on Equipment and Materials Used on the Project.

A4.3 SOLICITATION CLAUSE

A4.3.1 Buy American Preference Statement

BUY AMERICAN PREFERENCE

The Contractor agrees to comply with 49 USC § 50101, which provides that Federal funds may not be obligated unless all steel and manufactured goods used in AIP funded projects are produced in the United States, unless the Federal Aviation Administration has issued a waiver for the product; the product is listed as an Excepted Article, Material Or Supply in Federal Acquisition Regulation subpart 25.108; or is included in the FAA Nationwide Buy American Waivers Issued list.

A bidder or offeror must complete and submit the Buy America certification included herein with their bid or offer. The Owner will reject as nonresponsive any bid or offer that does not include a completed Certificate of Buy American Compliance.

A4.3.2 Certificate of Buy American Compliance – Manufactured Product

Certificate of Buy American Compliance for Manufactured Products

As a matter of bid responsiveness, the bidder or offeror must complete, sign, date, and submit this certification statement with their proposal. The bidder or offeror must indicate how they intend to comply with 49 USC § 50101 by selecting one on the following certification statements. These statements are mutually exclusive. Bidder must select one or the other (not both) by inserting a checkmark (✓) or the letter "X".

☐ Bidder or offeror hereby certifies that it will comply with 49 USC § 50101 by:

a) Only installing steel and manufactured products produced in the United States;
b) Installing manufactured products for which the Federal Aviation Administration (FAA) has issued a waiver as indicated by inclusion on the current FAA Nationwide Buy American Waivers Issued listing; or
c) Installing products listed as an Excepted Article, Material or Supply in Federal Acquisition Regulation Subpart 25.108.

By selecting this certification statement, the bidder or offeror agrees:

1. To provide to the Owner evidence that documents the source and origin of the steel and manufactured product.
2. To faithfully comply with providing U.S. domestic product.
3. To furnish U.S. domestic product for any waiver request that the FAA rejects
4. To refrain from seeking a waiver request after establishment of the contract, unless extenuating circumstances emerge that the FAA determines justified.

☐ The bidder or offeror hereby certifies it cannot comply with the 100 percent Buy American Preferences of 49 USC § 50101(a) but may qualify for either a Type 3 or Type 4 waiver under 49 USC § 50101(b). By selecting this certification statement, the apparent bidder or offeror with the apparent low bid agrees:

1. To the submit to the Owner within 15 calendar days of the bid opening, a formal waiver request and required documentation that supports the type of waiver being requested.
2. That failure to submit the required documentation within the specified timeframe is cause for a non-responsive determination may result in rejection of the proposal.
3. To faithfully comply with providing U.S. domestic products at or above the approved U.S. domestic content percentage as approved by the FAA.
4. To refrain from seeking a waiver request after establishment of the contract, unless extenuating circumstances emerge that the FAA determines justified.

Required Documentation

Type 3 Waiver – The cost of the item components and subcomponents produced in the United States is more that 60 percent of the cost of all components and subcomponents of the "item". The required documentation for a Type 3 waiver is:

a) Listing of all product components and subcomponents that are not comprised of 100 percent U.S. domestic content (Excludes products listed on the FAA Nationwide Buy American Waivers Issued listing and products excluded by Federal Acquisition Regulation Subpart 25.108; products of unknown origin must be considered as non-domestic products in their entirety).
b) Cost of non-domestic components and subcomponents, excluding labor costs associated with final assembly at place of manufacture.
c) Percentage of non-domestic component and subcomponent cost as compared to total "item" component and subcomponent costs, excluding labor costs associated with final assembly at place of manufacture.

Type 4 Waiver – Total cost of project using U.S. domestic source product exceeds the total project cost using non-domestic product by 25 percent. The required documentation for a Type 4 of waiver is:

a) Detailed cost information for total project using U.S. domestic product
b) Detailed cost information for total project using non-domestic product

False Statements: Per 49 USC § 47126, this certification concerns a matter within the jurisdiction of the Federal Aviation Administration and the making of a false, fictitious or fraudulent certification may render the maker subject to prosecution under Title 18, United States Code.

USE FORM PROVIDED IN BID FORMS SECTION

A5 CIVIL RIGHTS - GENERAL

A5.1 SOURCE

49 USC § 47123

A5.2 APPLICABILITY

There are two separate civil rights provisions that apply to projects:

1. FAA General Civil Rights Provision and,
2. Title VI provisions, which are addressed in Appendix A6.

Contract Types – The General Civil Rights Provisions found in 49 USC § 47123, derived from the Airport and Airway Improvement Act of 1982, Section 520, apply to all sponsor contracts *regardless* of funding source.

Use of Provision – **MANDATORY TEXT**. There are two separate general civil rights provisions —one that is used for contracts, and one that is used for lease agreements or transfer agreements. The sponsor must incorporate the text of the appropriate provision without modification into the contract, or the lease or transfer agreement.

A5.3 CONTRACT CLAUSE (Use the Correct Clause for the Situation)

A5.3.1 Clause that is used for Contracts

GENERAL CIVIL RIGHTS PROVISIONS

The Contractor agrees to comply with pertinent statutes, Executive Orders and such rules as are promulgated to ensure that no person shall, on the grounds of race, creed, color, national origin, sex, age, or disability be excluded from participating in any activity conducted with or benefiting from Federal assistance.

This provision binds the Contractor and subcontractors from the bid solicitation period through the completion of the contract. This provision is in addition to that required by Title VI of the Civil Rights Act of 1964.

A5.3.2 Clause that is used for Lease Agreements or Transfer Agreements

GENERAL CIVIL RIGHTS PROVISIONS

The (tenant/concessionaire/lessee) agrees to comply with pertinent statutes, Executive Orders and such rules as are promulgated to ensure that no person shall, on the grounds of race, creed, color, national origin, sex, age, or disability be excluded from participating in any activity conducted with or benefiting from Federal assistance. If the (tenant/concessionaire/lessee) transfers its obligation to another, the transferee is obligated in the same manner as the (tenant/concessionaire/lessor).

This provision obligates the (tenant/concessionaire/lessee) for the period during which the property is owned, used or possessed by the (tenant/concessionaire/lessee) and the airport remains obligated to the

Federal Aviation Administration. This provision is in addition to that required by Title VI of the Civil Rights Act of 1964.

A6 CIVIL RIGHTS – TITLE VI ASSURANCE

A6.1 SOURCE

49 USC § 47123

FAA Order 1400.11

A6.2 APPLICABILITY

Title VI of the Civil Rights Act of 1964, as amended, (Title VI) prohibits discrimination on the grounds of race, color, or national origin under any program or activity receiving Federal financial assistance. Sponsors must include appropriate clauses from the Standard DOT Title VI Assurances in all contracts and solicitations.

The text of each individual clause comes from the U.S. Department of Transportation Order DOT 1050.2, Standard Title VI Assurances and Nondiscrimination Provisions, effective April 24, 2013. These assurances require that the Recipient (the sponsor) insert the appropriate clauses in the form provided by the DOT. Where the clause refers to the applicable activity, project, or program, it means the AIP project.

The clauses are as follows:

A6.2.1 Applicability of Title VI Solicitation Notice

Contract Clause	**The Sponsor must include the contract clause in:**	**Clause Text is Included in Paragraph**
Title VI Solicitation Notice – • Assurance 2 of the DOT Standard Title VI Assurances and Nondiscrimination Clauses • Assurance 30d of the Airport Sponsor Assurances	1) All AIP funded solicitations for bids, requests for proposals, or any work subject to Title VI regulations; and 2) All sponsor proposals for negotiated agreements **regardless of funding source.**	A6.3.1
Title VI Clauses for Compliance with Nondiscrimination Requirements • Assurance 3 of the DOT Standard Title VI Assurances and Nondiscrimination Clauses • Assurance 30e.1 of the Airport Sponsor Assurances	Every contract or agreement (unless the sponsor has determined, and the FAA concurs, that the contract or agreement is not subject to the Nondiscrimination Acts and Authorities) It has been determined that service contracts with utility companies that are not already subject to nondiscrimination requirements must include this clause.	A6.4.1

Contract Clause	The Sponsor must include the contract clause in:	Clause Text is Included in Paragraph
Title VI Required Clause for Property Interests Transferred from the United States • Assurance 4 of the DOT Standard Title VI Assurances and Nondiscrimination Clauses • Assurance 30e.3 of the Airport Sponsor Assurances	As a covenant running with the land, in any deed from the United States effecting or recording a transfer of real property, structures, use, or improvements thereon or interest therein to a sponsor. This is a rare occurrence and it will be the responsibility of the United States government to include the clause in the contract.	A6.4.2
Title VI Required Clause for Transfer of Real Property Acquired or Improved Under the Activity, Facility or Program – • Assurance 5 of the DOT Standard Title VI Assurances and Nondiscrimination Clauses • Assurance 30e.4a of the Airport Sponsor Assurances	As a covenant running with the land, in any future deeds, leases, licenses, permits, or similar instruments entered into by the sponsor with other parties for all transfers of real property acquired or improved under Airport Improvement Program This applies to agreements such as leases where a physical portion of the airport is transferred for use, for example a fuel farm, apron space, or a parking facility.	A6.4.3
Clause for Construction/Use/Access to Real Property Acquired Under the Activity, Facility or Program • Assurance 6 of the DOT Standard Title VI Assurances and Nondiscrimination Clauses • Assurance 30e.4b of the Airport Sponsor Assurances	In any future (deeds, leases, licenses, permits, or similar instruments) entered into by the sponsor with other parties for the construction or use of, or access to, space on, over, or under real property acquired or improved under Airport Improvement Program This applies to agreements such as leases of concession space in a terminal.	A6.4.4
Title VI List of Pertinent Nondiscrimination Acts and Authorities • Assurance 3 of the DOT Standard Title VI Assurances and Nondiscrimination Clauses • Assurance 30e.2 of the Airport Sponsor Assurances	Insert this list in every contract or agreement, unless the sponsor has determined, and the FAA concurs, that the contract or agreement is not subject to the Nondiscrimination Acts and Authorities. **This list can be omitted if the FAA has determined that the contractor or company is already subject to nondiscrimination requirements.**	A6.4.5

A6.3 SOLICITATION CLAUSE

The sponsor must include this clause in:

1) All AIP funded solicitations for bids, requests for proposals, or any work subject to Title VI regulations; and
2) All sponsor proposals for negotiated agreements **regardless of funding source.**

A6.3.1 Title VI Solicitation Notice

Title VI Solicitation Notice:

The **(Name of Sponsor)**, in accordance with the provisions of Title VI of the Civil Rights Act of 1964 (78 Stat. 252, 42 USC §§ 2000d to 2000d-4) and the Regulations, hereby notifies all bidders or offerors that it will affirmatively ensure that any contract entered into pursuant to this advertisement, [select disadvantaged business enterprises or airport concession disadvantaged business enterprises] will be afforded full and fair opportunity to submit bids in response to this invitation and will not be discriminated against on the grounds of race, color, or national origin in consideration for an award.

A6.4 CONTRACT CLAUSES

A6.4.1 Title VI Clauses for Compliance with Nondiscrimination Requirements

The sponsor must include this contract clause in:

1) Every contract or agreement (unless the sponsor has determined, and the FAA concurs, that the contract or agreement is not subject to the Nondiscrimination Acts and Authorities); and

2) Service contracts with utility companies that are not already subject to nondiscrimination requirements.

Compliance with Nondiscrimination Requirements:

During the performance of this contract, the Contractor, for itself, its assignees, and successors in interest (hereinafter referred to as the "Contractor"), agrees as follows:

1. **Compliance with Regulations:** The Contractor (hereinafter includes consultants) will comply with the Title VI List of Pertinent Nondiscrimination Acts and Authorities, as they may be amended from time to time, which are herein incorporated by reference and made a part of this contract.
2. **Nondiscrimination:** The Contractor, with regard to the work performed by it during the contract, will not discriminate on the grounds of race, color, or national origin in the selection and retention of subcontractors, including procurements of materials and leases of equipment. The Contractor will not participate directly or indirectly in the discrimination prohibited by the Nondiscrimination Acts and Authorities, including employment practices when the contract covers any activity, project, or program set forth in Appendix B of 49 CFR part 21.
3. **Solicitations for Subcontracts, including Procurements of Materials and Equipment:** In all solicitations, either by competitive bidding or negotiation made by the Contractor for work to be performed under a subcontract, including procurements of materials, or leases of equipment, each potential subcontractor or supplier will be notified by the Contractor of the contractor's obligations under this contract and the Nondiscrimination Acts and Authorities on the grounds of race, color, or national origin.
4. **Information and Reports:** The Contractor will provide all information and reports required by the Acts, the Regulations, and directives issued pursuant thereto and will permit access to its books, records, accounts, other sources of information, and its facilities as may be determined by the sponsor or the Federal Aviation Administration to be pertinent to ascertain compliance with such Nondiscrimination Acts and Authorities and instructions. Where any information required of a contractor is in the exclusive possession of another who fails or refuses to furnish the information, the Contractor will so certify to the sponsor or the Federal Aviation Administration, as appropriate, and will set forth what efforts it has made to obtain the information.
5. **Sanctions for Noncompliance:** In the event of a Contractor's noncompliance with the non-discrimination provisions of this contract, the sponsor will impose such contract sanctions as it or the Federal Aviation Administration may determine to be appropriate, including, but not limited to:

a. Withholding payments to the Contractor under the contract until the Contractor complies; and/or

b. Cancelling, terminating, or suspending a contract, in whole or in part.

6. **Incorporation of Provisions:** The Contractor will include the provisions of paragraphs one through six in every subcontract, including procurements of materials and leases of equipment, unless exempt by the Acts, the Regulations, and directives issued pursuant thereto. The Contractor will take action with respect to any subcontract or procurement as the sponsor or the Federal Aviation Administration may direct as a means of enforcing such provisions including sanctions for noncompliance. Provided, that if the Contractor becomes involved in, or is threatened with litigation by a subcontractor, or supplier because of such direction, the Contractor may request the sponsor to enter into any litigation to protect the interests of the sponsor. In addition, the Contractor may request the United States to enter into the litigation to protect the interests of the United States.

A6.4.2 Title VI Clauses for Deeds Transferring United States Property

This is a rare occurrence, and it will be the responsibility of the United States government to include the clause in the contract. It will be included as a covenant running with the land, in any deed from the United States effecting or recording a transfer of real property, structures, use, or improvements thereon or interest therein to a sponsor.

A6.4.3 Title VI Clauses for Transfer of Real Property Acquired or Improved Under the Activity, Facility, or Program (OMITTED)

A6.4.4 Title VI Clauses for Construction/Use/Access to Real Property Acquired Under the Activity, Facility or Program (OMITTED)

A6.4.5 Title VI List of Pertinent Nondiscrimination Acts and Authorities

Insert this list in every contract or agreement, unless the sponsor has determined and the FAA concurs, that the contract or agreement is not subject to the Nondiscrimination Acts and Authorities. This list can be omitted if the FAA has determined that the contractor or company is already subject to nondiscrimination requirements.

Title VI List of Pertinent Nondiscrimination Acts and Authorities

During the performance of this contract, the Contractor, for itself, its assignees, and successors in interest (hereinafter referred to as the "Contractor") agrees to comply with the following non-discrimination statutes and authorities; including but not limited to:

- Title VI of the Civil Rights Act of 1964 (42 USC § 2000d *et seq*., 78 stat. 252) (prohibits discrimination on the basis of race, color, national origin);
- 49 CFR part 21 (Non-discrimination in Federally-assisted programs of the Department of Transportation—Effectuation of Title VI of the Civil Rights Act of 1964);
- The Uniform Relocation Assistance and Real Property Acquisition Policies Act of 1970, (42 USC § 4601) (prohibits unfair treatment of persons displaced or whose property has been acquired because of Federal or Federal-aid programs and projects);
- Section 504 of the Rehabilitation Act of 1973 (29 USC § 794 *et seq*.), as amended (prohibits discrimination on the basis of disability); and 49 CFR part 27;
- The Age Discrimination Act of 1975, as amended (42 USC § 6101 *et seq*.) (prohibits discrimination on the basis of age);
- Airport and Airway Improvement Act of 1982 (49 USC § 471, Section 47123), as amended (prohibits discrimination based on race, creed, color, national origin, or sex);
- The Civil Rights Restoration Act of 1987 (PL 100-209) (broadened the scope, coverage and applicability of Title VI of the Civil Rights Act of 1964, the Age Discrimination Act of 1975 and Section 504 of the Rehabilitation Act of 1973, by expanding the definition of the terms "programs or activities" to include all of the programs or activities of the Federal-aid recipients, sub-recipients and contractors, whether such programs or activities are Federally funded or not);
- Titles II and III of the Americans with Disabilities Act of 1990, which prohibit discrimination on the basis of disability in the operation of public entities, public and private transportation systems, places of public accommodation, and certain testing entities (42 USC §§ 12131 – 12189) as implemented by U.S. Department of Transportation regulations at 49 CFR parts 37 and 38;
- The Federal Aviation Administration's Nondiscrimination statute (49 USC § 47123) (prohibits discrimination on the basis of race, color, national origin, and sex);
- Executive Order 12898, Federal Actions to Address Environmental Justice in Minority Populations and Low-Income Populations, which ensures nondiscrimination against minority populations by discouraging programs, policies, and activities with disproportionately high and adverse human health or environmental effects on minority and low-income populations;
- Executive Order 13166, Improving Access to Services for Persons with Limited English Proficiency, and resulting agency guidance, national origin discrimination includes discrimination because of limited English proficiency (LEP). To ensure compliance with Title VI, you must take reasonable steps to ensure that LEP persons have meaningful access to your programs (70 Fed. Reg. at 74087 to 74100);

- Title IX of the Education Amendments of 1972, as amended, which prohibits you from discriminating because of sex in education programs or activities (20 USC 1681 et seq).

A7 CLEAN AIR AND WATER POLLUTION CONTROL

A7.1 SOURCE

2 CFR § 200, Appendix II(G)

A7.2 APPLICABILITY

Contract Types – This provision is required for all contracts and lower tier contracts that exceed $150,000.

Use of Provision – No mandatory language provided. The following language is acceptable to the FAA and meets the intent of this requirement. If the sponsor uses different language, the sponsor's language must fully satisfy the requirements of Appendix II to 2 CFR §200.

A7.3 CONTRACT CLAUSE

CLEAN AIR AND WATER POLLUTION CONTROL

Contractor agrees to comply with all applicable standards, orders, and regulations issued pursuant to the Clean Air Act (42 USC § 740-7671q) and the Federal Water Pollution Control Act as amended (33 USC § 1251-1387). The Contractor agrees to report any violation to the Owner immediately upon discovery. The Owner assumes responsibility for notifying the Environmental Protection Agency (EPA) and the Federal Aviation Administration.

Contractor must include this requirement in all subcontracts that exceeds $150,000.

A8 CONTRACT WORKHOURS AND SAFETY STANDARDS ACT REQUIREMENTS

A8.1 SOURCE

2 CFR § 200, Appendix II(E)

A8.2 APPLICABILITY

Contract Workhours and Safety Standards Act Requirements (CWHSSA) requires contractors and subcontractors on covered contracts to pay laborers and mechanics employed in the performance of the contracts one and one-half times their basic rate of pay for all hours worked over 40 in a workweek. CWHSSA prohibits unsanitary, hazardous, or dangerous working conditions on federally assisted projects. The Wage and Hour Division (WHD) within the U.S. Department of Labor (DOL) enforces the compensation requirements of this Act, while DOL's Occupational Safety and Health Administration (OSHA) enforces the safety and health requirements

Contract Types –

Construction – This provision applies to all contracts and lower tier contracts that exceed $100,000, and employ laborers, mechanics, watchmen, and guards.

Equipment – This provision applies to any equipment project exceeding $100,000 that involves installation of equipment onsite (e.g. electrical vault equipment). This provision does not apply to equipment acquisition projects where the manufacture of the equipment takes place offsite at the vendor plant (e.g. ARFF and SRE vehicles).

Professional Services – This provision applies to professional service agreements that exceed $100,000 and employs laborers, mechanics, watchmen, and guards. This includes members of survey crews and exploratory drilling operations.

Property – While most land transactions do not involve employment of laborers, mechanics, watchmen, and guards, under certain circumstances, a property acquisition project could require such employment. Examples include the installation of property fencing or testing for environmental contamination

Use of Provision – **MANDATORY TEXT.** Sponsors must incorporate this text without modification.

A8.3 CONTRACT CLAUSE

CONTRACT WORKHOURS AND SAFETY STANDARDS ACT REQUIREMENTS

1. Overtime Requirements.

No contractor or subcontractor contracting for any part of the contract work which may require or involve the employment of laborers or mechanics shall require or permit any such laborer or mechanic, including watchmen and guards, in any workweek in which he or she is employed on such work to work in excess of forty hours in such workweek unless such laborer or mechanic receives compensation at a

rate not less than one and one-half times the basic rate of pay for all hours worked in excess of forty hours in such workweek.

2. Violation; Liability for Unpaid Wages; Liquidated Damages.

In the event of any violation of the clause set forth in paragraph (1) of this clause, the Contractor and any subcontractor responsible therefor shall be liable for the unpaid wages. In addition, such contractor and subcontractor shall be liable to the United States (in the case of work done under contract for the District of Columbia or a territory, to such District or to such territory), for liquidated damages. Such liquidated damages shall be computed with respect to each individual laborer or mechanic, including watchmen and guards, employed in violation of the clause set forth in paragraph (1) of this clause, in the sum of $10 for each calendar day on which such individual was required or permitted to work in excess of the standard workweek of forty hours without payment of the overtime wages required by the clause set forth in paragraph (1) of this clause.

3. Withholding for Unpaid Wages and Liquidated Damages.

The Federal Aviation Administration (FAA) or the Owner shall upon its own action or upon written request of an authorized representative of the Department of Labor withhold or cause to be withheld, from any moneys payable on account of work performed by the contractor or subcontractor under any such contract or any other Federal contract with the same prime contractor, or any other federally assisted contract subject to the Contract Work Hours and Safety Standards Act, which is held by the same prime contractor, such sums as may be determined to be necessary to satisfy any liabilities of such contractor or subcontractor for unpaid wages and liquidated damages as provided in the clause set forth in paragraph (2) of this clause.

4. Subcontractors.

The Contractor or subcontractor shall insert in any subcontracts the clauses set forth in paragraphs (1) through (4) and also a clause requiring the subcontractor to include these clauses in any lower tier subcontracts. The prime contractor shall be responsible for compliance by any subcontractor or lower tier subcontractor with the clauses set forth in paragraphs (1) through (4) of this clause.

A9 COPELAND "ANTI-KICKBACK" ACT

A9.1 SOURCE

2 CFR § 200, Appendix II(D)

29 CFR Parts 3 and 5

A9.2 APPLICABILITY and PURPOSE

The Copeland (Anti-Kickback) Act (18 USC 874 and 40 USC 3145) makes it unlawful to induce by force, intimidation, threat of dismissal from employment, or by any other manner, any person employed in the construction or repair of public buildings or public works, financed in whole or in part by the United States, to give up any part of the compensation to which that person is entitled under a contract of employment. The Copeland Act also requires each contractor and subcontractor to furnish weekly a statement of compliance with respect to the wages paid each employee during the preceding week.

Contract Types –

Construction – This provision applies to all construction contracts and subcontracts financed under the AIP that exceed $2,000.

Equipment – This provision applies to all equipment installation projects (e.g. electrical vault improvements) financed under the AIP that exceed $2,000. This provision does not apply to equipment acquisitions where the equipment is manufactured at the vendor's plant (e.g. SRE and ARFF vehicles).

Professional Services –The emergence of different project delivery methods has created situations where Professional Service Agreements (PSAs) include tasks that meet the definition of construction, alteration, or repair as defined in 29 CFR Part 5. If such tasks result in work that qualifies as construction, alteration, or repair and it exceeds $2,000, the PSA must incorporate the Copeland Anti-kickback provision.

Property –Ordinarily, land acquisition projects would not involve employment of laborers or mechanics and thus the Copeland Anti-Kickback provision would not apply. However, land projects that involve installation of boundary fencing and demolition of structures would involve laborers and mechanics. The sponsor must include this provision if the land acquisition project involves employment of laborers or mechanics for a contract exceeding $2,000.

Use of Provision – **MANDATORY TEXT.** 29 CFR Part 5 establishes specific language a sponsor must use in construction contracts. The sponsor may not make any modification to the standard language. Architectural/Engineering (A/E) firms that employ laborers and mechanics on a task that meets the definition of construction, alteration, or repair are acting as a contractor. The sponsor may not substitute the term "contractor" for "consultant" in such instances.

A9.3 CONTRACT CLAUSE

COPELAND "ANTI-KICKBACK" ACT

Contractor must comply with the requirements of the Copeland "Anti-Kickback" Act (18 USC 874 and 40 USC 3145), as supplemented by Department of Labor regulation 29 CFR part 3. Contractor and subcontractors are prohibited from inducing, by any means, any person employed on the project to give up any part of the compensation to which the employee is entitled. The Contractor and each Subcontractor must submit to the Owner, a weekly statement on the wages paid to each employee performing on covered work during the prior week. Owner must report any violations of the Act to the Federal Aviation Administration.

A10 DAVIS-BACON REQUIREMENTS

A10.1 SOURCE

2 CFR § 200, Appendix II(D)

29 CFR Part 5

A10.2 APPLICABILITY

The Davis-Bacon Act ensures that laborers and mechanics employed under the contract receive pay no less than the locally prevailing wages and fringe benefits as determined by the Department of Labor.

Contract Types –

Construction – Incorporate into all construction contracts and subcontracts that exceed $2,000 and include funding from the AIP.

Equipment – This provision applies to all equipment installation projects (e.g. electrical vault improvements) financed under the AIP that exceed $ 2, 000. This provision does not apply to equipment acquisitions where the equipment is manufactured at the vendor's plant (e.g. SRE and ARFF vehicles)

Professional Services – The emergence of different project delivery methods has created situations where Professional Service Agreements (PSAs) includes tasks that meet the definition of construction, alteration, or repair as defined in 29 CFR Part 5. If such tasks result in work that qualifies as construction, alteration, or repair and it exceeds $2,000, the PSA must incorporate this clause.

Property – Ordinarily, land acquisition projects would not involve employment of laborers or mechanics and thus the provision would not apply. However, land projects that involve installation of boundary fencing and demolition of structures would involve laborers and mechanics. The sponsor must include this provision if the land acquisition project involves employment of laborers or mechanics for a contract exceeding $2,000.

Fencing Projects – Fencing projects that exceed $2,000 must include this provision.

Use of Provision – **MANDATORY TEXT.** 29 CFR part 5 establishes specific language a sponsor must use. The sponsor may not make any modification to the standard language. A/E firms that employ laborers and mechanics on a task that meets the definition of construction, alteration, or repair are acting as a contractor. The sponsor may not substitute the term "Contractor" for "Consultant" in such instances.

A10.3 CONTRACT CLAUSE

DAVIS-BACON REQUIREMENTS

1. Minimum Wages.

(i) All laborers and mechanics employed or working upon the site of the work will be paid unconditionally and not less often than once a week, and without subsequent deduction or rebate on any

account (except such payroll deductions as are permitted by the Secretary of Labor under the Copeland Act (29 CFR Part 3)), the full amount of wages and bona fide fringe benefits (or cash equivalent thereof) due at time of payment computed at rates not less than those contained in the wage determination of the Secretary of Labor which is attached hereto and made a part hereof, regardless of any contractual relationship which may be alleged to exist between the Contractor and such laborers and mechanics.

Contributions made or costs reasonably anticipated for bona fide fringe benefits under section 1(b)(2) of the Davis-Bacon Act on behalf of laborers or mechanics are considered wages paid to such laborers or mechanics, subject to the provisions of paragraph (1)(iv) of this section; also, regular contributions made or costs incurred for more than a weekly period (but not less often than quarterly) under plans, funds, or programs which cover the particular weekly period, are deemed to be constructively made or incurred during such weekly period. Such laborers and mechanics shall be paid the appropriate wage rate and fringe benefits on the wage determination for the classification of work actually performed, without regard to skill, except as provided in 29 CFR Part 5.5(a)(4). Laborers or mechanics performing work in more than one classification may be compensated at the rate specified for each classification for the time actually worked therein: *Provided* that the employer's payroll records accurately set forth the time spent in each classification in which work is performed. The wage determination (including any additional classification and wage rates conformed under (1)(ii) of this section) and the Davis-Bacon poster (WH-1321) shall be posted at all times by the Contractor and its subcontractors at the site of the work in a prominent and accessible place where it can easily be seen by the workers.

(ii)(A) The contracting officer shall require that any class of laborers or mechanics, including helpers, which is not listed in the wage determination and which is to be employed under the contract shall be classified in conformance with the wage determination. The contracting officer shall approve an additional classification and wage rate and fringe benefits therefore only when the following criteria have been met:

(1) The work to be performed by the classification requested is not performed by a classification in the wage determination;

(2) The classification is utilized in the area by the construction industry; and

(3) The proposed wage rate, including any bona fide fringe benefits, bears a reasonable relationship to the wage rates contained in the wage determination.

(B) If the Contractor and the laborers and mechanics to be employed in the classification (if known), or their representatives, and the contracting officer agree on the classification and wage rate (including the amount designated for fringe benefits where appropriate), a report of the action taken shall be sent by the contracting officer to the Administrator of the Wage and Hour Division, Employment Standards Administration, U.S. Department of Labor, Washington, DC 20210. The Administrator, or an authorized representative, will approve, modify, or disapprove every additional classification action within 30 days of receipt and so advise the contracting officer or will notify the contracting officer within the 30-day period that additional time is necessary.

(C) In the event the Contractor, the laborers, or mechanics to be employed in the classification, or their representatives, and the contracting officer do not agree on the proposed classification and wage rate (including the amount designated for fringe benefits where appropriate), the contracting officer shall

refer the questions, including the views of all interested parties and the recommendation of the contracting officer, to the Administrator for determination. The Administrator, or an authorized representative, will issue a determination within 30 days of receipt and so advise the contracting officer or will notify the contracting officer within the 30-day period that additional time is necessary.

(D) The wage rate (including fringe benefits where appropriate) determined pursuant to subparagraphs (1)(ii) (B) or (C) of this paragraph, shall be paid to all workers performing work in the classification under this contract from the first day on which work is performed in the classification.

(iii) Whenever the minimum wage rate prescribed in the contract for a class of laborers or mechanics includes a fringe benefit which is not expressed as an hourly rate, the contractor shall either pay the benefit as stated in the wage determination or shall pay another bona fide fringe benefit or an hourly cash equivalent thereof.

(iv) If the Contractor does not make payments to a trustee or other third person, the Contractor may consider as part of the wages of any laborer or mechanic the amount of any costs reasonably anticipated in providing bona fide fringe benefits under a plan or program: *Provided* that the Secretary of Labor has found, upon the written request of the Contractor, that the applicable standards of the Davis-Bacon Act have been met. The Secretary of Labor may require the Contractor to set aside in a separate account assets for the meeting of obligations under the plan or program.

2. Withholding.

The Federal Aviation Administration or the sponsor shall upon its own action or upon written request of an authorized representative of the Department of Labor withhold or cause to be withheld from the Contractor under this contract or any other Federal contract with the same prime contractor, or any other federally-assisted contract subject to Davis-Bacon prevailing wage requirements, which is held by the same prime contractor, so much of the accrued payments or advances as may be considered necessary to pay laborers and mechanics, including apprentices, trainees, and helpers, employed by the Contractor or any subcontractor the full amount of wages required by the contract. In the event of failure to pay any laborer or mechanic, including any apprentice, trainee, or helper, employed or working on the site of work, all or part of the wages required by the contract, the Federal Aviation Administration may, after written notice to the Contractor, Sponsor, Applicant, or Owner, take such action as may be necessary to cause the suspension of any further payment, advance, or guarantee of funds until such violations have ceased.

3. Payrolls and Basic Records.

(i) Payrolls and basic records relating thereto shall be maintained by the Contractor during the course of the work and preserved for a period of three years thereafter for all laborers and mechanics working at the site of the work. Such records shall contain the name, address, and social security number of each such worker; his or her correct classification; hourly rates of wages paid (including rates of contributions or costs anticipated for bona fide fringe benefits or cash equivalents thereof of the types described in 1(b)(2)(B) of the Davis-Bacon Act); daily and weekly number of hours worked; deductions made; and actual wages paid. Whenever the Secretary of Labor has found under 29 CFR 5.5(a)(1)(iv) that the wages of any laborer or mechanic include the amount of any costs reasonably anticipated in providing benefits under a plan or program described in section 1(b)(2)(B) of the Davis-Bacon Act, the Contractor shall maintain records that show that the commitment to provide such benefits is

enforceable, that the plan or program is financially responsible, and that the plan or program has been communicated in writing to the laborers or mechanics affected, and that show the costs anticipated or the actual costs incurred in providing such benefits. Contractors employing apprentices or trainees under approved programs shall maintain written evidence of the registration of apprenticeship programs and certification of trainee programs, the registration of the apprentices and trainees, and the ratios and wage rates prescribed in the applicable programs.

(ii)(A) The Contractor shall submit weekly for each week in which any contract work is performed a copy of all payrolls to the Federal Aviation Administration if the agency is a party to the contract, but if the agency is not such a party, the Contractor will submit the payrolls to the applicant, Sponsor, or Owner, as the case may be, for transmission to the Federal Aviation Administration. The payrolls submitted shall set out accurately and completely all of the information required to be maintained under 29 CFR 5.5(a)(3)(i), except that full social security numbers and home addresses shall not be included on weekly transmittals. Instead the payrolls shall only need to include an individually identifying number for each employee (*e.g.* the last four digits of the employee's social security number). The required weekly payroll information may be submitted in any form desired. Optional Form WH–347 is available for this purpose from the Wage and Hour Division Web site at *www.dol.gov/whd/forms/wh347instr.htm* or its successor site. The prime contractor is responsible for the submission of copies of payrolls by all subcontractors. Contractors and subcontractors shall maintain the full social security number and current address of each covered worker and shall provide them upon request to the Federal Aviation Administration if the agency is a party to the contract, but if the agency is not such a party, the Contractor will submit them to the applicant, sponsor, or Owner, as the case may be, for transmission to the Federal Aviation Administration, the Contractor, or the Wage and Hour Division of the Department of Labor for purposes of an investigation or audit of compliance with prevailing wage requirements. It is not a violation of this section for a prime contractor to require a subcontractor to provide addresses and social security numbers to the prime contractor for its own records, without weekly submission to the sponsoring government agency (or the applicant, Sponsor, or Owner).

(B) Each payroll submitted shall be accompanied by a "Statement of Compliance," signed by the Contractor or subcontractor or his or her agent who pays or supervises the payment of the persons employed under the contract and shall certify the following:

(1) The payroll for the payroll period contains the information required to be provided under 29 CFR § 5.5(a)(3)(ii), the appropriate information is being maintained under 29 CFR § 5.5 (a)(3)(i), and that such information is correct and complete;

(2) Each laborer and mechanic (including each helper, apprentice, and trainee) employed on the contract during the payroll period has been paid the full weekly wages earned, without rebate, either directly or indirectly, and that no deductions have been made either directly or indirectly from the full wages earned, other than permissible deductions as set forth in Regulations 29 CFR Part 3;

(3) Each laborer or mechanic has been paid not less than the applicable wage rates and fringe benefits or cash equivalents for the classification of work performed, as specified in the applicable wage determination incorporated into the contract.

(C) The weekly submission of a properly executed certification set forth on the reverse side of Optional Form WH-347 shall satisfy the requirement for submission of the "Statement of Compliance" required by paragraph (3)(ii)(B) of this section.

(D) The falsification of any of the above certifications may subject the Contractor or subcontractor to civil or criminal prosecution under Section 1001 of Title 18 and Section 231 of Title 31 of the United States Code.

(iii) The Contractor or subcontractor shall make the records required under paragraph (3)(i) of this section available for inspection, copying, or transcription by authorized representatives of the sponsor, the Federal Aviation Administration, or the Department of Labor and shall permit such representatives to interview employees during working hours on the job. If the Contractor or subcontractor fails to submit the required records or to make them available, the Federal agency may, after written notice to the Contractor, Sponsor, applicant, or Owner, take such action as may be necessary to cause the suspension of any further payment, advance, or guarantee of funds. Furthermore, failure to submit the required records upon request or to make such records available may be grounds for debarment action pursuant to 29 CFR 5.12.

4. Apprentices and Trainees.

(i) Apprentices. Apprentices will be permitted to work at less than the predetermined rate for the work they performed when they are employed pursuant to and individually registered in a bona fide apprenticeship program registered with the U.S. Department of Labor, Employment and Training Administration, Bureau of Apprenticeship and Training, or with a State Apprenticeship Agency recognized by the Bureau, or if a person is employed in his or her first 90 days of probationary employment as an apprentice in such an apprenticeship program, who is not individually registered in the program, but who has been certified by the Bureau of Apprenticeship and Training or a State Apprenticeship Agency (where appropriate) to be eligible for probationary employment as an apprentice. The allowable ratio of apprentices to journeymen on the job site in any craft classification shall not be greater than the ratio permitted to the contractor as to the entire work force under the registered program. Any worker listed on a payroll at an apprentice wage rate, who is not registered or otherwise employed as stated above, shall be paid not less than the applicable wage rate on the wage determination for the classification of work actually performed. In addition, any apprentice performing work on the job site in excess of the ratio permitted under the registered program shall be paid not less than the applicable wage rate on the wage determination for the work actually performed. Where a contractor is performing construction on a project in a locality other than that in which its program is registered, the ratios and wage rates (expressed in percentages of the journeyman's hourly rate) specified in the Contractor's or subcontractor's registered program shall be observed. Every apprentice must be paid at not less than the rate specified in the registered program for the apprentice's level of progress, expressed as a percentage of the journeymen hourly rate specified in the applicable wage determination. Apprentices shall be paid fringe benefits in accordance with the provisions of the apprenticeship program. If the apprenticeship program does not specify fringe benefits, apprentices must be paid the full amount of fringe benefits listed on the wage determination for the applicable classification. If the Administrator determines that a different practice prevails for the applicable apprentice classification, fringes shall be paid in accordance with that determination. In the event the Bureau of Apprenticeship and Training, or a State Apprenticeship Agency recognized by the Bureau, withdraws approval of an apprenticeship program, the Contractor will no longer be permitted to utilize

apprentices at less than the applicable predetermined rate for the work performed until an acceptable program is approved.

(ii) Trainees. Except as provided in 29 CFR 5.16, trainees will not be permitted to work at less than the predetermined rate for the work performed unless they are employed pursuant to and individually registered in a program which has received prior approval, evidenced by formal certification by the U.S. Department of Labor, Employment and Training Administration. The ratio of trainees to journeymen on the job site shall not be greater than permitted under the plan approved by the Employment and Training Administration. Every trainee must be paid at not less than the rate specified in the approved program for the trainee's level of progress, expressed as a percentage of the journeyman hourly rate specified in the applicable wage determination. Trainees shall be paid fringe benefits in accordance with the provisions of the trainee program. If the trainee program does not mention fringe benefits, trainees shall be paid the full amount of fringe benefits listed on the wage determination unless the Administrator of the Wage and Hour Division determines that there is an apprenticeship program associated with the corresponding journeyman wage rate on the wage determination that provides for less than full fringe benefits for apprentices. Any employee listed on the payroll at a trainee rate that is not registered and participating in a training plan approved by the Employment and Training Administration shall be paid not less than the applicable wage rate on the wage determination for the classification of work actually performed. In addition, any trainee performing work on the job site in excess of the ratio permitted under the registered program shall be paid not less than the applicable wage rate on the wage determination for the work actually performed. In the event the Employment and Training Administration withdraws approval of a training program, the Contractor will no longer be permitted to utilize trainees at less than the applicable predetermined rate for the work performed until an acceptable program is approved.

(iii) Equal Employment Opportunity. The utilization of apprentices, trainees, and journeymen under this part shall be in conformity with the equal employment opportunity requirements of Executive Order 11246, as amended, and 29 CFR Part 30.

5. Compliance with Copeland Act Requirements.

The Contractor shall comply with the requirements of 29 CFR Part 3, which are incorporated by reference in this contract.

6. Subcontracts.

The Contractor or subcontractor shall insert in any subcontracts the clauses contained in 29 CFR Part 5.5(a)(1) through (10) and such other clauses as the Federal Aviation Administration may by appropriate instructions require, and also a clause requiring the subcontractors to include these clauses in any lower tier subcontracts. The prime contractor shall be responsible for the compliance by any subcontractor or lower tier subcontractor with all the contract clauses in 29 CFR Part 5.5.

7. Contract Termination: Debarment.

A breach of the contract clauses in paragraph 1 through 10 of this section may be grounds for termination of the contract, and for debarment as a contractor and a subcontractor as provided in 29 CFR 5.12.

8. Compliance with Davis-Bacon and Related Act Requirements.

All rulings and interpretations of the Davis-Bacon and Related Acts contained in 29 CFR Parts 1, 3, and 5 are herein incorporated by reference in this contract.

9. Disputes Concerning Labor Standards.

Disputes arising out of the labor standards provisions of this contract shall not be subject to the general disputes clause of this contract. Such disputes shall be resolved in accordance with the procedures of the Department of Labor set forth in 29 CFR Parts 5, 6, and 7. Disputes within the meaning of this clause include disputes between the Contractor (or any of its subcontractors) and the contracting agency, the U.S. Department of Labor, or the employees or their representatives.

10. Certification of Eligibility.

(i) By entering into this contract, the Contractor certifies that neither it (nor he or she) nor any person or firm who has an interest in the Contractor's firm is a person or firm ineligible to be awarded Government contracts by virtue of section 3(a) of the Davis-Bacon Act or 29 CFR 5.12(a)(1).

(ii) No part of this contract shall be subcontracted to any person or firm ineligible for award of a Government contract by virtue of section 3(a) of the Davis-Bacon Act or 29 CFR 5.12(a)(1).

(iii) The penalty for making false statements is prescribed in the U.S. Criminal Code, 18 USC 1001.

A11 DEBARMENT AND SUSPENSION

A11.1 SOURCE

2 CFR part 180 (Subpart C)

2 CFR part 1200

DOT Order 4200.5

A11.2 APPLICABILITY

The sponsor must verify that the firm or individual that it is entering into a contract with is not presently suspended, excluded, or debarred by any Federal department or agency from participating in federally assisted projects. The sponsor accomplishes this by:

1) Checking the System for Award Management (SAM.gov) to verify that the firm or individual is not listed in SAM.gov as being suspended, debarred, or excluded;
2) Collecting a certification from the firm or individual that it is not suspended, debarred, or excluded; and
3) Incorporating a clause in the contract that requires lower tier contracts to verify that no suspended, debarred, or excluded firm or individual is included in the project.

Contract Types – This requirement applies to *covered transactions*, which are defined in 2 CFR part 180. AIP funded contracts are non-procurement transactions, as defined by §180.970. Covered transactions include any AIP-funded contract, regardless of tier, that is awarded by a contractor, subcontractor, supplier, consultant, or its agent or representative in any transaction, if the amount of the contract is expected to equal or exceed $25,000. This includes contracts associated with land acquisition projects.

Use of Provision – No mandatory language provided. The following language is acceptable to the FAA in meeting the intent of this requirement. If the sponsor uses different language, the sponsor's language must fully satisfy the requirements of 2 CFR part 180. For professional service agreements, sponsor may substitute bidder/offeror with consultant.

A11.3 SOLICITATION CLAUSE

A11.3.1 Bidder or Offeror Certification

CERTIFICATION OF OFFERER/BIDDER REGARDING DEBARMENT

By submitting a bid/proposal under this solicitation, the bidder or offeror certifies that neither it nor its principals are presently debarred or suspended by any Federal department or agency from participation in this transaction.

A11.3.2 Lower Tier Contract Certification

CERTIFICATION OF LOWER TIER CONTRACTORS REGARDING DEBARMENT

The successful bidder, by administering each lower tier subcontract that exceeds $25,000 as a "covered transaction", must verify each lower tier participant of a "covered transaction" under the project is not presently debarred or otherwise disqualified from participation in this federally assisted project. The successful bidder will accomplish this by:

1. Checking the System for Award Management at website: http://www.sam.gov.
2. Collecting a certification statement similar to the Certification of Offerer /Bidder Regarding Debarment, above.
3. Inserting a clause or condition in the covered transaction with the lower tier contract.

If the Federal Aviation Administration later determines that a lower tier participant failed to disclose to a higher tier participant that it was excluded or disqualified at the time it entered the covered transaction, the FAA may pursue any available remedies, including suspension and debarment of the non-compliant participant.

A12 DISADVANTAGED BUSINESS ENTERPRISE

A12.1 SOURCE

49 CFR part 26

A12.2 APPLICABILITY

A sponsor that anticipates awarding $250,000 or more in AIP funded prime contracts in a federal fiscal year must have an approved Disadvantaged Business Enterprise (DBE) program on file with the FAA Office of Civil Rights (§ 26.21). The approved DBE program will identify a 3-year overall program goal that the sponsor bases on the availability of ready, willing, and able DBEs relative to all businesses ready, willing, and able to participate on the project (§ 26.45).

Contract Types – Sponsors with a DBE program on file with the FAA must include the three following provisions, if applicable:

1) Clause in all solicitations for proposals for which a contract goal has been established,
2) Clause in each prime contract, and
3) Clause in solicitations that are obtaining DBE participation through race/gender neutral means.

Use of Provision –

1. *Solicitations with a DBE Project Goal* – No mandatory language provided. 49 CFR §26.53 requires a sponsor's solicitation to address what a contractor must submit on proposed DBE participation. The language of A12.3.1 is acceptable to the FAA in meeting the intent of this requirement. If the sponsor uses different language, the sponsor's revised language must fully satisfy these requirements. The sponsor may require the contractor's submittal on proposed DBE participation either at bid opening as a matter of responsiveness or within five days of bid opening as a matter of responsibility.

2. *Solicitations Relying on Race-gender Neutral Means* – No mandatory language provided. The language of A12.3.2 is acceptable to the FAA in meeting the intent of this requirement. If the sponsor uses different language, the sponsor's revised language must fully satisfy requirements for a sponsor that is not applying a project specific contract goal but is covered by a DBE program on file with the FAA.

3. *Contracts Covered by DBE Program* – **MANDATORY TEXT PROVIDED**. Sponsors must incorporate this language if they have a DBE program on file with the FAA. This includes projects where DBE participation is obtained through race-gender neutral means (i.e. no project goal). Sections §26.13 and §26.29 establish mandatory language for contractor assurance and prompt payment. The sponsor must not modify the language.

4. Sponsors that are not required to have a DBE program on file with the FAA are not required to include DBE provisions and clauses.

A12.3 REQUIRED PROVISIONS

A12.3.1 Solicitation Language (Solicitations that include a Project Goal)

Information Submitted as a matter of bidder responsiveness:

The Owner's award of this contract is conditioned upon Bidder or Offeror satisfying the good faith effort requirements of 49 CFR §26.53.

As a condition of bid responsiveness, the Bidder or Offeror must submit the following information with its proposal on the forms provided herein:

1) The names and addresses of Disadvantaged Business Enterprise (DBE) firms that will participate in the contract;
2) A description of the work that each DBE firm will perform;
3) The dollar amount of the participation of each DBE firm listed under (1)
4) Written statement from Bidder or Offeror that attests their commitment to use the DBE firm(s) listed under (1) to meet the Owner's project goal; and
5) If Bidder or Offeror cannot meet the advertised project DBE goal, evidence of good faith efforts undertaken by the Bidder or Offeror as described in appendix A to 49 CFR part 26.

Information submitted as a matter of bidder responsibility:

The Owner's award of this contract is conditioned upon Bidder or Offeror satisfying the good faith effort requirements of 49 CFR §26.53.

The successful Bidder or Offeror must provide written confirmation of participation from each of the DBE firms the Bidder or Offeror lists in its commitment within five days after bid opening.

1) The names and addresses of Disadvantaged Business Enterprise (DBE) firms that will participate in the contract;
2) A description of the work that each DBE firm will perform;
3) The dollar amount of the participation of each DBE firm listed under (1)
4) Written statement from Bidder or Offeror that attests their commitment to use the DBE firm(s) listed under (1) to meet the Owner's project goal; and
5) If Bidder or Offeror cannot meet the advertised project DBE goal, evidence of good faith efforts undertaken by the Bidder or Offeror as described in appendix A to 49 CFR part 26.

A12.3.2 Solicitation Language (Race/Gender Neutral Means)

The requirements of 49 CFR part 26 apply to this contract. It is the policy of the [Insert Name of Owner] to practice nondiscrimination based on race, color, sex, or national origin in the award or performance of this contract. The Owner encourages participation by all firms qualifying under this solicitation regardless of business size or ownership.

A12.3.3 Prime Contracts (Projects Covered by a DBE Program)

DISADVANTAGED BUSINESS ENTERPRISES

Contract Assurance (§ 26.13) –

The Contractor or subcontractor shall not discriminate on the basis of race, color, national origin, or sex in the performance of this contract. The Contractor shall carry out applicable requirements of 49 CFR part 26 in the award and administration of Department of Transportation-assisted contracts. Failure by the Contractor to carry out these requirements is a material breach of this contract, which may result in the termination of this contract or such other remedy as the Owner deems appropriate, which may include, but is not limited to:

1) Withholding monthly progress payments;
2) Assessing sanctions;
3) Liquidated damages; and/or
4) Disqualifying the Contractor from future bidding as non-responsible.

Prompt Payment (§26.29) – The prime contractor agrees to pay each subcontractor under this prime contract for satisfactory performance of its contract no later than **10** days from the receipt of each payment the prime contractor receives from **Owner**. The prime contractor agrees further to return retainage payments to each subcontractor within **10** days after the subcontractor's work is satisfactorily completed. Any delay or postponement of payment from the above referenced time frame may occur only for good cause following written approval of the **Subcontractor**. This clause applies to both DBE and non-DBE subcontractors.

A13 DISTRACTED DRIVING

A13.1 SOURCE

Executive Order 13513

DOT Order 3902.10

A13.2 APPLICABILITY

The FAA encourages recipients of Federal grant funds to adopt and enforce safety policies that decrease crashes by distracted drivers, including policies to ban text messaging while driving when performing work related to a grant or subgrant.

Contract Types – Sponsors must insert this provision in all AIP funded contracts that exceed the micro-purchase threshold of 2 CFR §200.67 (currently set at $3,500).

Use of Provision – No mandatory text provided. The following language is acceptable to the FAA in meeting the intent of this requirement. If the sponsor uses different language, the sponsor's revised language must fully satisfy these requirements.

A13.3 CONTRACT CLAUSE

TEXTING WHEN DRIVING

In accordance with Executive Order 13513, "Federal Leadership on Reducing Text Messaging While Driving", (10/1/2009) and DOT Order 3902.10, "Text Messaging While Driving", (12/30/2009), the Federal Aviation Administration encourages recipients of Federal grant funds to adopt and enforce safety policies that decrease crashes by distracted drivers, including policies to ban text messaging while driving when performing work related to a grant or subgrant.

In support of this initiative, the Owner encourages the Contractor to promote policies and initiatives for its employees and other work personnel that decrease crashes by distracted drivers, including policies that ban text messaging while driving motor vehicles while performing work activities associated with the project. The Contractor must include the substance of this clause in all sub-tier contracts exceeding $3,500 that involve driving a motor vehicle in performance of work activities associated with the project.

A14 ENERGY CONSERVATION REQUIREMENTS

A14.1 SOURCE

2 CFR § 200, Appendix II(H)

A14.2 APPLICABILITY

The Energy Conservation Requirements of 2 CFR § 200 Appendix II(H) requires this provision on energy efficiency.

Contract Types – The sponsor must include this provision in all AIP funded contracts and lower-tier contracts.

Use of Provision – No mandatory text provided. The following language is acceptable to the FAA and meets the intent of this requirement. If the sponsor uses different language, the sponsor's revised language must fully satisfy these requirements. Sponsor may substitute "Contractor and subcontractor" with "Consultant and sub-consultant" for professional service agreements.

A14.3 CONTRACT CLAUSE

ENERGY CONSERVATION REQUIREMENTS

Contractor and Subcontractor agree to comply with mandatory standards and policies relating to energy efficiency as contained in the state energy conservation plan issued in compliance with the Energy Policy and Conservation Act (42 USC 6201*et seq*).

A15 DRUG FREE WORKPLACE REQUIREMENTS

A15.1 SOURCE

49 CFR part 32

Drug-Free Workplace Act of 1988 (41 U.S.C. 701 *et seq.,* as amended)

A15.2 APPLICABILITY

The Drug-Free Workplace Act of 1988 requires some Federal contractors and *all* Federal grantees to agree that they will provide drug-free workplaces as a condition of receiving a contract or grant from a Federal agency. The Act does ***not*** apply to contractors, subcontractors, or subgrantees, although the Federal grantees workplace may be where the contractors, subcontractors, or subgrantees are working.

Contract Types – This provision applies to all AIP funded projects, but not to the contracts between the grantee (the sponsor) and a contractor, subcontractors, suppliers, or subgrantees.

Use of Provision – No mandatory or recommended text provided because the requirements do not extend beyond the sponsor level.

A15.3 CONTRACT CLAUSE

None.

A16 EQUAL EMPLOYEMENT OPPORTUNITY (EEO)

A16.1 SOURCE

2 CFR 200, Appendix II(C)

41 CFR § 60-1.4

41 CFR § 60-4.3

Executive Order 11246

A16.2 APPLICABILITY

The purpose of this provision is to provide equal opportunity for all persons, without regard to race, color, religion, sex, or national origin who are employed or seeking employment with contractors performing under a federally assisted construction contract. There are two provisions — a construction clause and a specification clause.

The equal opportunity contract clause must be included in any contract or subcontract when the amount exceeds $10,000. Once the equal opportunity clause is determined to be applicable, the contract or subcontract must include the clause for the remainder of the year, regardless of the amount or the contract.

Contract Types –

Construction – The sponsor must incorporate contract and specification language in all construction contracts and subcontracts as required above.

Equipment – The sponsor must incorporate contract and specification language into all equipment contracts as required above that involves installation of equipment onsite (e.g. electrical vault equipment). This provision does not apply to equipment acquisition projects where the manufacture of the equipment takes place offsite at the vendor plant (e.g. ARFF and SRE vehicles).

Professional Services – The sponsor must include contract and specification language into all professional service agreements as required above.

Property – The sponsor must include contract and specification language into all land acquisition projects that include work that qualifies as construction work as defined by 41 CFR part 60 as required above. An example is installation of boundary fencing.

Use of Provision – **MANDATORY TEXT.** 41 CFR § 60-1.4 provides the mandatory ***contract*** language. 41 CFR § 60-4.3 provides the mandatory ***specification*** language. The sponsor must incorporate these clauses without modification.

A16.3 MANDATORY CONTRACT CLAUSE

A16.3.1 EEO Contract Clause

EQUAL OPPORTUNITY CLAUSE

During the performance of this contract, the Contractor agrees as follows:

(1) The Contractor will not discriminate against any employee or applicant for employment because of race, color, religion, sex, or national origin. The Contractor will take affirmative action to ensure that applicants are employed, and that employees are treated during employment, without regard to their race, color, religion, sex, sexual orientation, gender identify, or national origin. Such action shall include, but not be limited to, the following: employment, upgrading, demotion, or transfer; recruitment or recruitment advertising; layoff, or termination; rates of pay or other forms of compensation; and selection for training, including apprenticeship. The Contractor agrees to post in conspicuous places, available to employees and applicants for employment, notices to be provided setting forth the provisions of this nondiscrimination clause.

(2) The Contractor will, in all solicitations or advertisements for employees placed by or on behalf of the Contractor, state that all qualified applicants will receive considerations for employment without regard to race, color, religion, sex, or national origin.

(3) The Contractor will send to each labor union or representative of workers with which it has a collective bargaining agreement or other contract or understanding, a notice to be provided advising the said labor union or workers' representatives of the Contractor's commitments under this section and shall post copies of the notice in conspicuous places available to employees and applicants for employment.

(4) The Contractor will comply with all provisions of Executive Order 11246 of September 24, 1965, and of the rules, regulations, and relevant orders of the Secretary of Labor.

(5) The Contractor will furnish all information and reports required by Executive Order 11246 of September 24, 1965, and by rules, regulations, and orders of the Secretary of Labor, or pursuant thereto, and will permit access to his books, records, and accounts by the administering agency and the Secretary of Labor for purposes of investigation to ascertain compliance with such rules, regulations, and orders.

(6) In the event of the Contractor's noncompliance with the nondiscrimination clauses of this contract or with any of the said rules, regulations, or orders, this contract may be canceled, terminated, or suspended in whole or in part and the Contractor may be declared ineligible for further Government contracts or federally assisted construction contracts in accordance with procedures authorized in Executive Order 11246 of September 24, 1965, and such other sanctions may be imposed and remedies invoked as provided in Executive Order 11246 of September 24, 1965, or by rule, regulation, or order of the Secretary of Labor, or as otherwise provided by law.

(7) The Contractor will include the portion of the sentence immediately preceding paragraph (1) and the provisions of paragraphs (1) through (7) in every subcontract or purchase order unless exempted by rules, regulations, or orders of the Secretary of Labor issued pursuant to section 204 of Executive Order 11246 of September 24, 1965, so that such provisions will be binding upon each subcontractor or vendor. The Contractor will take such action with respect to any subcontract or purchase order as the

administering agency may direct as a means of enforcing such provisions, including sanctions for noncompliance*: Provided, however,* that in the event a contractor becomes involved in, or is threatened with, litigation with a subcontractor or vendor as a result of such direction by the administering agency the Contractor may request the United States to enter into such litigation to protect the interests of the United States.

A16.3.2 EEO Specification

STANDARD FEDERAL EQUAL EMPLOYMENT OPPORTUNITY CONSTRUCTION CONTRACT SPECIFICATIONS

1. As used in these specifications:

a. "Covered area" means the geographical area described in the solicitation from which this contract resulted;

b. "Director" means Director, Office of Federal Contract Compliance Programs (OFCCP), U.S. Department of Labor, or any person to whom the Director delegates authority;

c. "Employer identification number" means the Federal social security number used on the Employer's Quarterly Federal Tax Return, U.S. Treasury Department Form 941;

d. "Minority" includes:

(1) Black (all persons having origins in any of the Black African racial groups not of Hispanic origin);

(2) Hispanic (all persons of Mexican, Puerto Rican, Cuban, Central or South American, or other Spanish culture or origin regardless of race);

(3) Asian and Pacific Islander (all persons having origins in any of the original peoples of the Far East, Southeast Asia, the Indian Subcontinent, or the Pacific Islands); and

(4) American Indian or Alaskan native (all persons having origins in any of the original peoples of North America and maintaining identifiable tribal affiliations through membership and participation or community identification).

2. Whenever the Contractor, or any subcontractor at any tier, subcontracts a portion of the work involving any construction trade, it shall physically include in each subcontract in excess of $10,000 the provisions of these specifications and the Notice which contains the applicable goals for minority and female participation and which is set forth in the solicitations from which this contract resulted.

3. If the Contractor is participating (pursuant to 41 CFR part 60-4.5) in a Hometown Plan approved by the U.S. Department of Labor in the covered area either individually or through an association, its affirmative action obligations on all work in the Plan area (including goals and timetables) shall be in accordance with that Plan for those trades which have unions participating in the Plan. Contractors shall be able to demonstrate their participation in and compliance with the provisions of any such Hometown Plan. Each contractor or subcontractor participating in an approved plan is individually required to comply with its obligations under the EEO clause and to make a good faith effort to achieve each goal under the Plan in each trade in which it has employees. The overall good faith performance by other contractors or subcontractors toward a goal in an approved Plan does not excuse any covered contractor's or subcontractor's failure to take good faith efforts to achieve the Plan goals and timetables.

4. The Contractor shall implement the specific affirmative action standards provided in paragraphs 7a through 7p of these specifications. The goals set forth in the solicitation from which this contract resulted are expressed as percentages of the total hours of employment and training of minority and female utilization the Contractor should reasonably be able to achieve in each construction trade in which it has employees in the covered area. Covered construction contractors performing construction work in a geographical area where they do not have a Federal or federally assisted construction contract shall apply the minority and female goals established for the geographical area where the work is being performed. Goals are published periodically in the Federal Register in notice form, and such notices may be obtained from any Office of Federal Contract Compliance Programs office or from Federal procurement contracting officers. The Contractor is expected to make substantially uniform progress in meeting its goals in each craft during the period specified.

5. Neither the provisions of any collective bargaining agreement nor the failure by a union with whom the Contractor has a collective bargaining agreement to refer either minorities or women shall excuse the Contractor's obligations under these specifications, Executive Order 11246, or the regulations promulgated pursuant thereto.

6. In order for the non-working training hours of apprentices and trainees to be counted in meeting the goals, such apprentices and trainees shall be employed by the Contractor during the training period and the Contractor shall have made a commitment to employ the apprentices and trainees at the completion of their training, subject to the availability of employment opportunities. Trainees shall be trained pursuant to training programs approved by the U.S. Department of Labor.

7. The Contractor shall take specific affirmative actions to ensure equal employment opportunity. The evaluation of the Contractor's compliance with these specifications shall be based upon its effort to achieve maximum results from its actions. The Contractor shall document these efforts fully and shall implement affirmative action steps at least as extensive as the following:

a. Ensure and maintain a working environment free of harassment, intimidation, and coercion at all sites, and in all facilities at which the Contractor's employees are assigned to work. The Contractor, where possible, will assign two or more women to each construction project. The Contractor shall specifically ensure that all foremen, superintendents, and other onsite supervisory personnel are aware of and carry out the Contractor's obligation to maintain such a working environment, with specific attention to minority or female individuals working at such sites or in such facilities.

b. Establish and maintain a current list of minority and female recruitment sources, provide written notification to minority and female recruitment sources and to community organizations when the Contractor or its unions have employment opportunities available, and maintain a record of the organizations' responses.

c. Maintain a current file of the names, addresses, and telephone numbers of each minority and female off-the-street applicant and minority or female referral from a union, a recruitment source, or community organization and of what action was taken with respect to each such individual. If such individual was sent to the union hiring hall for referral and was not referred back to the Contractor by the union or, if referred, not employed by the Contractor, this shall be documented in the file with the reason therefore along with whatever additional actions the Contractor may have taken.

d. Provide immediate written notification to the Director when the union or unions with which the Contractor has a collective bargaining agreement has not referred to the Contractor a minority person or female sent by the Contractor, or when the Contractor has other information that the union referral process has impeded the Contractor's efforts to meet its obligations.

e. Develop on-the-job training opportunities and/or participate in training programs for the area which expressly include minorities and women, including upgrading programs and apprenticeship and trainee programs relevant to the Contractor's employment needs, especially those programs funded or approved by the Department of Labor. The Contractor shall provide notice of these programs to the sources compiled under 7b above.

f. Disseminate the Contractor's EEO policy by providing notice of the policy to unions and training programs and requesting their cooperation in assisting the Contractor in meeting its EEO obligations; by including it in any policy manual and collective bargaining agreement; by publicizing it in the company newspaper, annual report, etc.; by specific review of the policy with all management personnel and with all minority and female employees at least once a year; and by posting the company EEO policy on bulletin boards accessible to all employees at each location where construction work is performed.

g. Review, at least annually, the company's EEO policy and affirmative action obligations under these specifications with all employees having any responsibility for hiring, assignment, layoff, termination, or other employment decisions, including specific review of these items, with onsite supervisory personnel such superintendents, general foremen, etc., prior to the initiation of construction work at any job site. A written record shall be made and maintained identifying the time and place of these meetings, persons attending, subject matter discussed, and disposition of the subject matter.

h. Disseminate the Contractor's EEO policy externally by including it in any advertising in the news media, specifically including minority and female news media, and providing written notification to and discussing the Contractor's EEO policy with other contractors and subcontractors with whom the Contractor does or anticipates doing business.

i. Direct its recruitment efforts, both oral and written, to minority, female, and community organizations, to schools with minority and female students; and to minority and female recruitment and training organizations serving the Contractor's recruitment area and employment needs. Not later than one month prior to the date for the acceptance of applications for apprenticeship or other training by any recruitment source, the Contractor shall send written notification to organizations, such as the above, describing the openings, screening procedures, and tests to be used in the selection process.

j. Encourage present minority and female employees to recruit other minority persons and women and, where reasonable, provide after school, summer, and vacation employment to minority and female youth both on the site and in other areas of a contractor's workforce.

k. Validate all tests and other selection requirements where there is an obligation to do so under 41 CFR part 60-3.

l. Conduct, at least annually, an inventory and evaluation at least of all minority and female personnel, for promotional opportunities and encourage these employees to seek or to prepare for, through appropriate training, etc., such opportunities.

m. Ensure that seniority practices, job classifications, work assignments, and other personnel practices do not have a discriminatory effect by continually monitoring all personnel and employment related activities to ensure that the EEO policy and the Contractor's obligations under these specifications are being carried out.

n. Ensure that all facilities and company activities are non-segregated except that separate or single user toilet and necessary changing facilities shall be provided to assure privacy between the sexes.

o. Document and maintain a record of all solicitations of offers for subcontracts from minority and female construction contractors and suppliers, including circulation of solicitations to minority and female contractor associations and other business associations.

p. Conduct a review, at least annually, of all supervisor's adherence to and performance under the Contractor's EEO policies and affirmative action obligations.

8. Contractors are encouraged to participate in voluntary associations, which assist in fulfilling one or more of their affirmative action obligations (7a through 7p). The efforts of a contractor association, joint contractor union, contractor community, or other similar groups of which the Contractor is a member and participant may be asserted as fulfilling any one or more of its obligations under 7a through 7p of these specifications provided that the Contractor actively participates in the group, makes every effort to assure that the group has a positive impact on the employment of minorities and women in the industry, ensures that the concrete benefits of the program are reflected in the Contractor's minority and female workforce participation, makes a good faith effort to meet its individual goals and timetables, and can provide access to documentation which demonstrates the effectiveness of actions taken on behalf of the Contractor. The obligation to comply, however, is the Contractor's and failure of such a group to fulfill an obligation shall not be a defense for the Contractor's noncompliance.

9. A single goal for minorities and a separate single goal for women have been established. The Contractor, however, is required to provide equal employment opportunity and to take affirmative action for all minority groups, both male and female, and all women, both minority and non-minority. Consequently, if the particular group is employed in a substantially disparate manner (for example, even though the Contractor has achieved its goals for women generally), the Contractor may be in violation of the Executive Order if a specific minority group of women is underutilized.

10. The Contractor shall not use the goals and timetables or affirmative action standards to discriminate against any person because of race, color, religion, sex, or national origin.

11. The Contractor shall not enter into any subcontract with any person or firm debarred from Government contracts pursuant to Executive Order 11246.

12. The Contractor shall carry out such sanctions and penalties for violation of these specifications and of the Equal Opportunity Clause, including suspension, termination, and cancellation of existing subcontracts as may be imposed or ordered pursuant to Executive Order 11246, as amended, and its implementing regulations, by the Office of Federal Contract Compliance Programs. Any contractor who

fails to carry out such sanctions and penalties shall be in violation of these specifications and Executive Order 11246, as amended.

13. The Contractor, in fulfilling its obligations under these specifications, shall implement specific affirmative action steps, at least as extensive as those standards prescribed in paragraph 7 of these specifications, so as to achieve maximum results from its efforts to ensure equal employment opportunity. If the Contractor fails to comply with the requirements of the Executive Order, the implementing regulations, or these specifications, the Director shall proceed in accordance with 41 CFR part 60-4.8.

14. The Contractor shall designate a responsible official to monitor all employment related activity to ensure that the company EEO policy is being carried out, to submit reports relating to the provisions hereof as may be required by the Government, and to keep records. Records shall at least include for each employee, the name, address, telephone number, construction trade, union affiliation if any, employee identification number when assigned, social security number, race, sex, status (e.g., mechanic, apprentice, trainee, helper, or laborer), dates of changes in status, hours worked per week in the indicated trade, rate of pay, and locations at which the work was performed. Records shall be maintained in an easily understandable and retrievable form; however, to the degree that existing records satisfy this requirement, contractors shall not be required to maintain separate records.

15. Nothing herein provided shall be construed as a limitation upon the application of other laws which establish different standards of compliance or upon the application of requirements for the hiring of local or other area residents (e.g. those under the Public Works Employment Act of 1977 and the Community Development Block Grant Program).

A17 FEDERAL FAIR LABOR STANDARDS ACT (FEDERAL MINIMUM WAGE)

A17.1 SOURCE

29 USC § 201, et seq

A17.2 APPLICABILITY

The U.S. Department of Labor (DOL) Wage and Hour Division administers the Fair Labor Standards Act (FLSA). This act prescribes federal standards for basic minimum wage, overtime pay, record keeping, and child labor standards.

Contract Types – Per the Department of Labor, all employees of certain enterprises having workers engaged in interstate commerce; producing goods for interstate commerce; or handling, selling, or otherwise working on goods or materials that have been moved in or produced for such commerce by any person are covered by the FLSA.

All consultants, sub-consultants, contractors, and subcontractors employed under this federally assisted project must comply with the FLSA.

> *Professional Services* – 29 CFR § 213 exempts employees in a bona fide executive, administrative or professional capacity. Because professional firms employ individuals that are not covered by this exemption, the sponsor's agreement with a professional services firm must include the FLSA provision.

Use of Provision – No mandatory text provided. The following language is acceptable to the FAA and meets the intent of this requirement. If the sponsor uses different language, the sponsor's language must fully satisfy the requirements of 29 USC § 201.The sponsor must select *contractor* or *consultant*, as appropriate for the contract.

A17.3 SOLICITATION CLAUSE

All contracts and subcontracts that result from this solicitation incorporate by reference the provisions of 29 CFR part 201, the Federal Fair Labor Standards Act (FLSA), with the same force and effect as if given in full text. The FLSA sets minimum wage, overtime pay, recordkeeping, and child labor standards for full and part-time workers.

The [*Contractor* | *Consultant*] has full responsibility to monitor compliance to the referenced statute or regulation. The [*Contractor* | *Consultant*] must address any claims or disputes that arise from this requirement directly with the U.S. Department of Labor – Wage and Hour Division.

A18 LOBBYING AND INFLUENCING FEDERAL EMPLOYEES

A18.1 SOURCE

31 USC § 1352 – Byrd Anti-Lobbying Amendment

2 CFR part 200, Appendix II(J)

49 CFR part 20, Appendix A

A18.2 APPLICABILITY

Consultants and contractors that apply or bid for an award of $100,000 or more must certify that it will not and has not used Federal appropriated funds to pay any person or organization for influencing or attempting to influence an officer or employee of any agency, a member of Congress, officer or employee of Congress, or an employee of a member of Congress in connection with obtaining any Federal contract, grant, or another award covered by 31 USC 1352. Each tier must also disclose any lobbying with non-Federal funds that takes place in connection with obtaining any Federal award.

Contract Types – The sponsor must incorporate this provision into all contracts exceeding $100,000.

Use of Provision – **MANDATORY TEXT.** Appendix A to 49 CFR Part 20 prescribes language the sponsor must use. The sponsor must incorporate this provision without modification.

A18.3 CONTRACT CLAUSE

CERTIFICATION REGARDING LOBBYING

The Bidder or Offeror certifies by signing and submitting this bid or proposal, to the best of his or her knowledge and belief, that:

(1) No Federal appropriated funds have been paid or will be paid, by or on behalf of the Bidder or Offeror, to any person for influencing or attempting to influence an officer or employee of an agency, a Member of Congress, an officer or employee of Congress, or an employee of a Member of Congress in connection with the awarding of any Federal contract, the making of any Federal grant, the making of any Federal loan, the entering into of any cooperative agreement, and the extension, continuation, renewal, amendment, or modification of any Federal contract, grant, loan, or cooperative agreement.

(2) If any funds other than Federal appropriated funds have been paid or will be paid to any person for influencing or attempting to influence an officer or employee of any agency, a Member of Congress, an officer or employee of Congress, or an employee of a Member of Congress in connection with this Federal contract, grant, loan, or cooperative agreement, the undersigned shall complete and submit Standard Form-LLL, "Disclosure Form to Report Lobbying," in accordance with its instructions.

(3) The undersigned shall require that the language of this certification be included in the award documents for all sub-awards at all tiers (including subcontracts, subgrants, and contracts under grants, loans, and cooperative agreements) and that all sub-recipients shall certify and disclose accordingly.

This certification is a material representation of fact upon which reliance was placed when this transaction was made or entered into. Submission of this certification is a prerequisite for making or entering into this transaction imposed by section 1352, title 31, U.S. Code. Any person who fails to file the required certification shall be subject to a civil penalty of not less than $10,000 and not more than $100,000 for each such failure.

A19 PROHIBITION of SEGREGATED FACILITIES

A19.1 SOURCE

41 CFR § 60

A19.2 APPLICABILITY

The contractor must comply with the requirements of the EEO clause by ensuring that facilities they provide for employees are free of segregation on the basis of race, color, religion, sex, sexual orientation, gender identity, or national origin. This clause must be included in all contracts that include the equal opportunity clause, regardless of the amount of the contract.

Contract Types – AIP sponsors must incorporate the Prohibition of Segregated Facilities clause in any contract containing the Equal Employment Opportunity clause of 41 CFR §60.1. This obligation flows down to subcontract and sub-tier purchase orders containing the Equal Employment Opportunity clause.

Construction – Construction work means construction, rehabilitation, alteration, conversion, extension, demolition or repair of buildings, highways, or other changes or improvements to real property, including facilities providing utility services. The term also includes the supervision, inspection, and other onsite functions incidental to the actual construction.

Equipment – On site installation of equipment such as airfield lighting control equipment meets the definition of construction and thus this provision would apply. This provision does not apply to equipment projects involving manufacture of the item at a vendor's manufacturing plant. An example would be the manufacture of a SRE or ARFF vehicle.

Professional Services – Professional services that include tasks that qualify as construction work as defined by 41 CFR part 60. Examples include the installation of noise monitoring equipment.

Property/Land – Land acquisition contracts that include tasks that qualify as construction work as defined by 41 CFR part 60. Examples include demolition of structures or installation of boundary fencing.

Use of Provision – No mandatory text provided. The following language is acceptable to the FAA and meets the intent of this requirement. If the sponsor uses different language, the sponsor's language must fully satisfy the requirements of 41 CFR § 60.

A19.3 CONTRACT CLAUSE

PROHIBITION OF SEGREGATED FACILITIES

(a) The Contractor agrees that it does not and will not maintain or provide for its employees any segregated facilities at any of its establishments, and that it does not and will not permit its employees to perform their services at any location under its control where segregated facilities are maintained. The Contractor agrees that a breach of this clause is a violation of the Equal Employment Opportunity clause in this contract.

(b) “Segregated facilities,” as used in this clause, means any waiting rooms, work areas, rest rooms and wash rooms, restaurants and other eating areas, time clocks, locker rooms and other storage or dressing areas, parking lots, drinking fountains, recreation or entertainment areas, transportation, and housing facilities provided for employees that are segregated by explicit directive or are in fact segregated on the basis of race, color, religion, sex, or national origin because of written or oral policies or employee custom. The term does not include separate or single-user rest rooms or necessary dressing or sleeping areas provided to assure privacy between the sexes.

(c) The Contractor shall include this clause in every subcontract and purchase order that is subject to the Equal Employment Opportunity clause of this contract.

A20 OCCUPATIONAL SAFETY AND HEALTH ACT OF 1970

A20.1 SOURCE

29 CFR part 1910

A20.2 APPLICABILITY

Contract Types – All contracts and subcontracts must comply with the Occupational Safety and Health Act of 1970 (OSH). The U.S. Department of Labor Occupational Safety and Health Administration (OSHA) oversees the workplace health and safety standards wage provisions from OSH.

Use of Provision – No mandatory text provided. The following language is acceptable to the FAA and meets the intent of this requirement. If the sponsor uses different language, the sponsor's language must fully satisfy the requirements of 20 CFR part 1910.

A20.3 CONTRACT CLAUSE

All contracts and subcontracts that result from this solicitation incorporate by reference the requirements of 29 CFR Part 1910 with the same force and effect as if given in full text. The employer must provide a work environment that is free from recognized hazards that may cause death or serious physical harm to the employee. The employer retains full responsibility to monitor its compliance and their subcontractor's compliance with the applicable requirements of the Occupational Safety and Health Act of 1970 (20 CFR Part 1910). The employer must address any claims or disputes that pertain to a referenced requirement directly with the U.S. Department of Labor – Occupational Safety and Health Administration.

A21 PROCUREMENT OF RECOVERED MATERIALS

A21.1 SOURCE

2 CFR § 200.322

40 CFR part 247

Solid Waste Disposal Act

A21.2 APPLICABILITY

Sponsors of AIP funded development and equipment projects must comply with Section 6002 of the Solid Waste Disposal Act, as amended by the Resource Conservation and Recovery Act. Section 6002 emphasizes maximizing energy and resource recovery through use of affirmative procurement actions for recovered materials identified in the Environmental Protection Agency (EPA) guidelines codified at 40 CFR part 247. When acquiring items designated in the guidelines, the sponsor must procure items that contain the highest percentage of recovered materials practicable, consistent with maintaining a satisfactory level of competition.

Contract Types – This provision applies to any contracts that include procurement of products designated in subpart B of 40 CFR part 247 where the purchase price of the item exceeds $10,000 or the value of the quantity acquired by the preceding fiscal year exceeded $10,000.

Construction and Equipment – Include this provision in all construction and equipment projects.

Professional Services and Property – Include this provision if the agreement includes procurement of a product that exceeds $10,000.

Use of Provision – No mandatory text provided. The following language is acceptable to the FAA and meets the intent of this requirement. If the sponsor uses different language, the sponsor's language must fully satisfy the requirements of 2 CFR § 200.

A21.3 CONTRACT CLAUSE

PROCUREMENT OF RECOVERED MATERIALS

Contractor and subcontractor agree to comply with Section 6002 of the Solid Waste Disposal Act, as amended by the Resource Conservation and Recovery Act, and the regulatory provisions of 40 CFR Part 247. In the performance of this contract and to the extent practicable, the Contractor and subcontractors are to use products containing the highest percentage of recovered materials for items designated by the Environmental Protection Agency (EPA) under 40 CFR Part 247 whenever:

1) The contract requires procurement of $10,000 or more of a designated item during the fiscal year; or
2) The contractor has procured $10,000 or more of a designated item using Federal funding during the previous fiscal year.

The list of EPA-designated items is available at www.epa.gov/smm/comprehensive-procurement-guidelines-construction-products.

Section 6002(c) establishes exceptions to the preference for recovery of EPA-designated products if the contractor can demonstrate the item is:

a) Not reasonably available within a timeframe providing for compliance with the contract performance schedule;
b) Fails to meet reasonable contract performance requirements; or
c) Is only available at an unreasonable price.

A22 RIGHT TO INVENTIONS (OMITTED)

A23 SEISMIC SAFETY (OMITTED)

A24 TAX DELINQUENCY AND FELONY CONVICTIONS

A24.1 SOURCE

Sections 415 and 416 of Title IV, Division L of the Consolidated Appropriations Act, 2014 (Pub. L. 113-76), and similar provisions in subsequent appropriations acts.

DOT Order 4200.6 - Requirements for Procurement and Non-Procurement Regarding Tax Delinquency and Felony Convictions

A24.2 APPLICABILITY

The sponsor must ensure that no funding goes to any contractor who:

- Has been convicted of a Federal felony within the last 24 months; or
- Has any outstanding tax liability for which all judicial and administrative remedies have lapsed or been exhausted.

Contract Types – This provision applies to all contracts funded in whole or part with AIP.

Use of Provision – The following language is acceptable to the FAA and meets the intent of this requirement. If the sponsor uses different language, the sponsor's language must fully satisfy the requirements of DOT Order 4200.6.

A24.3 CONTRACT CLAUSE

CERTIFICATION OF OFFERER/BIDDER REGARDING TAX DELINQUENCY AND FELONY CONVICTIONS

The applicant must complete the following two certification statements. The applicant must indicate its current status as it relates to tax delinquency and felony conviction by inserting a checkmark (✓) in the space following the applicable response. The applicant agrees that, if awarded a contract resulting from this solicitation, it will incorporate this provision for certification in all lower tier subcontracts.

Certifications

1) The applicant represents that it is ( ) is not ( ) a corporation that has any unpaid Federal tax liability that has been assessed, for which all judicial and administrative remedies have been exhausted or have lapsed, and that is not being paid in a timely manner pursuant to an agreement with the authority responsible for collecting the tax liability.
2) The applicant represents that it is ( ) is not ( ) is not a corporation that was convicted of a criminal violation under any Federal law within the preceding 24 months.

Note

If an applicant responds in the affirmative to either of the above representations, the applicant is ineligible to receive an award unless the sponsor has received notification from the agency suspension and debarment official (SDO) that the SDO has considered suspension or debarment and determined that further action is not required to protect the Government's interests. The applicant therefore must provide information to the owner about its tax liability or conviction to the Owner, who will then notify

the FAA Airports District Office, which will then notify the agency's SDO to facilitate completion of the required considerations before award decisions are made.

Term Definitions

Felony conviction: Felony conviction means a conviction within the preceding twentyfour (24) months of a felony criminal violation under any Federal law and includes conviction of an offense defined in a section of the U.S. code that specifically classifies the offense as a felony and conviction of an offense that is classified as a felony under 18 U.S.C. § 3559.

Tax Delinquency: A tax delinquency is any unpaid Federal tax liability that has been assessed, for which all judicial and administrative remedies have been exhausted, or have lapsed, and that is not being paid in a timely manner pursuant to an agreement with the authority responsible for collecting the tax liability.

A25 TERMINATION OF CONTRACT

A25.1 SOURCE

2 CFR § 200 Appendix II(B)

FAA Advisory Circular 150/5370-10, Section 80-09

A25.2 APPLICABILITY

Contract Types – All contracts and subcontracts in excess of $10,000 must address *termination for cause* and *termination for convenience* by the sponsor. The provision must address the manner (i.e. notice, opportunity to cure, and effective date) by which the sponsor's contract will be affected and the basis for settlement (i.e. incurred expenses, completed work, profit, etc.).

Use of Provision –

Termination for Default – **MANDATORY TEXT.** Section 80-09 of FAA Advisory Circular 150/5370-10 establishes standard language for Termination for Default under a construction contract. The sponsor must not make any changes to this standard language.

Termination for Convenience – No mandatory text provided. The sponsor must include a clause for termination for convenience. The following language is acceptable to the FAA and meets the intent of this requirement. If the sponsor uses different language, the sponsor's language must fully satisfy the requirements of Appendix II to 2 CFR part 200.

Equipment, Professional Services, and Property – No mandatory text provided. The sponsor may use their established clause language provided that it adequately addresses the intent of Appendix II(B) to Part 200, which addresses termination for fault and for convenience.

A25.3 CONTRACT CLAUSE

A25.3.1 Termination for Convenience

TERMINATION FOR CONVENIENCE (CONSTRUCTION & EQUIPMENT CONTRACTS)

The Owner may terminate this contract in whole or in part at any time by providing written notice to the Contractor. Such action may be without cause and without prejudice to any other right or remedy of Owner. Upon receipt of a written notice of termination, except as explicitly directed by the Owner, the Contractor shall immediately proceed with the following obligations regardless of any delay in determining or adjusting amounts due under this clause:

1. Contractor must immediately discontinue work as specified in the written notice.
2. Terminate all subcontracts to the extent they relate to the work terminated under the notice.
3. Discontinue orders for materials and services except as directed by the written notice.
4. Deliver to the Owner all fabricated and partially fabricated parts, completed and partially completed work, supplies, equipment and materials acquired prior to termination of the work, and as directed in the written notice.
5. Complete performance of the work not terminated by the notice.

6. Take action as directed by the Owner to protect and preserve property and work related to this contract that Owner will take possession.

Owner agrees to pay Contractor for:

1) completed and acceptable work executed in accordance with the contract documents prior to the effective date of termination;

2) documented expenses sustained prior to the effective date of termination in performing work and furnishing labor, materials, or equipment as required by the contract documents in connection with uncompleted work;

3) reasonable and substantiated claims, costs, and damages incurred in settlement of terminated contracts with Subcontractors and Suppliers; and

4) reasonable and substantiated expenses to the Contractor directly attributable to Owner's termination action.

Owner will not pay Contractor for loss of anticipated profits or revenue or other economic loss arising out of or resulting from the Owner's termination action.

The rights and remedies this clause provides are in addition to any other rights and remedies provided by law or under this contract.

TERMINATION FOR CONVENIENCE (PROFESSIONAL SERVICES)

The Owner may, by written notice to the Consultant, terminate this Agreement for its convenience and without cause or default on the part of Consultant. Upon receipt of the notice of termination, except as explicitly directed by the Owner, the Contractor must immediately discontinue all services affected.

Upon termination of the Agreement, the Consultant must deliver to the Owner all data, surveys, models, drawings, specifications, reports, maps, photographs, estimates, summaries, and other documents and materials prepared by the Engineer under this contract, whether complete or partially complete.

Owner agrees to make just and equitable compensation to the Consultant for satisfactory work completed up through the date the Consultant receives the termination notice. Compensation will not include anticipated profit on non-performed services.

Owner further agrees to hold Consultant harmless for errors or omissions in documents that are incomplete as a result of the termination action under this clause.

A25.3.2 Termination for Default

TERMINATION FOR DEFAULT (CONSTRUCTION)

Section 80-09 of FAA Advisory Circular 150/5370-10 establishes conditions, rights, and remedies associated with Owner termination of this contract due to default of the Contractor.

TERMINATION FOR DEFAULT (EQUIPMENT)

The Owner may, by written notice of default to the Contractor, terminate all or part of this Contract if the Contractor:

1. Fails to commence the Work under the Contract within the time specified in the Notice- to-Proceed;

2. Fails to make adequate progress as to endanger performance of this Contract in accordance with its terms;
3. Fails to make delivery of the equipment within the time specified in the Contract, including any Owner approved extensions;
4. Fails to comply with material provisions of the Contract;
5. Submits certifications made under the Contract and as part of their proposal that include false or fraudulent statements; or
6. Becomes insolvent or declares bankruptcy.

If one or more of the stated events occur, the Owner will give notice in writing to the Contractor and Surety of its intent to terminate the contract for cause. At the Owner's discretion, the notice may allow the Contractor and Surety an opportunity to cure the breach or default.

If within [10] days of the receipt of notice, the Contractor or Surety fails to remedy the breach or default to the satisfaction of the Owner, the Owner has authority to acquire equipment by other procurement action. The Contractor will be liable to the Owner for any excess costs the Owner incurs for acquiring such similar equipment.

Payment for completed equipment delivered to and accepted by the Owner shall be at the Contract price. The Owner may withhold from amounts otherwise due the Contractor for such completed equipment, such sum as the Owner determines to be necessary to protect the Owner against loss because of Contractor default.

Owner will not terminate the Contractor's right to proceed with the Work under this clause if the delay in completing the work arises from unforeseeable causes beyond the control and without the fault or negligence of the Contractor. Examples of such acceptable causes include: acts of God, acts of the Owner, acts of another Contractor in the performance of a contract with the Owner, and severe weather events that substantially exceed normal conditions for the location.

If, after termination of the Contractor's right to proceed, the Owner determines that the Contractor was not in default, or that the delay was excusable, the rights and obligations of the parties will be the same as if the Owner issued the termination for the convenience the Owner.

The rights and remedies of the Owner in this clause are in addition to any other rights and remedies provided by law or under this contract.

TERMINATION FOR DEFAULT (PROFESSIONAL SERVICES)

Either party may terminate this Agreement for cause if the other party fails to fulfill its obligations that are essential to the completion of the work per the terms and conditions of the Agreement. The party initiating the termination action must allow the breaching party an opportunity to dispute or cure the breach.

The terminating party must provide the breaching party [7] days advance written notice of its intent to terminate the Agreement. The notice must specify the nature and extent of the breach, the conditions necessary to cure the breach, and the effective date of the termination action. The rights and remedies in this clause are in addition to any other rights and remedies provided by law or under this agreement.

a) **Termination by Owner**: The Owner may terminate this Agreement in whole or in part, for the failure of the Consultant to:
   1. Perform the services within the time specified in this contract or by Owner approved extension;
   2. Make adequate progress so as to endanger satisfactory performance of the Project; or
   3. Fulfill the obligations of the Agreement that are essential to the completion of the Project.

   Upon receipt of the notice of termination, the Consultant must immediately discontinue all services affected unless the notice directs otherwise. Upon termination of the Agreement, the Consultant must deliver to the Owner all data, surveys, models, drawings, specifications, reports, maps, photographs, estimates, summaries, and other documents and materials prepared by the Engineer under this contract, whether complete or partially complete.

   Owner agrees to make just and equitable compensation to the Consultant for satisfactory work completed up through the date the Consultant receives the termination notice. Compensation will not include anticipated profit on non-performed services.

   Owner further agrees to hold Consultant harmless for errors or omissions in documents that are incomplete as a result of the termination action under this clause.

   If, after finalization of the termination action, the Owner determines the Consultant was not in default of the Agreement, the rights and obligations of the parties shall be the same as if the Owner issued the termination for the convenience of the Owner.

b) **Termination by Consultant**: The Consultant may terminate this Agreement in whole or in part, if the Owner:
   1. Defaults on its obligations under this Agreement;
   2. Fails to make payment to the Consultant in accordance with the terms of this Agreement;
   3. Suspends the Project for more than [180] days due to reasons beyond the control of the Consultant.

   Upon receipt of a notice of termination from the Consultant, Owner agrees to cooperate with Consultant for the purpose of terminating the agreement or portion thereof, by mutual consent. If Owner and Consultant cannot reach mutual agreement on the termination settlement, the Consultant may, without prejudice to any rights and remedies it may have, proceed with terminating all or parts of this Agreement based upon the Owner's breach of the contract.

   In the event of termination due to Owner breach, the Engineer is entitled to invoice Owner and to receive full payment for all services performed or furnished in accordance with this Agreement and all justified reimbursable expenses incurred by the Consultant through the effective date of termination action. Owner agrees to hold Consultant harmless for errors or omissions in documents that are incomplete as a result of the termination action under this clause.

A26 TRADE RESTRICTION CERTIFICATION

A26.1 SOURCE

49 USC § 50104

49 CFR part 30

A26.2 APPLICABILITY

Unless waived by the Secretary of Transportation, sponsors may not use AIP funds on a product or service from a foreign country included in the current list of countries that discriminate against U.S. firms as published by the Office of the United States Trade Representative (USTR).

Contract Types – The trade restriction certification and clause applies to all AIP funded projects.

Use of Provision – **MANDATORY TEXT.** 49 CFR part 30 prescribes the language for this model clause. The sponsor must include this certification language in all contracts and subcontracts without modification.

A26.3 SOLICITATION CLAUSE

TRADE RESTRICTION CERTIFICATION

By submission of an offer, the Offeror certifies that with respect to this solicitation and any resultant contract, the Offeror –

1) is not owned or controlled by one or more citizens of a foreign country included in the list of countries that discriminate against U.S. firms as published by the Office of the United States Trade Representative (USTR);

2) has not knowingly entered into any contract or subcontract for this project with a person that is a citizen or national of a foreign country included on the list of countries that discriminate against U.S. firms as published by the USTR; and

3) has not entered into any subcontract for any product to be used on the Federal project that is produced in a foreign country included on the list of countries that discriminate against U.S. firms published by the USTR.

This certification concerns a matter within the jurisdiction of an agency of the United States of America and the making of a false, fictitious, or fraudulent certification may render the maker subject to prosecution under Title 18 USC Section 1001.

The Offeror/Contractor must provide immediate written notice to the Owner if the Offeror/Contractor learns that its certification or that of a subcontractor was erroneous when submitted or has become erroneous by reason of changed circumstances. The Contractor must require subcontractors provide immediate written notice to the Contractor if at any time it learns that its certification was erroneous by reason of changed circumstances.

Unless the restrictions of this clause are waived by the Secretary of Transportation in accordance with 49 CFR 30.17, no contract shall be awarded to an Offeror or subcontractor:

1) who is owned or controlled by one or more citizens or nationals of a foreign country included on the list of countries that discriminate against U.S. firms published by the USTR or
2) whose subcontractors are owned or controlled by one or more citizens or nationals of a foreign country on such USTR list or
3) who incorporates in the public works project any product of a foreign country on such USTR list.

Nothing contained in the foregoing shall be construed to require establishment of a system of records in order to render, in good faith, the certification required by this provision. The knowledge and information of a contractor is not required to exceed that which is normally possessed by a prudent person in the ordinary course of business dealings.

The Offeror agrees that, if awarded a contract resulting from this solicitation, it will incorporate this provision for certification without modification in all lower tier subcontracts. The Contractor may rely on the certification of a prospective subcontractor that it is not a firm from a foreign country included on the list of countries that discriminate against U.S. firms as published by USTR, unless the Offeror has knowledge that the certification is erroneous.

This certification is a material representation of fact upon which reliance was placed when making an award. If it is later determined that the Contractor or subcontractor knowingly rendered an erroneous certification, the Federal Aviation Administration (FAA) may direct through the Owner cancellation of the contract or subcontract for default at no cost to the Owner or the FAA.

A27 VETERAN'S PREFERENCE

A27.1 SOURCE

49 USC § 47112(c)

A27.2 APPLICABILITY

Contract Types – This provision applies to all AIP funded projects that involve labor to carry out the project. This preference, which excludes executive, administrative, and supervisory positions, applies to covered veterans (as defined under § 47112(c)) only when they are readily available and qualified to accomplish the work required by the project.

Use of Provision – No mandatory text provided. The following language is acceptable to the FAA and meets the intent of this requirement. If the sponsor uses different language, the sponsor's language must fully satisfy the requirements of 49 USC § 47112.

A27.3 CONTRACT CLAUSE

VETERAN'S PREFERENCE

In the employment of labor (excluding executive, administrative, and supervisory positions), the Contractor and all sub-tier contractors must give preference to covered veterans as defined within Title 49 United States Code Section 47112. Covered veterans include Vietnam-era veterans, Persian Gulf veterans, Afghanistan-Iraq war veterans, disabled veterans, and small business concerns (as defined by 15 USC 632) owned and controlled by disabled veterans. This preference only applies when there are covered veterans readily available and qualified to perform the work to which the employment relates

A28 DAVIS-BACON WAGE DECISION

General Decision Number: FL190179 01/04/2019 FL179

Superseded General Decision Number: FL20180222 State:

Florida

Construction Type: Highway

County: Okaloosa County in Florida.

HIGHWAY CONSTRUCTION PROJECTS

Note: Under Executive Order (EO) 13658, an hourly minimum wage of $10.60 for calendar year 2019 applies to all contracts subject to the Davis-Bacon Act for which the contract is awarded (and any solicitation was issued) on or after January 1, 2015.

If this contract is covered by the EO, the contractor must pay all workers in any classification listed on this wage determination at least $10.60 per hour (or the applicable

wage rate listed on this wage determination, if it is higher) for all hours spent performing on the contract in calendar year 2019. If this contract is covered by the EO and a classification considered necessary for performance of work on the contract does not appear on this wage determination, the contractor must pay workers in that classification at least the wage rate determined through the conformance process set forth in 29 CFR 5.5(a)(1)(ii) (or the EO minimum wage rate,

if it is higher than the conformed wage rate). The EO minimum wage rate will be adjusted annually. Please note that this EO applies to the above-mentioned types of contracts entered into by the federal government that are subject to the Davis-Bacon Act itself, but it does not apply to contracts subject only to the Davis-Bacon Related Acts, including those set forth at 29 CFR 5.1(a)(2)-(60). Additional information on contractor requirements and worker protections under the EO is available at www.dol.gov/whd/govcontracts.

Modification Number	Publication
Date 0	01/04/2019

* SUFL2013-040 08/19/2013

	Rates	Fringes
CARPENTER	$ 13.71	0.00
CEMENT MASON/CONCRETE FINISHER, Includes Form Work	$ 11.71	0.00
ELECTRICIAN	$ 22.11	0.00
HIGHWAY/PARKING LOT STRIPING: Operator (Striping Machine)	$ 13.81	0.00

HIGHWAY/PARKING LOT STRIPING:

Painter	$ 12.13	0.00
IRONWORKER, ORNAMENTAL	$ 13.48	0.00
IRONWORKER, REINFORCING	$ 16.24	0.00
IRONWORKER, STRUCTURAL	$ 16.42	0.00
LABORER (Traffic Control Specialist)	$ 11.51	0.00
LABORER: Asphalt, Includes Raker, Shoveler, Spreader and Distributor	$ 10.91	0.00
LABORER: Common or General	$ 9.71	0.00
LABORER: Flagger	$ 10.25	0.00
LABORER: Grade Checker	$ 10.83	0.00
LABORER: Mason Tender - Cement/Concrete	$ 12.81	0.00
LABORER: Pipelayer	$ 11.70	0.00
OPERATOR: Backhoe/Excavator/Trackhoe	$ 14.83	0.00
OPERATOR: Bobcat/Skid Steer/Skid Loader	$ 14.07	0.00
OPERATOR: Broom/Sweeper	$ 11.10	1.89
OPERATOR: Bulldozer	$ 14.29	0.00

OPERATOR: Concrete Finishing Machine.....$ 15.44 0.00

OPERATOR: Crane.....$ 21.23 0.00

OPERATOR: Curb Machine.....$ 19.21 0.00

OPERATOR: Drill.....$ 14.78 0.00

OPERATOR: Forklift.....$ 12.29 0.00

OPERATOR: Gradall.....$ 14.71 0.00

OPERATOR: Grader/Blade.....$ 16.50 0.00

OPERATOR: Loader.....$ 11.66 0.00

OPERATOR: Mechanic.....$ 15.84 0.00

OPERATOR: Milling Machine.....$ 13.29 1.92

OPERATOR: Oiler.....$ 16.32 0.00

OPERATOR: Paver(Asphalt, Aggregate, and Concrete).....$ 12.87 0.00

OPERATOR: Piledriver.....$ 17.23 0.00

OPERATOR: Post Driver (Guardrail/Fences).....$ 17.02 0.00

OPERATOR: Roller.....$ 11.06 0.00

OPERATOR: Scraper.....$ 12.01 0.00

OPERATOR: Screed.....$ 13.68 0.00

OPERATOR: Trencher.....$ 16.04 0.00

PAINTER: Spray.....$ 19.57 0.00

TRUCK DRIVER: Dump Truck.....$ 10.86 0.00

TRUCK DRIVER: Flatbed Truck.....$ 14.28 0.00

TRUCK DRIVER: Lowboy Truck.....$ 13.35 0.00

TRUCK DRIVER: Slurry Truck.....$ 11.96 0.00

TRUCK DRIVER: Water Truck.....$ 12.90 0.00

WELDERS - Receive rate prescribed for craft performing operation to which welding is incidental.

==========

Note: Executive Order (EO) 13706, Establishing Paid Sick Leave for Federal Contractors applies to all contracts subject to the Davis-Bacon Act for which the contract is awarded (and any solicitation was issued) on or after January 1, 2017. If this contract is covered by the EO, the contractor must provide employees with 1 hour of paid sick leave for every 30 hours they work, up to 56 hours of paid sick leave each year.

Employees must be permitted to use paid sick leave for their own illness, injury or other health-related needs, including preventive care; to assist a family member (or person who is like family to the employee) who is ill, injured, or has other health-related needs, including preventive care; or for reasons resulting from, or to assist a family member (or person who is like family to the employee) who is a victim of, domestic violence, sexual assault, or stalking. Additional information on contractor requirements and worker protections under the EO is available at www.dol.gov/whd/govcontracts.

Unlisted classifications needed for work not included within the scope of the classifications listed may be added after award only as provided in the labor standards contract clauses (29CFR 5.5 (a) (1) (ii)).

The body of each wage determination lists the classification and wage rates that have been found to be prevailing for the cited type(s) of construction in the area covered by the wage determination. The classifications are listed in alphabetical order of "identifiers" that indicate whether the particular rate is a union rate (current union negotiated rate for local), a survey rate (weighted average rate) or a union average rate (weighted union average rate).

Union Rate Identifiers

A four letter classification abbreviation identifier enclosed in dotted lines beginning with characters other than "SU" or "UAVG" denotes that the union classification and rate were prevailing for that classification in the survey. Example: PLUM0198-005 07/01/2014. PLUM is an abbreviation identifier of the union which prevailed in the survey for this classification, which in this example would be Plumbers. 0198 indicates the local union number or district council number where applicable, i.e., Plumbers Local 0198. The next number, 005 in the example, is an internal number used in processing the wage determination. 07/01/2014 is the effective date of the most current negotiated rate, which in this example is July 1, 2014.

Union prevailing wage rates are updated to reflect all rate changes in the collective bargaining agreement (CBA) governing this classification and rate.

Survey Rate Identifiers

Classifications listed under the "SU" identifier indicate that no one rate prevailed for this classification in the survey and the published rate is derived by computing a weighted average rate based on all the rates reported in the survey for that classification. As this weighted average rate includes all rates reported in the survey, it may include both union and non-union rates. Example: SULA2012-007 5/13/2014. SU indicates the rates are survey rates based on a weighted average calculation of rates and are not majority rates. LA indicates the State of Louisiana. 2012 is the year of survey on which these classifications and rates are based. The next number, 007 in the example, is an internal number used in producing the wage determination. 5/13/2014 indicates the survey completion date for the classifications and rates under that identifier.

Survey wage rates are not updated and remain in effect until a new survey is conducted.

Union Average Rate Identifiers

Classification(s) listed under the UAVG identifier indicate that no single majority rate prevailed for those classifications; however, 100% of the data reported for the classifications was union data. EXAMPLE: UAVG-OH-0010 08/29/2014. UAVG indicates that the rate is a weighted union average rate. OH indicates the state. The next number, 0010 in the example, is an internal number used in producing the wage determination. 08/29/2014 indicates the survey completion date for the classifications and rates under that identifier.

A UAVG rate will be updated once a year, usually in January of each year, to reflect a weighted average of the current negotiated/CBA rate of the union locals from which the rate is based.

WAGE DETERMINATION APPEALS PROCESS

1.) Has there been an initial decision in the matter? This can be:

* an existing published wage determination
* a survey underlying a wage determination
* a Wage and Hour Division letter setting forth a position on a wage determination matter
* a conformance (additional classification and rate) ruling

On survey related matters, initial contact, including requests for summaries of surveys, should be with the Wage and Hour Regional Office for the area in which the survey was conducted because those Regional Offices have responsibility for the Davis-Bacon survey program. If the response from this initial contact is not satisfactory, then the process described in 2.) and 3.) should be followed.

With regard to any other matter not yet ripe for the formal process described here, initial contact should be with the Branch of Construction Wage Determinations. Write to:

Branch of Construction Wage Determinations
Wage and Hour Division

U.S. Department of Labor

200 Constitution Avenue, N.W.
Washington, DC 20210

2.) If the answer to the question in 1.) is yes, then an interested party (those affected by the action) can request review and reconsideration from the Wage and Hour Administrator (See 29 CFR Part 1.8 and 29 CFR Part 7). Write to:

Wage and Hour Administrator

U.S. Department of Labor

200 Constitution Avenue, N.W.
Washington, DC 20210

The request should be accompanied by a full statement of the

interested party's position and by any information (wage payment data, project description, area practice material, etc.) that the requestor considers relevant to the issue.

3.) If the decision of the Administrator is not favorable, an interested party may appeal directly to the Administrative Review Board (formerly the Wage Appeals Board). Write to:

Administrative Review Board

U.S. Department of Labor

200 Constitution Avenue, N.W.
Washington, DC 20210

4.) All decisions by the Administrative Review Board are final.

==========

END OF GENERAL DECISION

END OF SECTION 100

GENERAL REQUIREMENTS

BID DOCUMENTS

CONSTRUCT WEST APRON EXPANSION
AND INFRASTRUCTURE AT VPS

Section 01010

Summary of Work

PART 1 - GENERAL

1.1 RELATED DOCUMENTS: Contract Drawings, General Provisions, Supplementary Conditions, General *Requirements*, and other Special Provisions and Specifications apply to work of this section.

1.2 CONTRACT DOCUMENTS: Indicate the work of the Contract and related requirements and conditions that have an impact on the project. Related requirements and conditions that are indicated on the Contract Documents include, but are not necessarily limited to the following:

A. Existing site conditions and restrictions on use of the site.

B. Mandatory staging/sequencing.

C. Requirements for partial utilization of various elements prior to substantial completion of the work.

D. Work to be performed concurrently by the Owner.

1.3 SUMMARY BY REFERENCES**:** Work of the Contract can be summarized by references to the Contract, General Provisions, Supplementary Conditions, Specifications, Drawings, and Addenda and Modifications to the contract documents issued subsequent to the initial printing of this Project Manual, including but not necessarily limited to printed material referenced by any of these. It is recognized that work of the Contract is also unavoidably affected or influenced by governing regulations, natural phenomenon including weather conditions, and other forces outside the contract documents.

1.4 CONSTRUCTION PHASING: To minimize the impact to aircraft operations and airfield tenants, and to avoid construction during adverse weather seasons, the Contract shall be completed in phases as specified hereinafter as described on the plans. Each phase of the Contract shall be completed within the contract time as specified herein.

1.5 CONSTRUCTION TIME:

A. Time Schedule: The work as described by the contract specifications and as shown on the plans shall be completed and ready for use by the Owner within **350** consecutive calendar days after the date of Notice-to-Proceed. The time schedule for completion of this project is critical and liquidated damages as prescribed in the Contract will be enforced.

1.6 LIQUIDATED DAMAGES:

A. Owner and Contractor recognize that time is of the essence and that Owner will suffer financial loss if the work is not substantially complete in accordance with the time(s) specified herein. They also recognize the delays, expenses and difficulties involved in proving in a legal or arbitration preceding the actual loss suffered by Owner if the work is not completed on time. Accordingly, instead of requiring any such proof, Owner and Contractor agree that as liquidated damages for delay (but not as a penalty) Contractor shall pay Owner the daily rate stipulated in the Okaloosa County Standard Clauses contained in the Front End Documents section of the Project Manual for each phase shown in the Liquidated Damages Schedule below.

B. Contractor further understands and hereby expressly agrees that in addition to liquidated damages specified hereinafter, to pay the Owner the actual costs to Owner for any inspector or inspectors necessarily employed by Owner on the work and the actual costs to Owner for the Engineer's observation of construction and project representative services including all travel and subsistence expenses after the date specified for Project completion until the work is completed and ready for final payment. Further, the Contractor agrees that the sums to be paid the Owner may be deducted from the sum due the Contractor for work performed as provided in Section 90 of the General Provisions.

1. LIQUIDATED DAMAGES SCHEDULE

Phase	**Begin Date**	**Consecutive Calendar Days to Complete**	**Liquidated Damages**
1	Notice to Proceed	120	Daily Rate on page OSCS-6
Entire Project	Notice to Proceed	350	Daily Rate on page OSCS-6

C. The Contractor shall complete all inspection punch list items determined by the Owner and the Engineer within 30 consecutive calendar days from the date of the Substantial Completion inspection. Failure to do so will result in liquidated damages equal to the daily rate on page OSCS-6.

D. The daily rate on page OSCS-6 will be based on the original contract amount for the entire project.

1.7 CONCURRENT WORK BY OWNER**:**

A. Overlapping Work: The work to be performed may overlap work by others to be performed concurrently. Each Contractor shall coordinate and schedule his work with the knowledge that each may be working the same area simultaneously. Each Contractor will be expected to cooperate with the Engineer, Owner, and other Contractors in the completion of the work.

B. Disputes: The Engineer, whose decision will be final, will decide any disputes arising between the Contractors.

C. Coordination: Contractors shall coordinate their schedules and work activities very closely, including holding weekly meetings in the presence of the Engineer's onsite representative. Contractors must cooperate with each other, including working around each other's work activities. Potential delays as a result of lack of coordination will not be considered grounds for claim for additional time extensions and/or additional compensations.

1.8 CONTRACTOR USE OF PREMISES:

A. Use of the Site: The Contractor shall confine his operations at the site to the areas permitted under the Contract. Portions of the site beyond areas on which work is indicated are not to be disturbed. Conform to site rules and regulations affecting the work while engaged in project construction.

B. Open Passage: Keep existing drives, entrances, and air operations areas designated to remain open, clear, and available to the Owner, his employees and the public at all times. Do not use these areas for parking or storage of materials.

C. Storage: Do not unreasonably encumber the site with materials or equipment. Confine stockpiling of materials and location of storage sheds to the areas indicated. If additional storage is necessary, obtain Engineer's approval.

D. Vehicle/Equipment Security: Lock automotive type vehicles, such as passenger cars and trucks, and other mechanized or motorized construction equipment, when parked and unattended, so as to prevent unauthorized use. Do not leave such vehicles or equipment unattended with the motor running or the ignition key in place.

1.9 WORK RESTRICTION**:**

A. NAVAID Areas: During the time of construction, the Contractor may be restricted from working in or around certain essential electronic navigational aids necessary to the safe operation of the airport. The Contractor is hereby notified that the Engineer may restrict construction operations in those areas closest to the active runway and taxiways.

B. Radio Communication: Contractor shall maintain two-way radio communication with the Airport air operations personnel, on their frequency, at all times during construction. Contractor shall have a working radio on site at all times during construction and shall assign responsible personnel, including flagmen, to continuously monitor the radio. All radios shall be as specified in Section 01510.

C. Notice to Airmen (NOTAMS): The Contractor shall provide the necessary information on construction conditions so that the Owner can advise the Flight Service Station to issue a NOTAM in accordance with established criteria. All requests for NOTAMS for taxiway closures shall be made at least 48 hours in advance (not including weekends) by the Contractor to the Engineer. All requests for closure of a runway or for moving into a phase that requires the closure of a Navaid shall be made at least 7 days in advance (not including weekends) by the Contractor to the Engineer.

D. Turf Restoration: All non-paved areas that are disturbed by the Contractor's work, staging area, haul roads, etc. shall be reseeded and restored to original condition by the Contractor. Except where otherwise specified, there will be no separate pay item for this work; it will be considered incidental to and included in the price bid for Item C-105, Mobilization.

E. Security: Contractor shall provide security within his construction area and shall keep all unauthorized personnel out.

F. Haul Route on Airfield Pavement: Contractor will not be allowed to use any of the existing runways, taxiways, or aprons as part of the haul road unless authorized in writing by the Engineer.

G. Access Points: All construction traffic shall enter and exit the project area only through the project access point(s) shown on the plans or approved by the Engineer. Contractor will be responsible for security of entrance gates under use by him/her.

H. Construction Stakeout: The Contractor shall perform construction stakeout in accordance with Article 50-06 of the General Provisions.

I. Haul Route: The Contractor shall be responsible for establishing haul routes suitable for supporting all necessary transportation and construction equipment for the duration of the project. Any existing roads or other areas that are used as part of the haul route shall be restored to their original condition after completion of the project. The Contractor will be responsible for all clean-up operations of debris that may be on the haul route and for watering and/or other dust preventive measures to preclude fugitive dust from affecting buildings, occupants, or airfield operations. No separate payment will be made for seeding or mulching, or pavement restoration; such costs will be incidental to and included in the price bid for Item C-105, Mobilization.

J. Airfield Safety Devices: Contractor shall maintain all airfield safety devices such as staked limit lines for the duration of the project as required. Damaged stakes or flagging shall be replaced immediately.

K. Vehicular Markings and Lighting: All vehicles and equipment used on the airfield shall meet airport requirements for marking and lighting.

L. Contacts During Non-Working Hours: For the duration of the project, the Contractor shall designate a list of authorized individuals in a prioritized order, to be on 24 hour call, and these individuals shall be equipped with a beeper and cellular phone. These individuals shall be able to respond to any situation arising out of the performance of the work on this project, particularly during nighttime hours, and shall respond and be on the project site within one hour after the phone call or beep.

M. Airfield Pavement Cleanup: The Contractor shall promptly clean any and all debris arising from the project work that is left on operational airfield pavement. The Owner may remove any debris attributable to the Contractor found to be a hazard to aircraft. A fee of $250/hour will be assessed to the Contractor for all such cleaning and will be deducted on the next Contractor pay request.

1.10 COORDINATION**:** The work of this Contract includes coordination by the Contractor of the entire work of the project, including preparation of general coordination drawings, diagrams and schedules, and control of site utilization, from beginning of construction activity through project close-out and warranty periods.

1.11 PARTIAL OWNER OCCUPANCY OR USE**:** The Owner reserves the right to use completed and accepted work provided such use does not interfere with completion of other work. Such use will not affect warranty stipulations addressed elsewhere in the contract documents.

PART 2 - PRODUCTS (Not Used.)

PART 3 - EXECUTION

3.1 MEASUREMENT AND PAYMENT**:** Except as otherwise specified, no separate measurement or payment will be made for work set forth in this section; such costs will be considered as incidental to and included in the price for Section C-105, Mobilization, or other items as appropriate.

END OF SECTION 01010.

Section 01030

Airport Project Procedures

PART 1 - GENERAL

1.1 INTRODUCTION: This project will include Contractor operations within or near active Air Operations Areas (AOA). The Airport will conduct normal aircraft operations during the course of this project, subject to certain restrictions called out in this section or elsewhere in the specifications. Therefore, to provide for the security and safety of Airport users and the Contractor's forces, as well as to minimize interruptions to aircraft operations, the Contractor shall limit his work within the areas designated and conduct his operations as specified.

1.2 Any fines or assessments levied against the Sponsor as a result of unauthorized intrusions in the AOA or other violations by the Contractor's personnel or those of his subcontractors will be passed on to the Contractor. In addition, the Contractor will be subject to a fine of $1,000.00 per incident, assessed by the Sponsor.

1.3 AIR OPERATION AREA (AOA) SAFETY REQUIREMENTS:

A. Barricades: Existing runways, taxiways and aprons outside the limits of construction shall be separated from construction areas with barricades as shown on the plans and described in Section 01530.

B. Radio Communication: The Contractor shall monitor the Airport 2-way UNICOM radio frequency (121.8 MHZ)at all times during construction, and shall remain clear of the runway approach and obstacle free zones during aircraft operations. Contractor shall have a working radio as specified in Section 01510 on site at all times during construction and shall assign responsible personnel to continuously monitor the radio. The contractor shall monitor incoming flights and clear men and equipment from the taxilane object free area (TOFA) before an incoming flight reaches the terminal area.

C. Runway and Taxiway/Taxilane Closures: Only the Owner will make Closures of runways and taxiways/taxilanes. The Owner shall contact the appropriate FAA Flight Service Station prior to issuing the Notice-to-Proceed so that a Notice-to-Airmen (NOTAM) for runway or taxiway closure can be issued in accordance with established criteria. Notams are not required for a taxilane closure Construction operations within the runway or taxiway safety zone shall not begin until the Contractor receives clearance from the Owner and Engineer assuring that the adjoining runway or taxiway has been closed.

1.4 CONSTRUCTION SAFETY REQUIREMENTS:

A. General:

1. Safety Officer: The Contractor is required to employ a Safety Officer who will be the liaison between the Contractor, the Engineer and the Owner in all safety related matters for the duration of the project. The Safety Officer shall be on call 24 hours per day for emergency maintenance of airport hazard lighting, barricades, and other safety features.

2. Protection of Utilities: The Contractor shall be responsible for field marking and protecting all utilities within the construction limits.

3. Storage of Equipment, Vehicles, and Materials: All equipment, vehicles, and materials must be stored in the designated storage or staging area or in areas acceptable to the Engineer.

4. Vehicular Markings: Contractor vehicles and equipment shall be marked with checkered flags and lighted with flashing beacons to comply with requirements of FAA AC 150/5210-5D. All vehicles and equipment shall display 3' x 3' flags, orange and white "checkerboard" pattern, with the squares being 1' x 1' each. All vehicles and construction equipment working during the night or during periods of low visibility shall be equipped with an amber colored rotating beacon light.

5. Construction Methods Limitation:
   a. No open flames or burning will be allowed on Airport property except as specifically authorized by the Engineer in writing.

   b. Stockpiled material shall be constrained in a manner to prevent displacement by jet blast, prop blast, or wind, and shall be kept to a height that will not penetrate FAR Part 77 imaginary air space and shall be located outside the runway and taxiway object free areas and runway protection zone (RPZ).

6. Safety and Accident Protection:
   a. The Contractor shall comply with all applicable federal, state, and local laws, ordinances, and regulations governing safety, health, and sanitation; shall provide barricades; and shall take any other needed actions, on his own responsibility, that are reasonably necessary to protect the life and health of employees on the job, the safety of airport users, the safety of moving and parked aircraft, and other property during the performance of the work.
   b. The Safety Officer's duties shall include accident prevention.

7. Navigational Aids: Airport navigational aid critical areas are shown on the drawings or will be indicated by the Engineer. The Contractor shall not enter these areas without the Engineer's approval.

8. FAA Advisory Circular: Except as otherwise specified, FAA AC 150/5370-2G and all its references shall be used in maintaining airport operational safety during construction. A copy of this Advisory Circular is attached.

B. Runway and Taxiway Safety Zones:

1. Limitations: Work on this project is not in proximity to a runway or runway approach area. When necessary to accomplish construction in areas adjacent to taxiways and apron taxilanes, the construction equipment, vehicles, and men are authorized to operate

without interruption within the project limits, except within the following areas and as specified otherwise:

a. Distance from taxilane centerline
   1) - Within **81** feet.

b. Distance from active taxiway centerline
   1) - Within **129** feet. (Taxiway D1 and D2)

2. Request for Facility Closures: Construction activities on runways or taxiways or within the above-restricted areas shall only be performed at times when the runway or taxiways are closed to aircraft. The Contractor through the Engineer thereof must request closure of a runway or taxiway or any portion in writing. This request must indicate the areas needed and a schedule of operations and time(s) required for operations within the area. The Owner reserves the right, however, to shift any approved closure periods to alleviate aircraft congestion or when inclement weather conditions dictate.

3. Equipment Operation Restrictions: Contractor is not permitted to operate equipment within a Taxiway/Taxilane Object Free Area (TOFA) and Runway Obstacle Free Zone (ROFZ) except when the runway or taxiway has been closed to traffic and a NOTAM issued. Before re-opening a closed runway or taxiway all excavated trenches and holes within the ROFZ or TOFA shall be backfilled, tamped and leveled to match existing grades and all equipment and personnel removed from the ROFZ or TOFA. Construction equipment must be removed from the runway and taxiway OFA at the end of each work shift. The Contractor may operate equipment within the apron Taxilane Object Free Area up to the edge of the taxilane on a pull back basis with all personnel and above ground equipment removed from the TOFA prior to aircraft operating on the taxilane. Barricades must also be provided along the edge of the taxilane as prescribed in the plans when any excavation work is in progress within the TOFA.

4. Stockpiles: Stockpiled materials shall not be permitted within the runway or taxiway safety zones.

5. Grading Requirements: All construction within a restricted area shall be performed in such a manner that, at the end of the closure period, it will leave the safety area with no abrupt grade changes or grades in excess of 5 percent, and with no trenches with depth or width greater than 3 inches.

C. Obstructions to Navigation:

1. Violation of Safety Zone Surfaces: Penetration of equipment, vehicles, materials, or men into the safety zones and approach surfaces requires the preparation and distribution of Notices to Airmen (NOTAM) in advance to the actual penetration.

2. Scheduling: When part of the work in this project is in violation of FAR Part 77, the clearance distance requirements from runway and taxiway edges shall be incorporated into the construction sequence schedule. At no time shall the construction limits of the area under construction violate the safety zones without prior notification to and approval by the Engineer.

3. Coordination and Communication: Work within and adjacent to active AOAs shall be coordinated with the Engineer prior to commencement of the activity. The construction

superintendent and the resident inspector, both of which shall be in constant radio contact with ATC, shall accompany work crews in these areas.

1.5 SAFETY PLANNING: The Contractor shall integrate and maintain requirements of airport operational safety into each planning and work schedule. The Contractor's Safety Officer shall continuously monitor all planning schedules and work underway for compliance to AC 150/5370-2 (Latest Edition); and shall maintain vigilance to detect areas needing attention due to oversight or altered construction activities. Airport operational safety during construction will be on the agenda at the preconstruction conference and each coordination and progress meeting.

1.6 SECURITY REQUIREMENTS: The Contractor has the responsibility for maintaining control of the access gates or any other entrance to the AOA. The Contractor may utilize a gate guard or install an automatic operated gate controller with limited access with numeric keypad. The Contractor may be required to erect temporary fencing to protect the AOA during construction. The Contractor's method of maintaining security shall be set forth in his Security Plan and shall comply with the airport's rules and regulations concerning work in the airport restricted areas. There will be no separate measurement or payment for gate guards or temporary fencing required maintaining the integrity of the AOA.

8 Steps to a Successful Badge Application

1. Badge Applicant Completes "Destin Fort Walton Beach Airport Identification Badge Application"
2. Employer Writes Letter authorizing SIDA Badge.
   a. Obtain Sample Letter from the Airport Sheriff's Office.
   b. Letter MUST be on Company Letterhead.
3. Badge Applicant Writes Letter to Employer stating their 10 years of employment history.
4. Authorized Person (Employer) writes letter stating verification of the applicants last (5) years of employment.
   a. Letter MUST be on Company Letterhead.
5. Authorized Person (Employer) fills out the "Employment Checklist".
   a. Obtain "Employment Checklist" from the Airport Sheriff's Office.
6. The employee will need 2 forms of identification, one being a photo ID.
7. Applicant brings all of the above items completed to the badging office in the Destin Fort Walton Beach Airport to be fingerprinted. Call for badging hours at 850-651-7166.
8. The applicant will attend the SIDA Training and be fingerprinted. Once the fingerprint results are received back with no disqualifying crimes, the SIDA badge is issued.

The Security Badge is the property of the Destin Fort Walton Beach Airport and must be returned when terminated from employment at this airport. Fees will be assessed for lost badges.

1.7 BARRICADES: Contractor shall provide barricades along active taxiway pavement areas, closed sections of the runway, and elsewhere as shown on the plans or directed by the

Engineer while work is proceeding in the runway, taxiway, and apron areas. Barricades shall be sited and relocated during the course of the work to clearly identify areas closed to aircraft operations.

1.8 APRON, TAXILANE AND TAXIWAY CLOSURES:

A. When any area of the apron or apron taxilane is required to be closed during any phase of the work the Contractor shall schedule his work to provide continuous access to terminal gates that remain open as shown in the phasing plans. Taxiways D1 and D2 are to remain open at all times. Barricades and/or closed taxiway markers shall be placed as directed by the Engineer.

B. The Contractor shall coordinate and schedule apron and taxilane closures and temporary relocation of any runway threshold with Owner through Engineer before closure is required so that Owner can issue appropriate NOTAMS.

C. Taxilane and taxiway closures shall be scheduled in advance. Contractor shall identify taxiway closures with barricades and by covering taxiway lights within the closure limits. Remove barricades and covers when no longer needed or as directed by Engineer.

PART 2 - PRODUCTS

2.1 BARRICADES: Barricades, when required, shall be constructed as specified in Section 01530.

PART 3 - EXECUTION

3.1 LIMITATION OF CLOSURES: Only the Owner will make Airfield pavement closures. The Contractor shall request the closure through the Engineer from the Owner.

3.2 BARRICADE INSTALLATION: Install barricades at locations shown on the drawings and where directed by Engineer. Anchor barricades as specified in Section 01530. Maintain barricades until removal is directed by Engineer. Barricade batteries shall be checked daily to insure adequate operation of the flashers during the night. Replace batteries as required. Upon removal of barricades, repair any damage to pavement or surrounding area caused by barricades.

3.3 MEASUREMENT AND PAYMENT: Except as otherwise specified in Section 01530, no measurement or payment will be made for work in this section; it will be considered as incidental cost to Mobilization and other items of work.

END OF SECTION 01030

Section 01040

Project Coordination

PART 1 - GENERAL

1.1 RELATED DOCUMENTS: All contract documents and drawings apply to work of this section.

1.2 DESCRIPTION OF WORK: Administrative and supervisory requirements necessary for coordination of work on the project include but are not necessarily limited to the following:

1. Coordination and meetings.
2. Surveys and records or reports.
3. Limitations on use of site.
4. Special reports.
5. General installation provisions.
6. Cleaning and protection.
7. Conservation and salvage.

PART 2 - PRODUCTS (Not applicable)

PART 3 - EXECUTIONS

3.1 COORDINATION AND MEETINGS:

A. General: The Contractor shall prepare a written memorandum on required coordination activities and include such items as required notices, reports and attendance at meetings. Distribute this memorandum to each entity performing work at the Project site. Prepare similar memorandum for separate Contractors where interfacing of their work is required.

B. Preconstruction Conference: A Preconstruction Conference will be scheduled after award of Contract and prior to issuance of a Notice to Proceed. Key Project personnel representing the Prime Contractor and all major Subcontractors will be required to attend this Conference. All other parties involved with this Project, such as the Owner, Engineer, and FAA, will also be represented. All affected parties at the Preconstruction Conference will review the entire Construction Schedule carefully. The Contractor shall prepare a detailed Construction Schedule for review prior to and at the Preconstruction Conference.

C. Coordination Meetings: The Contractor shall hold General Project Coordination Meetings at regularly scheduled times convenient for all parties involved. These meetings may be as often as weekly if required. These meetings are in addition to specified meetings held for other purposes, such as regular Project meetings and special Pre-installation Meetings. Request representation at each meeting by every party currently involved in coordination or planning for the work of the entire Project. Conduct meetings in a manner, which will resolve coordination

problems. Record results of the meeting and distribute copies to everyone in attendance and to others affected by decision or actions resulting from each meeting.

1. The Contractor shall also conduct daily coordination meetings with the Engineer's representative, FAA and designated Owner's representative to coordinate construction and airport operations.

D. Progress Meetings: Conduct progress meetings by teleconference weekly and at the project site monthly. Notify the Owner and Engineer of scheduled meeting dates. Coordinate dates of meetings with preparation of the payment request.

E. Attendees: In addition to representatives of the Owner and Engineer, each subcontractor, supplier or other entity concerned with current progress or involved in planning, coordination or performance of future activities shall be represented at these meetings by persons familiar with the project and authorized to conclude matters relating to progress.

F. Agenda: Review and correct or approve minutes of the previous progress meeting. Review other items of significance that could affect progress. Include topics for discussion as appropriate to the current status of the project, and to airport operational safety during construction.

1. Contractor's Construction Schedule: Review progress since the last meeting. Determine where each activity is in relation to the Contractor's Construction Schedule, whether on time or ahead or behind schedule. Determine how construction behind schedule will be expedited; secure commitments from parties involved to do so. Discuss whether schedule revisions are required to ensure that current and subsequent activities will be expedited; secure commitments from parties involved doing so. Discuss whether schedule revisions are required to ensure that current and subsequent activities will be completed within the Contract Time.
2. Other: Review the present and future needs of each entity present, including such items as:
    a) Interface requirements.
    b) Time.
    c) Sequences.
    d) Deliveries.
    e) Off-site fabrication problems.
    f) Access.
    g) Site utilization.
    h) Temporary facilities and services.
    i) Hours of work.
    j) Hazards and risks.
    k) Housekeeping.
    l) Quality and work standards.
    m) Change orders.
    n) Documentation of information for payment requests.

G. Reporting: No later than 3 days after each progress meeting date, distribute copies of minutes of the meeting to each party present and to other parties who should have been present. Include a brief summary, in narrative form, of progress since the previous meeting and report.

H. Schedule Updating: Revise the construction schedule after each progress meeting where revisions to the schedule have been made or recognized. Issue the revised schedule concurrently with the report of each meeting.

3.2 SURVEYS AND RECORDS/REPORTS:

A. Construction Staking: The Engineer has established survey base lines for the Contractor. The Contractor shall take all necessary precautions to prevent the loss or damage of primary control points. The Contractor will be responsible for staking required for construction. Working from lines and levels established by the design survey, establish and maintain benchmarks and other dependable markers required for construction. Establish bench marks and markers to set lines and levels for work at each stage of construction and elsewhere as needed to properly locate each element of the project. Calculate and measure required dimensions as shown within recognized tolerances. Drawings shall not be scaled to determine dimensions. Advise entities performing work of marked lines and levels provided for their use.

B. Survey Procedures: Before proceeding with the layout of actual work, verify the layout information shown on the drawings, in relation to the property survey and existing benchmarks. As work proceeds, check every major element for line, level and plumb. Maintain a surveyor's log or record book of such checks; make this log or record book available for the Engineer's reference. Record deviations from required lines and levels, and advise the Engineer promptly upon detection of deviations that exceed indicated or recognized tolerances. Record deviations, which are accepted, and not corrected, on record drawings. Survey work shall be performed by and under supervision of a professional (registered) land surveyor in the State where the project is located.

C. Quality of Work: The elevations of permanent and temporary benchmarks shall be determined and recorded to the nearest 0.01 foot. Differential leveling and transit traverses shall be of such precision that the error of vertical closure in feet shall not exceed plus or minus 0.1 foot in 5000 feet. The angular error of closure for transit traverses shall not exceed 1.0-minute times the square root of the number of angles turned.
   1. Slope stakes shall be placed, as a minimum, at 100-foot stations, breaks in the original ground surface, and at any other intermediate stations necessary to insure accurate location for construction layout and measurement. Slope stakes and cross sections shall be perpendicular to the centerline. Significant breaks in grade shall be determined for cross sections. Distances shall be measured horizontally and recorded to the nearest 0.1 foot. Side shots for interim construction stakes may be taken with a hand level.

D. Records: All survey data shall be recorded in fully identified, standard hardbound engineering survey field notebooks with consecutively numbered pages. All field notes and printed data shall include the purpose or description of the work, the date the work was performed, weather data, sketches and the personnel who performed and checked the work. Electronically generated survey data and computations shall be bound, page numbered and cross-referenced in a bound field notebook containing the index for all survey data.
   1. The construction survey records shall be available at all times during the progress of the work for examination and use by the Engineer and copies shall be made available to the Engineer upon request. The original field notebooks and other records shall be turned over to and become the property of the Owner prior to final acceptance of the work.

E. Quality Assurance Survey Services: Contractor shall furnish surveying services required to establish horizontal and vertical location of soil density tests by Owner's QA testing laboratory.

F. Engineer Services: Engineer will furnish available benchmark and coordinate information at no cost to Contractor.

3.3 LIMITATIONS ON USE OF THE SITE:

A. General: Limitations on site usage as well as specific requirements that impact site utilization are indicated on the drawings and by other contract documents. Schedule deliveries so as to minimize space and time requirements for storage of materials and equipment on site.

B. Waste Disposal: Waste materials shall be disposed of off airport property except as specified otherwise in Contract Documents.

3.4 MEASUREMENT AND PAYMENT: No measurement or payment will be made for work in this section; it will be considered as incidental cost to Mobilization and other items of work.

END OF SECTION 01040

Section 01070

Abbreviations and Symbols

PART 1 - GENERAL

DESCRIPTION:

1. Abbreviations that may be used in the Contract Documents including the drawings are listed in this section and have the identifications and meanings shown herein except where otherwise indicated.
2. Symbols are identified on the drawings.
3. Related requirements in other parts of the Contract Documents.
   a. Drawing symbols: Contract drawings
   b. Drawing abbreviations: Contract drawings.

ABBREVIATIONS:

AASHTO	American Association of State Highway and Transportation Officials
ACI	American Concrete Institute
AF	Air Force
AGCA	Associated General Contractors of America
AI	Asphalt Institute
AIA	American Institute of Architects
AISC	American Institute of Steel Construction
AISI	American Iron and Steel Institute
ANG	Air National Guard
ANSI	American National Standard Institute
API	American Petroleum Institute
AREA	American Railway Engineering Association
ASTM	American Society for Testing and Materials
AWPA	American Wood Preservers Association
AWG	American Wire Gage
AWS	American Welding Society
AWWA	American Water Works Association
COE	Corps of Engineers
CRSI	Concrete Reinforcing Steel Institute
FAA	Federal Aviation Administration
FHWA	Federal Highway Administration
FS	Federal Specifications
MUTCD	Manual on Uniform Traffic Control Devices For Streets and Highways
NEMA	National Electrical Manufacturers Association
NEC	National Electrical Code
NWS	National Weather Service
OSHA	Occupational Safety and Health Act
PCA	Portland Cement Association
UL	Underwriter's Laboratories, Inc.
DHPT	Department of Highways and Public Transportation
DOT	Department of Transportation
HD	Highway Department

Drawing Abbreviations:

4. The following list is not necessarily all-inclusive; additional abbreviations may be used and defined on the drawings.
5. Some abbreviations used on the drawings may not have the same meaning as that identified in the following list; the non-conforming meanings are identified on the drawings when not self-evident.
6. Some variation in use of periods and capitalization may be found on the drawings.

ABBRV	MEANING
AB	Anchor Bolt
ABT	About
ABV	Above
AC	Advisory Circular (FAA)
AC	Alternating current
AC	Asphaltic concrete
ACFT	Aircraft
ADDN	Addition
AF	Air Force
AGG	Aggregate
AIP	Airport Improvement
ATC	Air traffic control
ATCT	Air traffic control tower
AVE	Avenue
AVG	Average
CULV	Culvert
AWOS	Automatic weather observing systems
D	Depth
DAT	Datum
DBL	Double
BF	Both faces
BLDG	Building
BL	Base line
BM	Bench mark
DEF.ANG.	Deflection angle
DEG	Degree
BRK	Brick
BS	Both sides
BTW	Between
DIP	Ductile iron pipe
DIR	Direction
C	Centigrade
C TO C	Center to center
CA	Cable
CB	Catch basin
DWG	Drawing
CD	Check dam
EA	Each
EF	Each face
EJ	Expansion joint
CFS	Cubic feet per second
ENGR	Engineer
CHK	Check
CIP	Cast iron pipe
CL	Clear
CLR	Clearance
CO	Cleanout
CONST	Construction
CORR	Corrugate
EQ	Equal
EQUIV	Equivalent
EW	Each way
EXIST	Existing
ILS	Instrument landing system
F TO F	Face to face
FAR	Federal Aviation Regulation
FDN	Foundation
FG	Finish grade
FIG	Figure
FLD	Field

ABBRV	MEANING
ALIGN	Alignment
ALP	Airport layout plan
ALS	Approach lighting system
ALT	Alternate
ANT	Antenna
AOA	Air operational area
AP	Airport
APPROX	Approximate
ARCH	Architecture
ARP	Airport reference point
ASPH	Asphalt Program
CPP	Corrugated polyethylene pipe
CPS	Cycles per second
CTB	Cement treated base course
AWG	American wire gage
CY	Cubic yard
B TO B	Back to back
BCN	Beacon
BDY	Boundary
BET	Between
BIT	Bituminous
DBST	Double bituminous surface treatment
DC	Direct current
BOT	Bottom
BRL	Building restriction line
DEMO	Demolish
DI	Drop inlet
DIA	Diameter
BW	Both ways
DIM.	Dimension
DIST	Distant
DIV	Division
DO	Ditto
DSGN	Design
DTD	Dated
CBM	Construction benchmark
CEM	Cement
CFM	Cubic feet per minute
EG	For example
EL	Elevation
CHAM	Chamfer
CHG	Change
CI	Cast iron
CJ	Construction joint
C/L	Center line
CMP	Corrugated metal pipe
CONC	Concrete
CONT	Continue
EOP	Edge of pavement
EQUIP	Equipment
EST	Estimate
EXC	Excavate
EXT	Exterior
F	Fahrenheit
FAB	Fabricate
FBO	Fixed base operator
FF	Finish floor
FH	Fire hydrant
FIN	Finish
FOD	Foreign object damage

ABBRV	MEANING
FPM	Feet per minute
FS	Federal Specification
FTG	Footing
FWD	Forward
GAL	Gallon
GEN	General
GOVT	Government
GPS	Gallons per second
GV	Gate valve
HP	High point
HGT	Height
HIRL	High intensity runway lights
HOR	Horizontal
ID	Inside diameter
IFR	Instrument flight rule
INCL	Include
INV	Invert
IP	Iron pipe
JFR	Jet fuel resistant
JT	Joint
KWY	Keyway
LAT	Latitude
LC	Length of curve
LG	Length or long
LIRL	Low intensity runway lights
LOA	Length over-all
LONG	Longitudinal
LS	Lump sum
LVC	Length of vertical curve
MALS	Medium intensity approach lighting system
MAX	Maximum
MHW	Mean high water
PVI	Point of vertical intersection
MITL	Medium intensity taxiway lights
MLS	Microwave landing system
MON	Monument
MTL	Metal
NAVAID	Navigational aid
NO	Number
NOTAM	Notice to airmen
OA	Over-all
OD	Outside diameter
OPS	Operations
PAPI	Precision approach path indicator
PAV'T	Pavement
PCC	Portland cement concrete
PI	Point of intersection
PJF	Premolded joint filler
PL	Plate
PROJ	Project
PSI	Pounds per square inch
PT	Point of tangency
PVC	Point of vertical curve
PVMT	Pavement
QC	Quality control
R	Radius
RW	Runway
RCP	Reinforced concrete pipe
REF	Reference
REINF	Reinforce

ABBRV	MEANING
FPS	Feet per second
FT	Foot or feet
FW	Fresh water
GA	Gage or Gauge
GALV	Galvanize
GFE	Government-furnished equipment
GPM	Gallons per minute
GRD	Ground or grade
GVGI	Generic visual glide slope indicator
HGR	Hangar
HH	Hand hole
HMAC	Hot mix asphaltic concrete
HWY	Highway
IDENT	Identification
IN.	Inch
INT	Intersect
IP	Inlet protection
JB	Junction Box
JMF	Job mix formula
K	Kip (1,000 lb)
L	Left
LB	Pound
LF	Linear feet
LIN	Linear
LITL	Low intensity taxiway lights
LOC	Localizer
LP	Low point
LT	Light
MAINT	Maintenance
MATL	Material
MH	Manhole
MIN	Minimum
MIRL	Medium intensity runway lights
MISC	Miscellaneous
MLW	Mean low water
MSL	Mean sea level
NATL	National
NIC	Not in contract
NOM	Nominal
NTS	Not to scale
OC	On center
OFZ	Obstacle free zone
ORIG	Original
PAR	Precision approach radar
PC	Point of curve
PFC	Porous friction course
PIV	Post indicator valve
POL	Petroleum fuel, oil, and/or lubricants
PREP	Prepare
PROP	Proposed
PT	Point
PVC	Polyvinyl chloride
PVT	Point of vertical tangency
QA	Quality assurance
R	Right
RAIL	Runway alignment indicator lights
RC	Reinforced concrete
RD	Road
REIL	Runway end identifier lights
RELOC	Relocated

ABBRV	MEANING
REP	Repair
RET	Return
ROC	Run of crusher
RPM	Revolutions per minute
RR	Railroad
SABC	Stabilized aggregate base course
SAN	Sanitary
SBST	Single bituminous surface treatment
SEC	Second
SECT	Section
SF	Silt fence
SHT	Sheet
SIM	Similar
SP	Space(s)
SQ	Square
STA	Station
STL	Steel
SUPP	Supplement
SYM	Symbol
SY	Square yards
T	Thick
T&B	Top and bottom
TECH	Technical
TEMP	Temperature
THRU	Through
TOC	Top of curb
TOL	Tolerance
TRANS	Transformer
TW	Taxiway
UD	Underdrain
UGT	Underground telephone line
VASI	Visual approach slope indicator
VC	Vertical curve
VERT	Vertical
VS	Versus
W/	With
W/O	Without
WWF	Welded wire fabric
X	By (used between dimensions)
YD	Yard

ABBRV	MEANING
REQD	Required
REV	Revise
ROW	Right of way
RPZ	Runway protection zone
S	Slope
SALV	Salvage
SB	Straw bale
SCHED	Schedule
SEC Cor	Section corner
SEP	Separate
SF	Square feet
SHLD	Shoulder
SK	Sketch
SPEC	Specification
SS	Stainless steel
STD	Standard
STR	Structural
SWG	Swing
SYM	Symmetrical
SYS	System
T	Ton
TBM	Temporary bench mark
TEL	Telephone
THK	Thick
TL	Taxilane
TOG	Top of grate
TOP	Top of pavement
TSD	Temporary slope drain
TYP	Typical
UG	Underground
USGS	United States Geodetic Survey
VB	Valve box
VCP	Vitrified clay pipe
VFR	Visual flight rules
W	Water
WGT	Weight
WL	Water line
WP	Working point
XSECT	Cross section

SYMBOLS:

7. As outlined on drawings.

PART 2 - PRODUCTS (Not Applicable)

PART 3 - EXECUTION (Not Applicable)

END OF SECTION 01070

Section 01090

Regulations and Definitions

PART 1 - GENERAL

1.1 RELATED DOCUMENTS: Drawings, General Provisions, Supplementary Conditions, Specifications, and other contract documents apply to work of this section. See Section 10 of General Provisions for additional definitions.

1.2 DESCRIPTION OF REQUIREMENTS:

A. General: This section specifies procedural and administrative requirements for compliance with governing regulations, codes and standards imposed upon the work. These requirements include obtaining permits, licenses, inspections, releases and similar documentation, as well as payments, statements and similar requirements associated with regulations, codes and standards.

B. The term "Regulations" is defined to include laws, statutes, ordinances and lawful orders issued by governing authorities, as well as those rules, conventions and agreements within the construction industry which effectively control the performance of the work regardless of whether they are lawfully imposed by governing authority or not.

C. Governing Regulations: Refer to General Provisions, Supplementary Conditions, and General Requirements for requirements related to compliance with governing regulations.

1.3 DEFINITIONS:

A. General Explanation: Certain terms used in contract documents are defined in this article. Definitions and explanations contained in this section are not necessarily complete, but are general for the work to the extent that they are not stated more explicitly in another element of the contract documents.

B. General Requirements: Provisions and requirements of Division 1 sections apply to the entire work of the contract and, where so indicated, to other elements which are included in the project.

C. Indicated: The term "indicated" is a cross-reference to graphic representations, notes or schedules on the drawings, to other paragraphs or schedules in the specifications, and to similar means of recording requirements in contract documents. Where terms such as "shown", "noted", "scheduled", and "specified" are in lieu of "indicated", it is for the purpose of helping the reader locate the cross-reference, and no limitation of locations is intended except as specifically noted.

D. Directed, Requested, etc.: Terms such as "directed", "requested", "authorized", "selected", "approved", "required", "accepted", and "permitted" mean "directed by the Engineer", "requested by the Engineer", and similar phrases. However, no such implied meaning will be interpreted to extend the Engineer's responsibility into the Contractor's area of construction supervision.

E. Approved: Where used in conjunction with the Engineer's response to submittals, requests, applications, inquiries, reports and claims by the Contractor, the term "approved" will be held to limitations of the Engineer's responsibilities and duties as specified in General Provisions and Supplementary Conditions. In no case will the Engineer's approval be interpreted as a release of the Contractor from responsibilities to fulfill requirements of contract documents or acceptance of the work, unless otherwise provided by requirements of the contract documents.

F. Project Site: The term "project site" means the space available to the Contractor for performance of the work, either exclusively or in conjunction with others performing other construction as part of the project. The extent of the project site is shown on the drawings.

G. Furnish: The term "furnish" is used to mean "supply and deliver to the project site, ready for unloading, unpacking, assembly, installation, and similar operations."

H. Install: The term "install" is used to describe operations at project site including the actual "unloading, unpacking, assembly, erection, placing, anchoring, applying, working to dimension, finishing, curing, protecting, cleaning and similar operations."

I. Provide: The term “provides" means "to furnish and install, complete and ready for the intended use."

J. Installer: The "installer" is the "the entity" (person or firm) engaged by the Contractor, its subcontractor or sub-subcontractor for performance of a particular element of construction at the project site, including installation, erection, application and similar required operations. It is a requirement that installers are experienced in the operations they are engaged to perform.

1.4 SUBMITTALS: For the Owner's records, submit copies of permits, licenses, certifications, inspection reports, releases, jurisdictional settlements, notices, receipts for fee payments, judgments, and similar documents, correspondence and records established in conjunction with compliance with standards and regulations bearing upon performance of the work.

PART 2 - PRODUCTS (Not Applicable)

PART 3 - EXECUTION (Not Applicable)

END OF SECTION 1090

Section 01095

NPDES Permit Conformance

PART 1 - General Information:

A. The NPDES program is established under 40CFR122.2

B. The United States Environmental Protection Agency (EPA) issued a National Pollutant Discharge Elimination System (NPDES) General Permit for Storm Water Discharges from Construction Activities that are classified as "Associated with Industrial Activity." This Construction General Permit covers all areas administered by EPA Region 4, which includes Florida. The Construction General Permit was published in Federal Register/Vol. 63, No. 61/Tuesday, March 31, 1998 and is available on EPA's web site or from the Owner.

C. The NPDES permit program requires a Construction General Permit if the construction activity will disturb five acres or greater, or will disturb less than five acres but is part of a larger common plan of development or sale whose total land disturbing activities total five acres or greater (or is designated by the NPDES permitting authority); and will discharge storm water runoff from the construction site into a municipal separate storm water sewer system (MS4) or waters of the United States.

D. For this contract, the Engineer has determined that a Construction General Permit is required. It is therefore required that the Contractor read the permit requirements in the Construction General Permit cited in paragraph C, develop and implement a Storm Water Pollution Prevention Plan (SWPPP), complete and submit a Notice of Intent (NOI), and complete and submit a Notice of Termination (NOT).

E. Detailed guidance on the development of the SWPPP is contained in EPA Publication EPA 832-R-92-005 dated September 1992, titled Storm Water Management for Construction Activities – Developing Pollution Prevention Plans and Best Management Practices.

PART 2 - Specific Requirements:

A. The Contractor shall develop, implement and comply with a plan specifically designed for this construction site and including Best Management Practices (BMPs) and controls which prevent the pollution of storm water discharges.

B. The Contractor shall incorporate into the SWPPP all applicable requirements specified in state or local sediment and erosion control plans or permits or storm water management plans or permits. The Contractor shall submit a certification that the SWPPP reflects these requirements and that these requirements will be complied with during the term of the contract.

C. Prior to commencement of construction, the SWPPP must be prepared and certified by the Contractor. Notice of Intent (NOI) must be forwarded to the Environmental Protection Agency (with an information copy to the Owner) at least 48 hours prior to any land clearing.

D. Recordkeeping: The Contractor shall maintain the Plan and the associated records and reports, including documentation of the required inspections. These documents shall be maintained at

the job site until the site is finally stabilized. Thereafter, the Contractor (Permittee) shall keep the SWPPP and all reports for at least three years.

E. Report Submittal: The Contractor shall include with each payment request two (2) sets of information copies of all required inspection reports, certifications and notifications. Inspection reports to be submitted shall include both weekly reports and special reports required after rainfall events in excess of 0.5". The regulations specifically require an onsite rain gauge. It is recommended that the Contractor record rainfall amount daily. Payment requests will not be processed in the absence of these submittals.

F. When the construction activity has ceased and all areas affected by the work are stabilized, the Contractor shall prepare, certify and submit the required Notice of Termination to the Environmental Protection Agency and the Owner. Final payment application will not be processed in the absence of these submissions.

G. Attached are two fact sheets from the EPA pertaining to the Construction General Permit, a copy of the NOI and NOT, and EPA's "A Brief Guide to Requirements for Developing and Implementation Pollution Prevention Plans for Construction Sites."

PART 3 - PRODUCTS (Not Applicable)

PART 4 - EXECUTION (Not Applicable)

END OF SECTION 1095

Section 01150

Measurement and Payment

PART 1 - GENERAL

1.1 DESCRIPTION:

A. Method of Measurement and Payment: This section supplements Section 90 of the General Provisions and establishes the method of measurement and payment for work performed under this contract.

B. Unit Price: Except where lump sum is indicated, payment for work performed shall be made on a unit price basis in accordance with the accepted bid and the method of payment provided in the General Provisions.

C. Related Requirements in Other Parts of the Specifications:
1. Bid (Proposal)
2. Agreement.
3. Conditions of the Contract.

D. Related Requirements Specified in Other Sections:
1. Summary of Work - Section 01010.
2. Submittals - Section 01300.
3. Contract Closeout - Section 01700.

E. Work With No Identified Payment Items: No additional payment will be made for items of work for which a separate payment item is not specified or contained in the Bid Schedule; such work shall be deemed incidental to the project and payment for said work shall be considered as included in the various unit bid prices.

1.2 APPLICATIONS FOR PAYMENT:

A. Submittal Schedule: Submit Applications for Payment to the Engineer in accordance with the schedule established by Conditions of the Contract and Agreement between Owner and Contractor.

B. Format and Data Required:
1. Submit Applications for Partial Payment on the form required by Owner with itemized data typed on 8 1/2 x 11 inch white paper continuation sheets.
2. Provide itemized data on continuation sheet: Format, schedules, line items and values: Those of the Schedule of Values accepted by the Engineer.

C. Preparation of Application for Each Progress Payment:
1. Application Form:
   a. Fill in required information, including that for Change Orders executed prior to the date of submittal of application.
   b. Fill in summary of dollar values to agree with the respective totals indicated on the continuation sheets.

c. Execute certification with the signature of a responsible officer of the contract firm.

2. Continuation Sheets:
   a. Fill in total list of all scheduled component items of work, with item number and the scheduled dollar value for each item.
   b. Fill in the dollar value in each column for each scheduled line item when work has been performed or products stored. Round off values to the nearest dollar, or as provided in the bid.
3. List each Change Order executed prior to the date of submission, at the end of the continuation sheets.
   a. List by Change Order and description, as for an original component item of work.
      1) Submit Applications for Payment to Owner at the times stipulated in the Agreement.
   b. Number: Four copies of each Application.

D. Substantiating Data:
1. When the Owner or Engineer require substantiating data, Contractor shall submit suitable information with cover letter identifying:
   a. Project.
   b. Application number and date.
   c. Detailed list of enclosures.
   d. For stored products: Item number and identification as shown on application.
   e. Description of specific material.
2. Submit one copy of data and cover letter for each copy of application.

E. Preparation of Application for Final Payment:
1. Fill in application form as specified for progress payments.
2. Use continuation sheet for presenting the final statement of accounting as specified in Section 01700 - Contract Closeout.

1.3 CHANGE ORDER PROCEDURES:

A. Format and Data Required:
1. Change Orders shall be prepared and submitted and will be processed in accordance with requirements of General Provisions and Funding Agency Requirements.
2. Engineer will transmit Certificate for Change to Owner and Agency for approval.
3. When Owner and Agency approval is received, Change Order will be included under next partial Application for Payment.

1.4 MEASURES AND WEIGHTS:

A. Contractor Assistance: To aid the Owner in determining all quantities, the Contractor shall, whenever so requested, provide scales, equipment and assistance for weighing or for measuring any of the materials at no cost to the Owner.

B. Weights and Measures: Quantities for payment will be the actual weight or actual measure, and no special or trade or so-termed customary allowances will be made, nor will any material, which is lost or misplaced, be included for payment.

C. Use of Plan Meter: For estimating quantities in which computation of areas by geometric methods would be comparatively laborious, it is agreed that the plan meter shall be considered an instrument of precision to the measurement of such areas.

D. Precedence of Dimensions: Figured dimensions on drawings shall take precedence over measurement by scale, and detailed working drawings are to take precedence over general drawings and shall be considered as explanatory of them and not as indicating extra work.

PART 2 - PRODUCTS (Not Applicable)

PART 3 - EXECUTION (Not Applicable)

END OF SECTION 01150

Section 01210

Allowances

PART 1 - GENERAL

1.01 SUMMARY

A. This Section includes administrative and procedural requirements governing allowances.

1. Certain materials and equipment are specified in the Contract Documents by allowances. In some cases, these allowances include installation. Allowances have been established in lieu of additional requirements and to defer selection of actual materials and equipment to a later date when additional information is available for evaluation. If necessary, additional requirements will be issued by Change Order.

B. Types of allowances include the following:

1. Lump-sum allowances.

C. Related Sections include the following:

1. Item 24 of Section B – Special Conditions in the ITB for Claims and Disputes.

1.02 SELECTION, PURCHASE, AND COORDINATION:

A. At the earliest practical date after award of the Contract, advise Engineer of the date when final selection and purchase of each product or system described by an allowance must be completed to avoid delaying the Work.

B. At Engineer's request, obtain proposals for each allowance for use in making final selections. Include recommendations that are relevant to performing the Work.

C. Purchase products and systems selected by Engineer from the designated supplier.

D. Contact Utility Companies and authorize engineering for line relocations, drops, connections, services, materials, and miscellaneous fees.

1.03 SUBMITTALS:

A. Submit proposals for purchase of products or systems included in allowances, in the form specified for Cost Proposals.

B. Submit invoices or delivery slips to show actual quantities of materials delivered to the site for use in fulfillment of each allowance.

C. Copy Engineer on all correspondence and invoices.

1.04 LUMP-SUM ALLOWANCES:

A. Allowances shall include cost to Contractor of specific products and materials ordered by Owner under allowance and shall include taxes, freight, and delivery to Project site.

B. Contractor's costs for receiving and handling at Project site, labor, coordination, installation (unless noted otherwise), incidental installation materials and equipment, overhead and profit, and similar costs related to products and materials ordered by Owner under allowance shall be included as part of the Contract Sum as part of the allowance.

PART 2 - PRODUCTS (Not Used)

PART 3 - EXECUTION

3.01 EXAMINATION:

A. Examine products covered by an allowance promptly on delivery for damage or defects. Return damaged or defective products to manufacturer for replacement.

B. Verify adequacy and conformance with plan requirements.

3.02 PREPARATION:

A. Coordinate materials and their installation for each allowance with related materials and installations to ensure that each allowance item is completely integrated and interfaced with related work.

3.03 PHASING:

Allow sufficient time for delivery and installation. Delays on behalf of other parties supplying materials or services shall not be justification for claims for delays or damages.

3.04 SCHEDULE OF ALLOWANCES:

A. Allowance Number One: For the purchase, delivery and installation of one new intercom system for the west gate, 2-360 degree security cameras mounted on light poles in the credit card parking lot and 2 -360 degree security cameras mounted on high mast light poles in the west apron

expansion. Includes integration with Air Operations Center (AOC) communications and security system.

B. **Allowance Number Two:** For the purchase, delivery and installation of a flush station on the OCWS 20" water main as detailed in the plans. Includes 20" water line, fitings, valves and concrete pad.

3.05 ACTUAL COSTS:

A. Engineer/Architect shall review and approve all cost proposals, materials, and planned utility allowance work limits for conformance with requirements. Only actual costs will be paid to the Contractor with no mark-up by Contractor (as specified in 1.04B). Cost overruns for allowances shall be paid by Change Order, if required.

END OF SECTION 01210

Section 01300

Submittals

PART 1 - GENERAL

1.1 SUBMITTALS BY CONTRACTOR:

A. Construction Progress Schedule.

B. Certifications as specified in the various sections.

C. Shop Drawings and Project Data as specified in the various sections.

D. Miscellaneous:
1. Weekly Payroll.
2. EEO Reports.
3. DBE Expenditure Report.
4. Safety Plan.
5. Security Plan.
6. Warranties and Bonds.
7. QC Plan.
8. Equipment Manuals
9. Other(s) as required.

1.2 PROGRESS SCHEDULE:

A. Bar-Chart Schedule: Submit a CPM or linear type bar-chart schedule seven (7) calendar days prior to the preconstruction conference date established for the work. On the schedule, indicate a time bar for each major category or unit of work to be performed at the site, properly sequenced and coordinated with other elements of work. Show completion of the work sufficiently in advance of the date established for substantial completion of work.
1. Superimpose an S-curve on the schedule to show the "estimated" total dollar-volume of work performed at any date during the contract time, with a column of cost figures in the left hand margin ranging from zero to the contract sum.
2. Submittal Tabulation: With the bar-chart submittal, submit tabulation, by date, of the submittals, which are required during the first 30 days of construction time. At the Contractor's option, submittal dates may be shown on the bar-chart schedule, in lieu of being tabulated.

B. Phasing: Arrange schedule with notations to show how sequence of work is affected by requirements for phased completion, limitations of continued utilization, non-interruptible services, use prior to substantial completion, site restrictions, runway and/or taxiway closures, provisions for future work, seasonal variations, environmental control, and similar provisions of total project. Phase I schedule is required at the preconstruction meeting. Each subsequent phasing schedule is required at least two weeks before the phase is to begin. Refer to other sections of the General Requirements and other contract documents for requirements.

C. Distribution: Following the initial submittal to and response by the Engineer, print and distribute progress schedules to the Engineer (3 copies), Owner, separate contractors, principal subcontractors and suppliers or fabricators, and others with a need-to-know schedule-

compliance requirement. Post copies in the project meeting room and temporary field office. When revisions are made, distribute updated issues to the same entities and post updated issues in the same locations. Delete entities from distribution when they have completed their assigned work and are no longer involved in the performance of scheduled work.

D. Update: Contractor shall update the schedule monthly for duration of construction.

1.3 SHOP DRAWINGS AND PRODUCT DATA:

A. Scope: Submit shop drawings, certifications, and product data for all products to be incorporated in the work.

B. Shop Drawings Shall:
1. Be original drawings, prepared by the Contractor, subcontractor, supplier, or distributor, which illustrate some portion of the work; showing fabrication, layout, setting, or erection details.
2. Be prepared by a qualified detailer.
3. Identify details by reference to sheet and detail numbers shown on Contract Drawings.

C. Product Data Shall:
1. Include manufacturer's standard schematic drawings. The Contractor shall:
   a. Modify drawings to delete information, which is not applicable to project.
   b. Supplement standard information to provide additional information applicable to project.
2. Include manufacturer's catalog sheets, brochures, diagrams, schedules, performance charts, illustrations and other standard descriptive data. The Contractor shall:
   a. Clearly mark each copy to identify pertinent materials or products.
   b. Show dimensions and clearances required.
   c. Show performance characteristics and capacities.

D. The Contractor Shall:
1. Be responsible for all submittals.
2. Review shop drawings and product data prior to submission
3. Verify:
   a. Field measurements.
   b. Field construction criteria.
   c. Catalog numbers and similar data.
4. Coordinate each submittal with the requirements of the work and of the Contract Documents.
5. Notify the Engineer, in writing at time of submission, of deviations in submittals from requirements of the Contract Documents.
6. Begin no work, which requires submittals until the return of submittals with the Engineer's stamp and initials or signature indicating review.
7. After the Engineer's review, distribute copies.

E. Contractor's Responsibilities:
1. Contractor's responsibility for errors and omissions in submittals is not relieved by the Engineer's review of submittals.
2. Contractor's responsibility for deviations in submittals from requirements of the Contract Documents is not relieved by the Engineer's review of submittal, unless the Engineer gives written acceptance of specific deviations.

F. Submission Requirements Include:
   1. The shop drawings shall be submitted in sufficient time to allow discussion and correction prior to beginning the work. Work shall not be performed nor materials ordered prior to the review of the drawings except at the Contractor's risk.
   2. Submit **6** copies of all shop drawings after which **4** copies will be returned for correction or marked reviewed as noted. Any drawings returned for correction must be resubmitted with same number of copies as required above. As an alternative, submittals/shop drawings may be submitted electronically in pdf format.
   3. All submittals must be accompanied by a transmittal letter, in duplicate, containing:
      a. Date.
      b. Project title and number.
      c. Contractor's name and address.
      d. The number of each shop drawing and product data submitted.
      e. Notification of deviations from Contract Documents.
      f. Other pertinent data.
   4. Submittals shall include the following, as applicable:
      a. Date and revision dates.
      b. Project title and number.
      c. The names of:
         1) Engineer.
         2) Contractor.
         3) Subcontractor.
         4) Supplier.
         5) Manufacturer.
         6) Separate detailer when pertinent.
      d. Identification of product or material.
      e. Relation to adjacent structure or materials.
      f. Field dimensions, clearly identified as such.
      g. Specification item or section number.
      h. Applicable standards, such as ASTM number or Federal Specification.
      i. A blank space, 5 in. x 5 in., for the Engineer's stamp.
      j. Identification of deviations from the Contract Documents.
      k. Contractor's stamp, initialed or signed, certifying Contractor's review of submittal, verification of field measurements, and compliance with Contract Documents.

G. Resubmission Requirements Include:
   1. Revision of initial drawings as required and resubmittal as specified for initial submittal.
   2. An indication on the drawings of any changes, which have been made, other than those requested by the Engineer.
   3. On product data resubmittals, include new data as required for initial submittal.

H. Distribution to Others: After review and approval, the Contractor shall distribute copies of shop drawings and product data which carry the Engineer's stamp to others as may be required.

I. Shop Drawings and Product Data:
   1. Submit notarized certifications cosigned by manufacturer/supplier and Contractor for:
      a. Storm drainage pipe, castings and structure materials.
      b. Fencing components.
      c. Pavement sub base, base, and surfacing and related materials.
      d. Grass seed.
      e. Structural concrete materials.
      f. Reinforcing steel.

g. Pavement marking paint.
h. Electrical wire and fixtures.
i. Lighting components.
j. All other products as required by the drawings, specifications, and Engineer.

2. Submit shop drawings, product data and steel placement plans for:
   a. All cast-in-place or precast structures.
   b. Catch basin and manhole grate cover and frame castings.
   c. Airport lighting equipment and materials.
   d. Concrete and asphalt mix designs.
   e. All other products as required by the drawings, specifications, and Engineer.

1.4 MISCELLANEOUS:

A. Equipment Manual: Prepare an Installation, Operation, and Maintenance Manual for all airport lighting and other installed as a part of this contract. This manual shall be a vinyl notebook with ring bound compilation of manufacturers' instructions and maintenance manuals. Prepare this manual, marking out sections, which do not apply, and present four (4) copies to the Owner through the Engineer after the final inspection is complete. Final payment will not be processed until the Owner has received and accepted the Manual.

B. Weekly Payrolls:
1. In accordance with Section 120 of the General Provisions submit certified weekly payrolls for prime contractor and all subcontractors working at project site.
2. Submit payrolls no later than 7 calendar days after pay period. Payrolls will be considered current if received within 10 calendar days after last workday of payroll workweek. A workweek is the seven day period between midnight Sunday and midnight the following Sunday.
3. The Contractor is responsible for submission of payrolls by his subcontractors.
4. Submit a typed summary sheet with each payroll submission listing by week when contractor and each subcontractor worked at site.
5. A payroll submission is only required for weeks when Contractor or subcontractor is actually working at the site.

C. EEO Reports:
1. Contractor shall submit Monthly Employment Utilization Report and Annual EEO-1 Report to the appropriate Federal Labor Area Office in accordance with Section 120 of the General Provisions. Submit copy of submittal to Owner for his records.
2. Prime Contractor shall insure that all his first tier subcontractors submit these reports and shall submit a sworn statement to Owner monthly certifying that all subcontractor reports have been submitted as required.

D. DBE Expenditure Reports: With each application for payment, the Contractor shall submit his DBE expenditure report indicating the name, date and amount disbursed to his DBE subcontractors for the period as well as for the project to date expenditure.

E. Security Plan: At preconstruction conference, submit for approval proposed security plan describing specifically how security will be maintained at each access point and work area by Contractor's forces.

F. Warranties and Bonds: Submit as specified in Section 01740.

PART 2 - PRODUCTS (Not Applicable)

PART 3 - EXECUTION (Not Applicable)

END OF SECTION 01300

Section 01400

Quality Control Services

PART 1 - GENERAL

1.1 RELATED DOCUMENTS: Drawings, General Provisions, Supplementary Conditions, Specifications, and other Contract Documents apply to work of this section.

1.2 DESCRIPTION OF REQUIREMENTS:

A. General: Required inspection and testing services are intended to assist in the determination of probable compliance of the work with requirements specified or indicated. These required services do not relieve the Contractor of responsibility for compliance with these requirements or for compliance with requirements of the Contract Documents.

B. Specified Inspection and Tests: Inspection, tests and related actions specified in this section and elsewhere in the Contract Documents are not intended to limit the Contractor's own quality control procedures which facilitate overall compliance with requirements of the Contract Documents.

C. Contractor Quality Control: Requirements for the Contractor to provide quality control services as required by the Engineer, the Owner, and the provisions of this section do not limit governing authorities or other authorized entities.

D. Contractor’s Quality Control Personnel and Laboratory: Contractor shall conform to the requirements of General Provisions Section 100 and all technical specifications as listed in this manual.

1.3 RESPONSIBILITIES:

A. Contractor Responsibilities: Contractor is responsible for his own quality control testing and inspection to insure the quality of his means and methods of construction will produce the specified quality of work, and for any tests and inspections required by regulatory agencies. Costs for these services shall be included in the contract sum. The Contractor may employ and pay an independent agency, testing laboratory or other qualified firm to perform quality control services specified, or qualified contractor personnel may perform these services.

B. The Contractor shall submit for Engineer's approval a Quality Control (QC) Plan delineating his methods for each item requiring inspections, tests, and similar services.

C. Quality Assurance: The Owner will engage and pay for the services of an independent agency to perform inspections and tests of materials for Quality Assurance. The Owner’s quality assurance testing shall in no way relieve the Contractor of the responsibility for providing the quality materials, workmanship and testing required to comply with these specifications.

D. Retest Responsibility: Where results of required inspections, tests, or similar services prove unsatisfactory and do not indicate compliance with the requirements of the Contract

Documents, then retests are the responsibility of the Contractor, and shall be deducted from monies due the Contractor on his monthly pay request, regardless of whether the original test was the Contractor's responsibility. Retesting of work revised or replaced by the Contractor is the Contractor's responsibility, where required tests were performed on original work.

E. Responsibility for Associated Services: The Contractor is required to cooperate with the independent agencies performing required inspections, tests, and similar services. Provide such auxiliary services as are reasonably requested. Notify the testing agency sufficiently in advance of operations to permit assignment of personnel. These auxiliary services include but are not necessarily limited to the following:

1. Providing access to the work.
2. Taking samples or providing assistance with taking samples.
3. Delivery of samples to test laboratories.
4. Security and protection of samples and test equipment at the project site.
5. Surveying services required establishing horizontal and vertical location of tests by Engineer's quality assurance testing laboratory.

1.4 SCHEDULE OF SERVICES: Each specification section identifies principal inspections, tests and similar services required by the Contractor Documents.

PART 2 - PRODUCTS (Not Applicable)

PART 3 - EXECUTION

3.1 REPAIR AND PROTECTION: Upon completion of inspection, testing, sample-taking, and similar services performed on the work, repair damaged work and test sites to eliminate deficiencies. Protect work exposed by or for quality control service activities, and protect repaired work. Repair and protection is the Contractor's responsibility, regardless of the assignment of responsibility for inspection, testing or similar services.

3.2 MEASUREMENT AND PAYMENT: No measurement or payment will be made for work in this section; it will be considered as incidental cost to the various other items of work.

END OF SECTION 01400

Section 01510

Temporary Facilities

PART 1 - GENERAL

1.1 DESCRIPTION:

A. Contractor shall furnish, install and maintain temporary utilities required for construction and other temporary facilities as indicated; remove on completion of work.

B. No construction shall be started until the Engineer's field office is erected, furnished as herein specified, and made available to the Engineer. The office shall be erected at a location designated by the Engineer and shall be separate from any building used by the Contractor.

C. Related requirements are specified in other sections of the specifications.

1.2 REQUIREMENTS OF REGULATORY AGENCIES:

A. Comply with National Electric Code.

B. Comply with Federal, State, and Local codes and regulations and with utility company requirements.

PART 2 - PRODUCTS

2.1 MATERIALS, GENERAL: Materials, furniture, and equipment may be new or used, but must be adequate in capacity for the required usage, must not create unsafe conditions, and must not violate requirements of applicable codes and standards. The Engineer will determine acceptability of all items.

PART 3 - EXECUTION

3.1 TEMPORARY ELECTRICITY AND LIGHTING: Provide temporary electrical service required for power and lighting, and pay all costs for service and for power used.

3.2 TEMPORARY WATER:

A. Provide water for construction purposes; pay all costs for installation, maintenance and removal, and service charges for water used.

B. The site is served by an onsite well or municipal water system The Contractor shall make arrangements for securing and providing necessary water as required for the performance of the work.

3.3 TEMPORARY SANITARY FACILITIES:

A. Provide sanitary facilities in compliance with laws and regulations.

B. Service, clean and maintain facilities and enclosures.

3.4 TEMPORARY SUPPORT FACILITIES:

A. General: Provide reasonably neat and uniform in appearance temporary support facilities acceptable to the Engineer and the Owner.

B. Sitting: Locate field offices, storage and fabrication sheds and other support facilities for easy access to the work. Position office so that windows give the best possible view of construction activities.

C. Maintenance: Maintain field offices, on-site plants, storage and fabrication sheds, temporary sanitary facilities, waste collection and disposal systems, and project identification and temporary signs until near substantial project completion. Immediately prior to substantial completion remove these facilities

D. Testing Laboratory: Furnish a building or trailer at the asphalt concrete plant(s) for performing asphalt concrete quality assurance testing. The building or trailer shall be equipped with all necessary equipment and supplies to sample and conduct all required plant testing. The laboratory shall meet FDOT and OSHA regulations.

E. Airfield Communications:
1. Contractor shall furnish his construction personnel with sufficient truck and hand-held radios to monitor Eglin Ground Control. The Contractor shall furnish 1 hand-held radio(s) for use by the Engineer. All radios shall be capable of two-way communications with ATC and shall be Communication Specialists, TR-720 Handheld AM Transceivers or approved equal. When working within active runway or taxiway safety areas, project superintendents shall be in constant radio contact with ATC and shall be responsible for controlling the movement of project equipment, vehicles and personnel.
2. Provide the following accessories: 114 VAC wall charger, plug-in earphone, car cigarette lighter DC charger, one spare battery, case with belt loop, antenna, and operating manual. Radio shall cover Aviation NAV band 108-118 mH, and COM band 118-136 mH.
3. All radios will remain the property of the Contractor.
4. The Contractor will not be directly compensated for providing two-way radios as this work is considered incidental to the work covered by the various contract items.
5.

F. Staging Area: Contractor shall prepare his staging area and access road by grading, drainage, and placing a four (4) inch thick stone base of coarse aggregate (#57 stone) over the entire staging area and access road(s). The Contractor shall apply a periodic top dressing to the stone base in order to minimize any fugitive dust or mud during the construction period. Upon completion of the project, the stone base shall be completely removed, the site graded to drain, and then turfed in accordance with Section 570 of the FDOT Standard Specifications.

G. Access and Haul Roads:

1. Locations of access and haul roads will be approved by the Engineer and are shown on the drawings These roads will be located to minimize conflict with Airport operations and shall be maintained, well defined, and confined to the minimum area required. Damaged roads shall be promptly repaired by the Contractor to the satisfaction of the Engineer at no cost to the Owner.
2. The Contractor shall utilize existing construct the access and haul roads and shall maintain the roads as required to create no dust. All project traffic must be routed through these areas. The Contractor shall provide all markings required to clearly define the access and haul roads.
3. The Contractor will be responsible for obtaining any necessary driveway permit(s) from local or state agencies for access and haul roads.
4. If access or haul roads cross a utility, the Contractor shall protect the utility as directed by the Owner of the utility.
5. There shall be no direct payment for the construction, maintenance, and removal of access and haul roads.

H. Facilities for Night Work:
1. To perform construction activities at night, Contractor shall furnish, install and maintain temporary construction lights to illuminate night work areas during hours of darkness. The equipment used for lighting shall provide a sufficient amount of light to illuminate the work areas satisfactorily for construction and inspection. The Contractor may be required to provide additional lighting units, as directed by the Engineer. Upon completion of each nighttime operation, the lighting equipment shall be removed from the construction area and stored in the Contractor's storage area.
2. The Contractor will be required to coordinate lighting positions with ATC prior to any night work. This coordination will be accomplished and requested through the Engineer.
3. No direct payment shall be made for this item.

3.5 EXECUTION, GENERAL: Maintain and operate systems to assure continuous service.

3.6 REMOVAL:

A. Completely remove temporary materials and equipment when their use is no longer required.

B. Clean and repair damage caused by temporary installations or use of temporary facilities. Restore grassed and paved areas to their pre-construction condition.

3.7 MEASUREMENT AND PAYMENT: There shall be no separate measurement and payment for Temporary Facilities. All provisions and removal costs shall be included in Item C-105, Mobilization or the various other items of work.

END OF SECTION 01510

Section 01530

Temporary Barricades

PART 1 - GENERAL

1.1 DESCRIPTION:

A. Provide temporary barricades and as required for safety of aircraft and contractor's work forces, and to maintain use of the various portions of the air operations area during construction.

B. Comply with referenced FAA Advisory Circulars and the safety and staging plan.

C. Related work specified elsewhere:
   1. Construction safety: General Provisions and General Requirements.
   2. Staging and safety plan: Contract Drawings and General Requirements.

PART 2 - PRODUCTS

2.1 BARRICADES:

A. Low Profile Barricades: Plastic, with alternating diagonal 4" wide reflective white and orange stripes and one battery powered flashing or steady burning red light as shown in the drawings with lights spaced at no more than 10 ft.. Low profile barricades shall be no more than 18 inches high and water filled or anchored with sand bags. An alternate type II barricade that meets the requirements in FAA A/C 150/5370-2G may be used when approved by the Engineer.

B. High Profile Barricade: 48 inch high by 24 inch wide by 6 foot long as shown in the drawings and are to be water fillable plastic or concrete. Barricade sections shall be alternating orange and white, or have a battery powered flashing yellow light. These barricades are to be used where shown on the drawings and may be used outside the runway obstacle free zone (ROFZ) and taxiway object free area (TOFA).

PART 3 - EXECUTION

3.1 GENERAL:

A. Install at locations shown on the drawings and where directed by Engineer. Generally, place barricades a maximum of 25 feet on centers or as indicated on the drawings. Anchor barricades and markers with sandbags or other methods approved by Engineer.

B. Maintain barricades until removal is directed by Engineer. The barricade flasher batteries shall be checked daily to insure that flashers are operational. Replace batteries as required.

C. Remove barricades and markers as directed by Engineer. Repair any damage to pavement or surrounding area caused by markers or barricades.

3.2 MEASUREMENT AND PAYMENT: Barricades and barricade lights will not be measured. Payment will be on a lump sum basis for all barricades and barricade lights furnished, installed, moved, and reused at different locations. The payment shall be full compensation for providing all labor, materials, maintenance, batteries, and sandbags; and removal, repair and reuse of the barricades, closed runway markers, and runway number covers as shown on the drawings.

Payment will be made under:

01530 Temporary Barricades and Barricade Lights --- per Lump Sum

.

END OF SECTION 01530

Section 01600

Materials and Equipment

PART 1 - GENERAL

1.1 REQUIREMENTS:

A. Material, Equipment, and Products Incorporated into the Work shall conform to applicable specifications and standards; shall comply with size, make, type and quality specified, or as specifically approved in writing by the Engineer; and shall not be used for any purpose other than that for which it is designed or is specified.

B. Manufactured and Fabricated Products shall be designed, fabricated and assembled in accordance with the best engineering and shop practices. Like parts of duplicate units shall be manufactured to standard sizes and gages, to be interchangeable. Products shall be suitable for service conditions. Equipment capacities, sizes and dimensions shown or specified shall be adhered to unless Engineer specifically approves variations in writing.

C. Related Requirements in Other Parts of the Project Manual: Conditions of the Contract.

D. Standardization: Unless otherwise approved by the Engineer, items and equipment of a similar type and function shall be furnished by one manufacturer to standardize on replacement parts, service calls, operation and maintenance matters, and to avoid a division of responsibility among several manufacturers.

E. A single supplier shall be used on principal items of equipment and systems where one or more components are not manufactured by the principal supplier; this is required to place performance and service responsibilities for the entire unit or system with only one supplier or manufacturer.

1.2 PRODUCTS SUBSTITUTIONS AND OPTIONS:

A. Products List: Contractor shall submit a complete list of products to be incorporated into the work (with the name of the installing contractor) at the Preconstruction Conference required by these specifications.

B. Contractor's Options:
   1. For products specified only by reference standard, select any product meeting that standard.
   2. For products specified by naming several products or manufacturers, select any one of the products or manufacturers named, which complies with the specifications.
   3. Airport lighting equipment covered by FAA specifications require certification under the Airport Lighting Equipment Certification Program described in Advisory Circular 150/5345-53, latest edition. Select equipment from the Certified Airport Lighting Equipment list appended to the Advisory Circular. An updated list is published biannually.

C. Product Substitutions: Contractor shall submit, at the Preconstruction Conference, all requests for product substitutions. No requests for substitutions will be accepted from manufacturers or suppliers.

Submit a separate written request for each product, supported with complete data, with drawings and samples as appropriate, including:

1. Comparison of the qualities of the proposed substitution with the product specified.
2. Changes required in other elements of the work because of the substitution.
3. Effect on the construction schedule.
4. Cost data comparing the proposed substitution with the product specified.
5. Any required license fees or royalties.
6. Availability of maintenance service, and source of replacement materials.

Engineer shall be the judge of the equality and acceptability of the proposed substitution. If Engineer determines the proposed substitute product is not "equal" to the specified product, the Contractor must provide the specified product, subject to Engineer's shop drawing review and approval.

No further requests for substitutions will be considered after Preconstruction Conference.

D. Contractor's Representation: A request for a substitution constitutes a representation that Contractor:

1. Has investigated the proposed product and determined that it is equal to or superior in all respects to that specified.
2. Will provide the same warranties or bonds for the substitution as for the product specified.
3. Will coordinate the installation of an accepted substitution into the work, and make such other changes as may be required to make the work complete in all respects.
4. Waives all claims for additional costs, under his responsibility, which may subsequently arise.

E. Engineer's Review: Engineer will review requests for substitutions with reasonable promptness and notify Contractor, in writing, of the decision to accept or reject the requested substitution.

1.3 MANUFACTURER'S INSTRUCTIONS:

A. Printed Instructions: When Contract Documents require that installation of work shall comply with manufacturer's printed instructions, Contractor shall obtain and distribute copies of such instructions to parties involved in the installation, including copies to Engineer. Maintain one set of complete instructions at the job site during installation and until completion and acceptance.

B. Strict Compliance: Handle, install, connect, clean, condition, and adjust products in strict accord with such instructions and in conformity with specified requirements. Should job conditions or specified requirements conflict with manufacturer's instruction, consult with Engineer for further instructions. Do not proceed with work without clear instructions.

C. Complete Compliance: Perform work in accord with manufacturer's instructions. Do no omit any preparatory step or installation procedure unless specifically modified or exempted by Contract Documents.

1.4 TRANSPORTATION AND HANDLING:

A. Deliveries: Contractor shall arrange deliveries of products in accord with construction schedules; coordinate to avoid conflict with work and conditions at the site. Deliver products in undamaged condition, in manufacturer's original containers or packaging, with identifying labels intact and legible. Immediately on delivery, inspect shipments to assure compliance with requirements of contract documents and approved submittals, and that products are properly protected and undamaged.

B. Handling: Provide equipment and personnel to handle products by methods to prevent soiling or damage of products or packaging.

1.5 STORAGE AND PROTECTION:

A. Storage: Store products in accord with manufacturer's instructions, with seals and labels intact and legible. Store products subject to damage by the elements in weather tight enclosures. Maintain temperature and humidity within the ranges required by manufacturer's instructions.

B. Exterior Storage: Store fabricated products above the ground, on blocking or skids; prevent soiling or staining. Cover products, which are subject to deterioration with impervious sheet coverings; provide adequate ventilation to avoid condensation.

Store loose granular materials in a well-drained area on solid surfaces to prevent mixing with foreign matter.

C. Storage Inspection: Arrange storage in a manner to provide easy access for inspection. Make periodic inspections of stored products to assure that products are maintained under specified conditions, and free from damage or deterioration.

D. Protection after Installations: Provide substantial coverings as necessary to protect installed products from damage from traffic and subsequent construction operations. Remove when no longer needed.

PART 2 - PRODUCTS (Not Applicable)

PART 3 - EXECUTION (Not Applicable)

END OF SECTION 01600

Section 01700

Contract Closeout

PART 1 - GENERAL

REQUIREMENTS:

Comply with requirements stated in conditions of the contract and in specifications for administrative procedures in closing out the work.

Related requirements in other parts of the Project Manual including fiscal provisions, legal submittals and additional administrative requirements: Conditions of the contract.

Related requirements specified in other sections:

1. Closeout submittals required of trades: The respective sections of specifications.
2. Project Record Documents: Section 01720.
3. Warranties and Bonds: Section 01740.

SUBSTANTIAL COMPLETION: The conditions and procedures for inspection and Contractor's, Engineer's and Owner's responsibilities pertaining to substantial completion are as specified in the General Provisions and in the Supplementary Conditions.

PART 2 - PRODUCTS (Not Used)

PART 3 - EXECUTION

FINAL INSPECTION: Shall be in accordance with conditions and procedures outlined in the Contract Documents. When Engineer finds that the work is acceptable under the Contract Documents, he will request required Contractor's Closeout Submittals.

REINSPECTION FEES: Should Engineer perform reinspections due to failure of the work to comply with the claims of status of completion made by the Contractor, the Owner will compensate Engineer for such additional services. The Owner will deduct the amount of such compensation from the final payment due the Contractor.

CONTRACTOR'S CLOSEOUT SUBMITTALS TO ENGINEER:

Evidence of compliance with requirements of governing authorities: Certificates of Inspection.

Project Record Documents: Conform to requirements of Section 01720.

Warranties and Bonds: Conform to requirements of Section 01740.

Evidence of payment and release of liens: To requirements of General Provisions and Supplementary Conditions.

Certificates of Insurance for products and completed operations.

Once the Engineer has determined the work is acceptable under the Contract Documents, he will furnish the Contractor appropriate number of copies of the following forms, copies of which are attached:

1. Contractor Warranty Form
2. Affidavit of Payment
3. Affidavit of Release of Liens
4. Final Waiver of Lien
5. Consent of Surety for Final Payment
6. Final DBE Participation Report
7. Advertisement of Completion

PAYMENT: No separate payment will be made under this section for work described or specified herein.

END OF SECTION 01700

AFFIDAVIT OF PAYMENT

To All Whom It May Concern:

WHEREAS, the undersigned has been employed by **CONTRACTOR** to furnish labor and materials for **PROJECT** work, under a contract for the improvement of property described as **PROJECT** in the **CITY** County of **COUNTY**, State of **Florida** of which **OWNER** is the Owner,

NOW, THEREFORE, this _____ day of _____, 20____,

The undersigned, as the Contractor for the above-named Contract pursuant to the Conditions of the Contract hereby certifies that to the best of his knowledge, information and belief, except as listed below, the Releases or Waivers of Lien attached hereto include the Contractor, all Subcontractors, all suppliers of materials and equipment, and all performers of Work, labor or services, who have or may have liens against any property of the Owner arising in any manner out of the performance of the Contract referenced above.

EXCEPTIONS: (If none, write "None". If required by the Owner, the Contractor shall furnish bond satisfactory to the Owner for each exception.)

ATTACHMENTS:

1. Consent of Surety to Final Payment. (Whenever Surety is involved, Consent of Surety is required.)
2. Contractor's Release or Waiver of Liens, conditional upon receipt of final payment.
3. Separate Releases or Waivers of Liens from Subcontractors and material and equipment suppliers.
4. Contractor's Affidavit of Release of Liens.

_____

CONTRACTOR (Name of sole ownership, corporation or partnership)

_____

(Signature of Authorized Representative)

(Affix corporate seal here)

_____

TITLE

AFFIDAVIT OF RELEASE OF LIEN

To All Whom It May Concern:

WHEREAS, the undersigned has been employed by **CONTRACTOR** to furnish labor and materials for **PROJECT** work, under a contract for the improvement of property described as **PROJECT** in the **CITY** County of **COUNTY**, State of **Florida** of which **OWNER** is the Owner,

NOW, THEREFORE, this _____ day of _____, 20___,

The undersigned, as the Contractor for the above-named Contract pursuant to the Conditions of the Contract hereby certifies that to the best of his knowledge, information and belief, except as listed below, the Releases or Waivers of Lien attached hereto include the Contractor, all Subcontractors, all suppliers of materials and equipment, and all performers of Work, labor or services, who have or may have liens against any property of the Owner arising in any manner out of the performance of the Contract referenced above.

EXCEPTIONS: (If none, write "None". If required by the Owner, the Contractor shall furnish bond satisfactory to the Owner for each exception.)

ATTACHMENTS:

1. Contractor's Release or Waiver of Liens, conditional upon receipt of final payment.
2. Separate Releases or Waivers of Liens from Subcontractors and material and equipment suppliers.

_____

SUBCONTRACTOR (Name of sole ownership, corporation or partnership)

_____

(Signature of Authorized Representative)

(Affix corporate seal here)

_____

TITLE

FINAL WAIVER OF LIEN

To All Whom It May Concern:

WHEREAS, the undersigned has been employed by **CONTRACTOR** to furnish labor and materials for **PROJECT** work, under a contract for the improvement of property described as **PROJECT** in the **CITY** County of **COUNTY**, State of **Florida** of which **OWNER** is the Owner,

NOW, THEREFORE, this _____ day of _____, 20___.

for and in consideration of the sum of _____ Dollars paid simultaneously herewith, the receipt whereof is hereby acknowledged by the undersigned, the undersigned does hereby waive and release any lien rights to, or claim of lien with respect to and on said above-described premises, and the improvements thereon, and on the monies or other considerations due to become due from the owner, on account of labor, services, material, fixtures, apparatus of machinery heretofore or which may hereafter be furnished by the undersigned to or for the above-described premises by virtue of said contract.

_____

CONTRACTOR (Name of sole ownership, corporation or partnership)

_____

(Signature of Authorized Representative)

(Affix corporate seal here)

_____

TITLE

CONTRACTOR WARRANTY FORM

Project Name **PROJECT**

Location **LOCATION**

Owner **OWNER**

We, **CONTRACTOR**, Contractor for the above referenced project, do hereby warrant that all labor and materials furnished and work performed are in accordance with the Contract Documents and authorized modifications thereto, and will be free from defect due to defective materials or workmanship for a period of one year from Date of Substantial Completion. This warranty commences on

_____
(Date of Substantial Completion Affixed by Engineer)

and expires on :

_____
(One Year From Commencement Date)

This warranty covers that portion of the project described below:

Should any defect develop during the warranty period due to improper materials, workmanship or arrangement, the defect shall, upon written notice by the Owner, be made good by the Undersigned at no expense to the Owner.

Nothing in the above shall be deemed to apply to work which has been abused or neglected by the Owner.

_____
Date

_____
CONTRACTOR (Name of sole ownership, corporation or partnership)

_____
(Signature of Authorized Representative)

(Affix corporate seal here)

_____
TITLE

CONSENT OF SURETY FOR FINAL PAYMENT

Project Name **PROJECT**

Location **LOCATION**

Owner **OWNER**

Type of Contract **Construction**

Amount of Contract $_____

In accordance with the provisions of the above-named contact between the Owner and the Contractor, the following named surety:

SURETY

on the Payment Bond of the following named Contractor:

CONTRACTOR

hereby approves of final payment to the Contractor, and further agrees that said final payment to the Contractor shall not relieve the Surety Company named herein of any of its obligations to the following named Owner: as set forth in said Surety company's bond:

OWNER

IN WITNESS WHEREOF, the Surety Company has hereunto set its hand and seal this DAY day of MONTH 20____.

_____

SURETY

_____

(Signature of Authorized Representative)

(Affix corporate seal here)

_____

TITLE

IF SIGNED BY ATTORNEY-IN-FACT, POWER OF ATTORNEY MUST BE ATTACHED.

ADVERTISEMENT OF COMPLETION

_____
(Contractor)

_____
(Address)

gives notice of completion of _____
(Project)

and sets _____ as the date of final settlement.

All persons and firms should file all claims for payment to the below address prior to the settlement date:

Okaloosa County (Owner)
ATTN: Contracts and Leases Coordinator
5479A Old Bethel Road
Crestview FL 32536

By: _____ (Name)

_____ (Title)

Leg: _____ _____ (Publication Dates)

Section 01710

Cleaning and Disposal

PART 1 - GENERAL

1.1 DESCRIPTION: Contractor shall execute cleaning during progress of the work and at completion of the work as required by the General Provisions and other specification documents.

1.2 DISPOSAL REQUIREMENTS:

A. Conduct cleaning and disposal operations to comply with all local, state and federal codes, ordinances, regulations, and anti-pollution laws; and with airport and construction safety requirements.

B. All disposals of waste materials shall be off airport property at locations approved by the Engineer.

C. Contractor shall be responsible for arranging for and obtaining off-site disposal areas, including payment for all costs associated with such disposal.

1.3 SUBMITTALS: Prior to beginning work, submit a Disposal Plan for the satisfactory disposal of all waste materials and debris.

Submit two (2) copies of the disposal site owner's written permission for such disposal with Disposal Plan.

PART 2 - PRODUCTS

2.1 MATERIALS:

A. Use only those cleaning materials which will not create hazards to health or property and which will not damage surfaces.

B. Use only those cleaning materials and methods recommended by manufacturer of the surface material to be cleaned.

C. Use cleaning materials only on surfaces recommended by cleaning material manufacturer.

PART 3 - EXECUTION

3.1 CLEANING: Execute periodic cleaning to keep the work, site and adjacent properties free from accumulations of waste materials, rubbish, windblown debris, and dust resulting from

construction operations. Provide on-site containers for the collection of waste materials, debris and rubbish. Remove waste materials, debris and rubbish from the site periodically and dispose of at approved locations.

3.2 BARRIERS AND PROTECTION: Protect existing structures and vegetation from cleaning and disposal operations as required.

3.3 DUST CONTROL: Schedule cleaning and other operations so that dust and other contaminants resulting there from will not fall on wet or newly coated surfaces, will not damage or contaminate aircraft, and will not unduly affect the work of other airport tenants.

3.4 DISPOSAL OF DEBRIS AND WASTE MATERIALS:

A. If permitted by Owner and local, state and federal regulations, Contractor may dispose of combustible materials on-site by burning. Unguarded fires will not be permitted. Burning will be restricted as follows:
   1. Burning of poison oak, poison ivy or other plants of similar nature will be prohibited.
   2. Tires or other combustible waste material shall not be used to augment burning.
   3. Burning operations that may in any way be hazardous to air operations will not be allowed.

B. Non-combustible and waste materials and ashes shall be removed from the site and disposed of in accordance with the Disposal Plan.

3.5 PAYMENT**:** No separate payment will be made under this section for work described or specified herein.

END OF SECTION 01710

Section 01720

Project Record Document

PART 1 - GENERAL

1.1 GENERAL REQUIREMENTS:

A. Contractor shall maintain at the site as specified herein for the Owner one record copy of:
   1. Drawings.
   2. Specifications.
   3. Addenda.
   4. Change orders and other modifications.
   5. Engineer field orders or written instructions.
   6. Approved shop drawings, product data and samples.
   7. Field test records.
   8. Laboratory test records.

B. Related requirements in other parts of the Project Manual: Conditions of the Contract.

PART 2 - PRODUCTS (Not Used)

PART 3 - EXECUTION

3.1 MAINTENANCE OF DOCUMENTS AND SAMPLES:

A. Store record documents and samples in Contractor's field office apart from documents used for construction.

B. File documents and samples in accordance with data filing format of the Construction Specifications Institute - MASTERFORMAT.

C. Maintain documents in a clean, dry, legible condition and in good order. Do not use record documents for construction purposes.

D. Make documents and samples available at all times for inspection by Engineer.

3.2 RECORDING:

A. Stamp or label each document "PROJECT RECORDS" in 3/4-inch letters.

B. During daily progress of the work, the job superintendent for the Contractor shall record information concurrently with construction progress.

Do not conceal any work until required information is recorded.

C. Drawings: Legibly mark to record actual construction in color codes designated by the Engineer.

D. All field data for record information shall be obtained by a surveyor who is a Registered Land Surveyor (RLS) in the state of Florida.

E. Record Information includes but is not limited to the following:

1. Topographic survey of all areas within the limits of construction. Ground shots will be taken on a minimum 50 foot grid and at all grade changes.

2. Depths of various elements of foundation in relation to finish reference datum.
3. Horizontal and vertical locations of pavements and underground utilities and appurtenances, referenced to permanent surface improvements or finish reference datum.
4. Field changes of dimension and detail.
5. Changes made by field order or by change order.
6. Details not on original contract drawings.
7. Extent and dimensions of pavement removal.
8. Any other changes in the plans.
9. Storm drainage system construction:
    a. Exact distance between all catch basins, manholes, points of intersection, and line terminals or headwalls.
    b. The invert elevation of the end of all pipes, stub outs, and headwalls.
    c. The rim (top of frame) or top of grate and invert elevations of all manholes, catch basins, and other structures.
10. Electrical construction identification:
    a. Exact distance between all manholes and points of intersection.
    b. Exact size and location of duct bank or cable run and what circuits it feeds.
    c. Exact location of any lines abandoned in place.
    d. Exact location, type, and size of runway and taxiway edge lights, centerline lights, and/or touchdown zone lights.
    e. Rim and invert elevation of all manholes and duct banks.
    f. Depth of cover on direct burial lines.
    g. Locations of cable splices.
    h. Location and description of signs.

F. Specifications and addenda: Legibly mark each section to record:
1. Manufacturer, trade name, catalog number, and supplier of each product and item of equipment actually installed.
2. Changes made by field order or by change order.

G. All horizontal control dimensions shall be to the nearest tenth of a foot. Elevations shall be to the nearest one-hundredth of a foot.

H. Set one (1) Concrete Benchmark and document location and elevation data.

3.3 SUBMITTAL:

A. Upon completion of the work as described in Section 01010 “Scope of Work”, the Contractor shall submit on hard copy and electronic media (AutoCAD 2013 or later from Autodesk), record drawings of all work completed to the Engineer. Record drawings shall include all elevation data points which shall be submitted in 3-d format and shall include, as a minimum the northing, easting, elevation (all in feet) and descriptor for each data point. The Engineer will

provide Contractor with AutoCAD drawings of all original construction drawings. Any design information in the drawings that has been changed shall be marked with a strike thru and as-built information shall be added such that the drawings contain the original design and the as-built configuration.

B. At the close of the job and prior to receipt of final payment, the Contractor shall deliver to the Engineer for the Owner two complete hard copy sets of Record Documents meeting the requirements of 3.3(A) plus the number of sets required by all regulatory agencies. The final Pay Request will not be processed until receipt and acceptance by the owner and all regulatory agencies of the record drawings for the project. **All hard copy submittals shall be signed and sealed by a Professional Land Surveyor licensed in the State of Florida.**

C. Accompany submittal with transmittal letter containing:
1. Date.
2. Project title and number.
3. Contractor's name and address.
4. Title and number of each record document.
5. Signature of Contractor or his authorized representative.

3.4 PAYMENT: Payment shall be made at the contract lump sum price for "Project Record Documents."

Payment will be made under:

Item 01720 Project Record Documents -- per lump sum

END OF SECTION 01720

Section 01740

Warranties and Bonds

PART 1 - GENERAL

1.1 GENERAL REQUIREMENTS:

A. Contractor shall:
1. Compile specified warranties and bonds.
2. Compile specified service and maintenance contracts.
3. Co-execute submittals to verify compliance with Contract Documents.
4. Review submittals to verify compliance with Contract Documents.
5. Submit to Engineer for review and transmittal to Owner.

B. Related requirements in other parts of the Project Manual:
1. Bid Bonds: Instructions to bidders.
2. Performance Bond and Payment Bond: Conditions of the contract.
3. General warranty of construction: Conditions of the contract.

C. Related requirements specified in other sections:
1. Warranties and Bonds required for specific products: Each respective section of specifications.
2. Provisions and duration of Warranties and Bonds: The respective section of specifications, which specifies the product.
3. Contract closeout: Section 01700
4. Equipment Manuals: Section 01300

PART 2 - PRODUCTS (Not Used)

PART 3 - EXECUTION

3.1 SUBMITTAL REQUIREMENTS:

A. Assemble warranties, bonds, and service and maintenance contracts, executed by each of the respective manufacturers, suppliers, and subcontractors.

B. Number of original signed copies required: Two (2) each.

C. Table of Contents: Neatly typed, in orderly sequence. Provide complete information for each item.
1. Product or work item.
2. Firm, with name of principal, address and telephone number.
3. Scope.
4. Date of beginning of warranty, bond, or service and maintenance contract.
5. Duration of warranty, bond, or service and maintenance contract.
6. Provide information for Owner's personnel:

a. Proper procedure in case of failure.
b. Instances, which might affect the validity of warranty or bond.

7. Contractor, name of responsible principal, address and telephone number.

3.2 FORM OF SUBMITTALS:

A. Prepare in duplicate packets.

B. Format:
1. Size 8 1/2 inches x 11 inches. Punch sheets for 3-ring binder. Fold larger sheets to fit into binders.
2. Cover: Identify each packet with typed or printed title "WARRANTIES AND BONDS". List:
a. Project title and number.
b. Owner's name.
c. Contractor's name and address.

C. Binders: Commercial quality, 3-ring, with durable and cleanable plastic covers.

3.3 TIME OF SUBMITTALS:

A. Submit within ten (10) days after date of substantial completion, and prior to final request for payment.

B. For items of work where acceptance is delayed materially beyond the date of substantial completion, provide updated submittal within ten (10) days after acceptance, listing the date of acceptance as the start of the warranty period.

3.4 SUBMITTALS REQUIRED: Submit warranties, bonds, and service and maintenance contracts as specified in the respective sections of specifications.

3.5 PAYMENT: No separate payment will be made under this section for work described or specified herein.

END OF SECTION 01740

GENERAL CONSTRUCTION ITEMS

BID DOCUMENTS

CONSTRUCT WEST APRON EXPANSION
AND INFRASTRUCTURE AT VPS

Item C-100

Contractor Quality Control Program (CQCP)

100-1 General. Quality is more than test results. Quality is the combination of proper materials, testing, workmanship, equipment, inspection, and documentation of the project. Establishing and maintaining a culture of quality is key to achieving a quality project. The Contractor shall establish, provide, and maintain an effective Contractor Quality Control Program (CQCP) that details the methods and procedures that will be taken to assure that all materials and completed construction required by this contract conform to contract plans, technical specifications and other requirements, whether manufactured by the Contractor, or procured from subcontractors or vendors. Although guidelines are established and certain minimum requirements are specified here and elsewhere in the contract technical specifications, the Contractor shall assume full responsibility for accomplishing the stated purpose.

The Contractor shall establish a CQCP that will:

a. Provide qualified personnel to develop and implement the CQCP.

b. Provide for the production of acceptable quality materials.

c. Provide sufficient information to assure that the specification requirements can be met.

d. Document the CQCP process.

The Contractor shall not begin any construction or production of materials to be incorporated into the completed work until the CQCP has been reviewed and approved by the Resident Project Representative (RPR). No partial payment will be made for materials subject to specific quality control (QC) requirements until the CQCP has been reviewed and approved.

The QC requirements contained in this section and elsewhere in the contract technical specifications are in addition to and separate from the quality assurance (QA) testing requirements. QA testing requirements are the responsibility of the RPR or Contractor as specified in the specifications.

A Quality Control (QC)/Quality Assurance (QA) workshop with the Engineer, Resident Project Representative (RPR), Contractor, subcontractors, testing laboratories, and Owner's representative must be held prior to start of construction. The QC/QA workshop will be facilitated by the Contractor. The Contractor shall coordinate with the Airport and the RPR on time and location of the QC/QA workshop. Items to be addressed, at a minimum, will include:

a. Review of the CQCP including submittals, QC Testing, Action & Suspension Limits for Production, Corrective Action Plans, Distribution of QC reports, and Control Charts.

b. Discussion of the QA program.

c. Discussion of the QC and QA Organization and authority including coordination and information exchange between QC and QA.

d. Establish regular meetings to discuss control of materials, methods and testing.

e. Establishment of the overall QC culture.

100-2 Description of program.

a. General description. The Contractor shall establish a CQCP to perform QC inspection and testing of all items of work required by the technical specifications, including those performed by subcontractors. The CQCP shall ensure conformance to applicable specifications and plans with respect to materials, off-

site fabrication, workmanship, construction, finish, and functional performance. The CQCP shall be effective for control of all construction work performed under this Contract and shall specifically include surveillance and tests required by the technical specifications, in addition to other requirements of this section and any other activities deemed necessary by the Contractor to establish an effective level of QC.

b. Contractor Quality Control Program (CQCP). The Contractor shall describe the CQCP in a written document that shall be reviewed and approved by the RPR prior to the start of any production, construction, or off-site fabrication. The written CQCP shall be submitted to the RPR for review and approval at least 10 calendar days before the CQCP Workshop. The Contractor's CQCP and QC testing laboratory must be approved in writing by the RPR prior to the Notice to Proceed (NTP).

The CQCP shall be organized to address, as a minimum, the following:

1. QC organization and resumes of key staff
2. Project progress schedule
3. Submittals schedule
4. Inspection requirements
5. QC testing plan
6. Documentation of QC activities and distribution of QC reports
7. Requirements for corrective action when QC and/or QA acceptance criteria are not met
8. Material quality and construction means and methods. Address all elements applicable to the project that affect the quality of the pavement structure including subgrade, subbase, base, and surface course. Some elements that must be addressed include, but is not limited to mix design, aggregate grading, stockpile management, mixing and transporting, placing and finishing, quality control testing and inspection, smoothness, laydown plan, equipment, and temperature management plan.

The Contractor must add any additional elements to the CQCP that is necessary to adequately control all production and/or construction processes required by this contract.

100-3 CQCP organization. The CQCP shall be implemented by the establishment of a QC organization. An organizational chart shall be developed to show all QC personnel, their authority, and how these personnel integrate with other management/production and construction functions and personnel.

The organizational chart shall identify all QC staff by name and function, and shall indicate the total staff required to implement all elements of the CQCP, including inspection and testing for each item of work. If necessary, different technicians can be used for specific inspection and testing functions for different items of work. If an outside organization or independent testing laboratory is used for implementation of all or part of the CQCP, the personnel assigned shall be subject to the qualification requirements of paragraphs 100-03a and 100-03b. The organizational chart shall indicate which personnel are Contractor employees and which are provided by an outside organization.

The QC organization shall, as a minimum, consist of the following personnel:

a. Program Administrator. The Contractor Quality Control Program Administrator (CQCPA) must be a full-time on-site employee of the Contractor, or a consultant engaged by the Contractor. The CQCPA must have a minimum of five (5) years of experience in QC pavement construction with prior QC experience on a project of comparable size and scope as the contract.

Included in the five (5) years of paving/QC experience, the CQCPA must meet at least one of the following requirements:

(1) Professional Engineer with one (1) year of airport paving experience.

(2) Engineer-in-training with two (2) years of airport paving experience.

(3) National Institute for Certification in Engineering Technologies (NICET) Civil Engineering Technology Level IV with three (3) years of airport paving experience.

(4) An individual with four (4) years of airport paving experience, with a Bachelor of Science Degree in Civil Engineering, Civil Engineering Technology or Construction.

The CQCPA must have full authority to institute any and all actions necessary for the successful implementation of the CQCP to ensure compliance with the contract plans and technical specifications. The CQCPA authority must include the ability to immediately stop production until materials and/or processes are in compliance with contract specifications. The CQCPA must report directly to a principal officer of the construction firm. The CQCPA may supervise the Quality Control Program on more than one project provided that person can be at the job site within two (2) hours after being notified of a problem.

b. QC technicians. A sufficient number of QC technicians necessary to adequately implement the CQCP must be provided. These personnel must be either Engineers, engineering technicians, or experienced craftsman with qualifications in the appropriate field equivalent to NICET Level II in Civil Engineering Technology or higher, and shall have a minimum of two (2) years of experience in their area of expertise.

The QC technicians must report directly to the CQCPA and shall perform the following functions:

(1) Inspection of all materials, construction, plant, and equipment for conformance to the technical specifications, and as required by paragraph 100-6.

(2) Performance of all QC tests as required by the technical specifications and paragraph100-8.

(3) Performance of tests for the RPR when required by the technical specifications.

Certification at an equivalent level of qualification and experience by a state or nationally recognized organization will be acceptable in lieu of NICET certification.

c. Staffing levels. The Contractor shall provide sufficient qualified QC personnel to monitor each work activity at all times. Where material is being produced in a plant for incorporation into the work, separate plant and field technicians shall be provided at each plant and field placement location. The scheduling and coordinating of all inspection and testing must match the type and pace of work activity. The CQCP shall state where different technicians will be required for different work elements.

100-4 Project progress schedule. Critical QC activities must be shown on the project schedule as required by Section 80, paragraph 80-03, *Execution and Progress*.

100-5 Submittals schedule. The Contractor shall submit a detailed listing of all submittals (for example, mix designs, material certifications) and shop drawings required by the technical specifications. The listing can be developed in a spreadsheet format and shall include as a minimum:

a. Specification item number

b. Item description

c. Description of submittal

d. Specification paragraph requiring submittal

e. Scheduled date of submittal

100-6 Inspection requirements. QC inspection functions shall be organized to provide inspections for all definable features of work, as detailed below. All inspections shall be documented by the Contractor as specified by paragraph 100-9.

Inspections shall be performed as needed to ensure continuing compliance with contract requirements until completion of the particular feature of work. Inspections shall include the following minimum requirements:

a. During plant operation for material production, QC test results and periodic inspections shall be used to ensure the quality of aggregates and other mix components, and to adjust and control mix proportioning to meet the approved mix design and other requirements of the technical specifications. All equipment used in proportioning and mixing shall be inspected to ensure its proper operating condition. The CQCP shall detail how these and other QC functions will be accomplished and used.

b. During field operations, QC test results and periodic inspections shall be used to ensure the quality of all materials and workmanship. All equipment used in placing, finishing, and compacting shall be inspected to ensure its proper operating condition and to ensure that all such operations are in conformance to the technical specifications and are within the plan dimensions, lines, grades, and tolerances specified. The CQCP shall document how these and other QC functions will be accomplished and used.

100-7 Contractor QC testing facility.

a. For projects that include Item P-401, Item P-403, and Item P-404, the Contractor shall ensure facilities, including all necessary equipment, materials, and current reference standards, are provided that meet requirements in the following paragraphs of ASTM D3666, *Standard Specification for Minimum Requirements for Agencies Testing and Inspecting Road and Paving Materials*:

- 8.1.3 Equipment Calibration and Checks;
- 8.1.9 Equipment Calibration, Standardization, and Check Records;
- 8.1.12 Test Methods and Procedures

b. For projects that include P-501, the Contractor shall ensure facilities, including all necessary equipment, materials, and current reference standards, are provided that meet requirements in the following paragraphs of ASTM C1077, Standard Practice for Agencies Testing Concrete and Concrete Aggregates for Use in Construction and Criteria for Testing Agency Evaluation:

- 7 Test Methods and Procedures
- 8 Facilities, Equipment, and Supplemental Procedures

100-8 QC testing plan. As a part of the overall CQCP, the Contractor shall implement a QC testing plan, as required by the technical specifications. The testing plan shall include the minimum tests and test frequencies required by each technical specification Item, as well as any additional QC tests that the Contractor deems necessary to adequately control production and/or construction processes.

The QC testing plan can be developed in a spreadsheet fashion and shall, as a minimum, include the following:

a. Specification item number (e.g., P-401)

b. Item description (e.g., Hot Mix Asphalt Pavements)

c. Test type (e.g., gradation, grade, asphalt content)

d. Test standard (e.g., ASTM or American Association of State Highway and Transportation Officials (AASHTO) test number, as applicable)

e. Test frequency (e.g., as required by technical specifications or minimum frequency when requirements are not stated)

f. Responsibility (e.g., plant technician)

g. Control requirements (e.g., target, permissible deviations)

The QC testing plan shall contain a statistically-based procedure of random sampling for acquiring test samples in accordance with ASTM D3665. The RPR shall be provided the opportunity to witness QC sampling and testing.

All QC test results shall be documented by the Contractor as required by paragraph 100-9.

100-9 Documentation. The Contractor shall maintain current QC records of all inspections and tests performed. These records shall include factual evidence that the required QC inspections or tests have been performed, including type and number of inspections or tests involved; results of inspections or tests; nature of defects, deviations, causes for rejection, etc.; proposed remedial action; and corrective actions taken.

These records must cover both conforming and defective or deficient features, and must include a statement that all supplies and materials incorporated in the work are in full compliance with the terms of the contract. Legible copies of these records shall be furnished to the RPR daily. The records shall cover all work placed subsequent to the previously furnished records and shall be verified and signed by the CQCPA.

Contractor QC records required for the contract shall include, but are not necessarily limited to, the following records:

a. Daily inspection reports. Each Contractor QC technician shall maintain a daily log of all inspections performed for both Contractor and subcontractor operations. These technician's daily reports shall provide factual evidence that continuous QC inspections have been performed and shall, as a minimum, include the following:

(1) Technical specification item number and description

(2) Compliance with approved submittals

(3) Proper storage of materials and equipment

(4) Proper operation of all equipment

(5) Adherence to plans and technical specifications

(6) Summary of any necessary corrective actions

(7) Safety inspection.

(8) Photographs and/or video

The daily inspection reports shall identify all QC inspections and QC tests conducted, results of inspections, location and nature of defects found, causes for rejection, and remedial or corrective actions taken or proposed.

The daily inspection reports shall be signed by the responsible QC technician and the CQCPA. The RPR shall be provided at least one copy of each daily inspection report on the work day following the day of record. When QC inspection and test results are recorded and transmitted electronically, the results must be archived.

b. Daily test reports. The Contractor shall be responsible for establishing a system that will record all QC test results. Daily test reports shall document the following information:

(1) Technical specification item number and description

(2) Test designation

(3) Location
(4) Date of test
(5) Control requirements
(6) Test results
(7) Causes for rejection
(8) Recommended remedial actions
(9) Retests

Test results from each day's work period shall be submitted to the RPR prior to the start of the next day's work period. When required by the technical specifications, the Contractor shall maintain statistical QC charts. When QC daily test results are recorded and transmitted electronically, the results must be archived.

100-10 Corrective action requirements. The CQCP shall indicate the appropriate action to be taken when a process is deemed, or believed, to be out of control (out of tolerance) and detail what action will be taken to bring the process into control. The requirements for corrective action shall include both general requirements for operation of the CQCP as a whole, and for individual items of work contained in the technical specifications.

The CQCP shall detail how the results of QC inspections and tests will be used for determining the need for corrective action and shall contain clear rules to gauge when a process is out of control and the type of correction to be taken to regain process control.

When applicable or required by the technical specifications, the Contractor shall establish and use statistical QC charts for individual QC tests. The requirements for corrective action shall be linked to the control charts.

100-11 Inspection and/or observations by the RPR. All items of material and equipment are subject to inspection and/or observation by the RPR at the point of production, manufacture or shipment to determine if the Contractor, producer, manufacturer or shipper maintains an adequate QC system in conformance with the requirements detailed here and the applicable technical specifications and plans. In addition, all items of materials, equipment and work in place shall be subject to inspection and/or observation by the RPR at the site for the same purpose.

Inspection and/or observations by the RPR does not relieve the Contractor of performing QC inspections of either on-site or off-site Contractor's or subcontractor's work.

100-12 Noncompliance.

a. The Resident Project Representative (RPR) will provide written notice to the Contractor of any noncompliance with their CQCP. After receipt of such notice, the Contractor must take corrective action.

b. When QC activities do not comply with either the CQCP or the contract provisions or when the Contractor fails to properly operate and maintain an effective CQCP, and no effective corrective actions have been taken after notification of non-compliance, the RPR will recommend the Owner take the following actions:

(1) Order the Contractor to replace ineffective or unqualified QC personnel or subcontractors and/or

(2) Order the Contractor to stop operations until appropriate corrective actions are taken.

MEASUREMENT AND PAYMENT

100-13 Basis of measurement and payment. No measurement for payment will be made for work required by this section. The cost of personnel, tests, facilities and documentation required to implement the CQCP shall be considered incidental to and included in the contract prices for the various other items of work.

REFERENCES

The publications listed below form a part of this specification to the extent referenced. The publications are referred to within the text by the basic designation only.

National Institute for Certification in Engineering Technologies (NICET)

ASTM International (ASTM)

ASTM C1077	Standard Practice for Agencies Testing Concrete and Concrete Aggregates for Use in Construction and Criteria for Testing Agency Evaluation
ASTM D3665	Standard Practice for Random Sampling of Construction Materials
ASTM D3666	Standard Specification for Minimum Requirements for Agencies Testing and Inspecting Road and Paving Materials

END OF ITEM C-100

Item C-102

Temporary Air and Water Pollution, Soil Erosion, and Siltation Control

DESCRIPTION

102-1. This item shall consist of temporary control measures as shown on the plans or as ordered by the Resident Project Representative (RPR) during the life of a contract to control pollution of air and water, soil erosion, and siltation through the use of silt fences, berms, dikes, dams, sediment basins, fiber mats, gravel, mulches, grasses, slope drains, and other erosion control devices or methods.

Temporary erosion control shall be in accordance with the approved erosion control plan; the approved Construction Safety and Phasing Plan (CSPP) and AC 150/5370-2, *Operational Safety on Airports During Construction*. The temporary erosion control measures contained herein shall be coordinated with the permanent erosion control measures specified as part of this contract to the extent practical to assure economical, effective, and continuous erosion control throughout the construction period.

Temporary control may include work outside the construction limits such as borrow pit operations, equipment and material storage sites, waste areas, and temporary plant sites.

Temporary control measures shall be designed, installed and maintained to minimize the creation of wildlife attractants that have the potential to attract hazardous wildlife on or near public-use airports.

MATERIALS

102-2.1 Grass. Grass that will not compete with the grasses sown later for permanent cover per Item T-901shall be a quick-growing species (such as ryegrass, Italian ryegrass, or cereal grasses) suitable to the area providing a temporary cover. Selected grass species shall not create a wildlife attractant.

102-2.2 Mulches. Mulches may be hay, straw, fiber mats, netting, bark, wood chips, or other suitable material reasonably clean and free of noxious weeds and deleterious materials per Item T-908. Mulches shall not create a wildlife attractant.

102-2.3 Fertilizer. Fertilizer shall be a standard commercial grade and shall conform to all federal and state regulations and to the standards of the Association of Official Agricultural Chemists.

102-2.4 Slope drains. Slope drains may be constructed of pipe, fiber mats, rubble, concrete, asphalt, or other materials that will adequately control erosion.

102-2.5 Silt fence. Silt fence shall consist of polymeric filaments which are formed into a stable network such that filaments retain their relative positions. Synthetic filter fabric shall contain ultraviolet ray inhibitors and stabilizers to provide a minimum of six months of expected usable construction life. Silt fence shall meet the requirements of ASTM D6461.

102-2.6 Other. All other materials shall meet commercial grade standards and shall be approved by the RPR before being incorporated into the project.

CONSTRUCTION REQUIREMENTS

102-3.1 General. In the event of conflict between these requirements and pollution control laws, rules, or regulations of other federal, state, or local agencies, the more restrictive laws, rules, or regulations shall apply.

The RPR shall be responsible for assuring compliance to the extent that construction practices, construction operations, and construction work are involved.

102-3.2 Schedule. Prior to the start of construction, the Contractor shall submit schedules in accordance with the approved Construction Safety and Phasing Plan (CSPP) and the plans for accomplishment of temporary and permanent erosion control work for clearing and grubbing; grading; construction; paving; and structures at watercourses. The Contractor shall also submit a proposed method of erosion and dust control on haul roads and borrow pits and a plan for disposal of waste materials. Work shall not be started until the erosion control schedules and methods of operation for the applicable construction have been accepted by the RPR.

102-3.3 Construction details. The Contractor will be required to incorporate all permanent erosion control features into the project at the earliest practicable time as outlined in the plans and approved CSPP. Except where future construction operations will damage slopes, the Contractor shall perform the permanent seeding and mulching and other specified slope protection work in stages, as soon as substantial areas of exposed slopes can be made available. Temporary erosion and pollution control measures will be used to correct conditions that develop during construction that were not foreseen during the design stage; that are needed prior to installation of permanent control features; or that are needed temporarily to control erosion that develops during normal construction practices, but are not associated with permanent control features on the project.

Where erosion may be a problem, schedule and perform clearing and grubbing operations so that grading operations and permanent erosion control features can follow immediately if project conditions permit. Temporary erosion control measures are required if permanent measures cannot immediately follow grading operations. The RPR shall limit the area of clearing and grubbing, excavation, borrow, and embankment operations in progress, commensurate with the Contractor's capability and progress in keeping the finish grading, mulching, seeding, and other such permanent control measures current with the accepted schedule. If seasonal limitations make such coordination unrealistic, temporary erosion control measures shall be taken immediately to the extent feasible and justified as directed by the RPR.

The Contractor shall provide immediate permanent or temporary pollution control measures to minimize contamination of adjacent streams or other watercourses, lakes, ponds, or other areas of water impoundment as directed by the RPR. If temporary erosion and pollution control measures are required due to the Contractor's negligence, carelessness, or failure to install permanent controls as a part of the work as scheduled or directed by the RPR, the work shall be performed by the Contractor and the cost shall be incidental to this item.

The RPR may increase or decrease the area of erodible earth material that can be exposed at any time based on an analysis of project conditions.

The erosion control features installed by the Contractor shall be maintained by the Contractor during the construction period.

Provide temporary structures whenever construction equipment must cross watercourses at frequent intervals. Pollutants such as fuels, lubricants, bitumen, raw sewage, wash water from concrete mixing operations, and other harmful materials shall not be discharged into any waterways, impoundments or into natural or manmade channels.

102-3.4 Installation, maintenance and removal of silt fence. Silt fences shall extend a minimum of 15 inches and a maximum of 18 inches above the ground surface. Posts shall be set no more than 6 feet on center. Filter fabric shall be cut from a continuous roll to the length required minimizing joints where possible. When joints are necessary, the fabric shall be spliced at a support post with a minimum 12-inch overlap and securely sealed. A trench shall be excavated approximately 4 inches deep by 4 inches wide on the upslope side of the silt fence. The trench shall be backfilled and the soil compacted over the silt fence

fabric. The Contractor shall remove and dispose of silt that accumulates during construction and prior to establishment of permanent erosion control. The fence shall be maintained in good working condition until permanent erosion control is established. Silt fence shall be removed upon approval of the RPR.

MEASUREMENT AND PAYMENT

102-4.1 Except where specified otherwise elsewhere in the specifications, there will be no direct payment for any work in connection with the requirements of this section; the work shall be considered incidental to demolition, clearing, grubbing, grading, excavation, embankment, or other operations.

REFERENCES

The publications listed below form a part of this specification to the extent referenced. The publications are referred to within the text by the basic designation only.

Advisory Circulars (AC)

AC 150/5200-33 *Hazardous Wildlife Attractants on or Near Airports*

AC 150/5370-2 *Operational Safety on Airports During Construction*

ASTM International (ASTM)

ASTM D6461 *Standard Specification for Silt Fence Materials*

United States Department of Agriculture (USDA)

FAA/USDA Wildlife Hazard Management at Airports, A Manual for Airport Personnel

END OF ITEM C-102

Item C-105

Mobilization

105-1 Description. This item of work shall consist of, but is not limited to, work and operations necessary for the movement of personnel, equipment, material and supplies to and from the project site for work on the project except as provided in the contract as separate pay items. It also includes providing the items required by the General Provisions, including any supplementary Conditions and General Requirements including but not limited to:

- **a.** The establishment of all temporary offices, buildings, fencing, staging areas, haul routes, and other facilities necessary for the work on the project;
- **b.** Performance bond, labor and materials bond;
- **c.** Insurance; and all other work and operations which must be performed or costs incurred prior to beginning work on the various items on the project site.

This item also includes all work outside the limits of construction that is necessary to demobilize and restores areas disturbed by the Contractor to their original condition including, but not limited to, pavement rehabilitation, grading, seeding, mulching, cleaning, and disposal.

105-2 Mobilization limit. Mobilization shall be limited to 10 percent of the total project cost.

105-3 Posted notices. Prior to commencement of construction activities, the Contractor must post the following documents in a prominent and accessible place where they may be easily viewed by all employees of the prime Contractor and by all employees of subcontractors engaged by the prime Contractor: Equal Employment Opportunity (EEO) Poster "Equal Employment Opportunity is the Law" in accordance with the Office of Federal Contract Compliance Programs Executive Order 11246, as amended; Davis Bacon Wage Poster (WH 1321) - DOL "Notice to All Employees" Poster; and Applicable Davis-Bacon Wage Rate Determination. These notices must remain posted until final acceptance of the work by the Owner.

105-4 Engineer/RPR field office. An Engineer/RPR field office is not required.

METHOD OF MEASUREMENT

105-5 Basis of measurement and payment. Based upon the contract lump sum price for "Mobilization" partial payments will be allowed as follows:

a. With first pay request, 25%.

b. When 25% or more of the original contract is earned, an additional 25%.

c. When 50% or more of the original contract is earned, an additional 40%.

d. After Final Inspection, Staging area clean-up and delivery of all Project Closeout materials as required by Section 90, paragraph 90-11, *Contractor Final Project Documentation,* the final 10%.

BASIS OF PAYMENT

105-6 Payment will be made under:

Item C-105 Mobilization

REFERENCES

The publications listed below form a part of this specification to the extent referenced. The publications are referred to within the text by the basic designation only.

Office of Federal Contract Compliance Programs (OFCCP)

Executive Order 11246, as amended

EEOC-P/E-1 – Equal Employment Opportunity is the Law Poster

United States Department of Labor, Wage and Hour Division (WHD)

WH 1321 – Employee Rights under the Davis-Bacon Act Poster

END OF ITEM C-105

Item C-110

Method of Estimating Percentage of Material Within Specification Limits (PWL)

110-1 General. When the specifications provide for acceptance of material based on the method of estimating percentage of material within specification limits (PWL), the PWL will be determined in accordance with this section. All test results for a lot will be analyzed statistically to determine the total estimated percent of the lot that is within specification limits. The PWL is computed using the sample average (X) and sample standard deviation (S_n) of the specified number (n) of sublots for the lot and the specification tolerance limits, L for lower and U for upper, for the particular acceptance parameter. From these values, the respective Quality index, Q_L for Lower Quality Index and/or Q_U for Upper Quality Index, is computed and the PWL for the lot for the specified n is determined from Table 1. All specification limits specified in the technical sections shall be absolute values. Test results used in the calculations shall be to the significant figure given in the test procedure.

There is some degree of uncertainty (risk) in the measurement for acceptance because only a small fraction of production material (the population) is sampled and tested. This uncertainty exists because all portions of the production material have the same probability to be randomly sampled. The Contractor's risk is the probability that material produced at the acceptable quality level is rejected or subjected to a pay adjustment. The Owner's risk is the probability that material produced at the rejectable quality level is accepted.

It is the intent of this section to inform the Contractor that, in order to consistently offset the Contractor's risk for material evaluated, production quality (using population average and population standard deviation) must be maintained at the acceptable quality specified or higher. In all cases, it is the responsibility of the Contractor to produce at quality levels that will meet the specified acceptance criteria when sampled and tested at the frequencies specified.

110-2 Method for computing PWL. The computational sequence for computing PWL is as follows:

a. Divide the lot into n sublots in accordance with the acceptance requirements of the specification.

b. Locate the random sampling position within the sublot in accordance with the requirements of the specification.

c. Make a measurement at each location, or take a test portion and make the measurement on the test portion in accordance with the testing requirements of the specification.

d. Find the sample average (X) for all sublot test values within the lot by using the following formula:

$$\mathbf{X = (x_1 + x_2 + x_3 + \ldots x_n) / n}$$

Where: X = Sample average of all sublot test values within a lot

$x_1, x_2, \ldots x_n$ = Individual sublot test values

n = Number of sublot test values

e. Find the sample standard deviation (S_n) by use of the following formula:

$$\mathbf{S_n = [(d_1^2 + d_2^2 + d_3^2 + \ldots d_n^2)/(n-1)]^{1/2}}$$

Where: S_n = Sample standard deviation of the number of sublot test values in the set

$d_1, d_2, \ldots d_n$ = Deviations of the individual sublot test values $x_1, x_2, \ldots$ from the average value X

that is: $d_1 = (x_1 - X)$, $d_2 = (x_2 - X) \ldots d_n = (x_n - X)$

n = Number of sublot test values

f. For single sided specification limits (i.e., L only), compute the Lower Quality Index Q_L by use of the following formula:

$$\mathbf{Q_L = (X - L) / S_n}$$

Where: L = specification lower tolerance limit

Estimate the percentage of material within limits (PWL) by entering Table 1 with Q_L, using the column appropriate to the total number (n) of measurements. If the value of Q_L falls between values shown on the table, use the next higher value of PWL.

g. For double-sided specification limits (i.e., L and U), compute the Quality Indexes Q_L and Q_U by use of the following formulas:

$$\mathbf{Q_L = (X - L) / S_n}$$
$$\mathbf{and}$$
$$\mathbf{Q_U = (U - X) / S_n}$$

Where: L and U = specification lower and upper tolerance limits

Estimate the percentage of material between the lower (L) and upper (U) tolerance limits (PWL) by entering Table 1 separately with Q_L and Q_U, using the column appropriate to the total number (n) of measurements, and determining the percent of material above P_L and percent of material below P_U for each tolerance limit. If the values of Q_L fall between values shown on the table, use the next higher value of P_L or P_U. Determine the PWL by use of the following formula:

$$\mathbf{PWL = (P_U + P_L) - 100}$$

Where: P_L = percent within lower specification limit

P_U = percent within upper specification limit

EXAMPLE OF PWL CALCULATION

Project: Example Project

Test Item: Item P-401, Lot A.

A. PWL Determination for Mat Density.

1. Density of four random cores taken from Lot A.

A-1 = 96.60

A-2 = 97.55

A-3 = 99.30

A-4 = 98.35

n = 4

2. Calculate average density for the lot.

$X = (x_1 + x_2 + x_3 + . . . x_n) / n$

$X = (96.60 + 97.55 + 99.30 + 98.35) / 4$

$X = 97.95\%$ density

3. Calculate the standard deviation for the lot.

$S_n = \mathbf{[}((96.60 - 97.95)^2 + (97.55 - 97.95)^2 + (99.30 - 97.95)^2 + (98.35 - 97.95)^2)) / (4 - 1)\mathbf{]}^{1/2}$

$S_n = \mathbf{[}(1.82 + 0.16 + 1.82 + 0.16) / 3\mathbf{]}^{1/2}$

$S_n = 1.15$

4. Calculate the Lower Quality Index Q_L for the lot. (L=96.3)

$Q_L = (X - L) / S_n$

$Q_L = (97.95 - 96.30) / 1.15$

$Q_L = 1.4348$

5. Determine PWL by entering Table 1 with $Q_L = 1.44$ and n= 4.

PWL = 98

B. PWL Determination for Air Voids.

1. Air Voids of four random samples taken from Lot A.

A-1 = 5.00

A-2 = 3.74

A-3 = 2.30

A-4 = 3.25

2. Calculate the average air voids for the lot.

$X = (x_1 + x_2 + x_3 . . . n) / n$

$X = (5.00 + 3.74 + 2.30 + 3.25) / 4$

$X = 3.57\%$

3. Calculate the standard deviation S_n for the lot.

$S_n = \mathbf{[}((3.57 - 5.00)^2 + (3.57 - 3.74)^2 + (3.57 - 2.30)^2 + (3.57 - 3.25)^2) / (4 - 1)\mathbf{]}^{1/2}$

$S_n = \mathbf{[}(2.04 + 0.03 + 1.62 + 0.10) / 3\mathbf{]}^{1/2}$

$S_n = 1.12$

4. Calculate the Lower Quality Index Q_L for the lot. (L= 2.0)

$Q_L = (X - L) / S_n$

$Q_L = (3.57 - 2.00) / 1.12$

$Q_L = 1.3992$

5. Determine P_L by entering Table 1 with $Q_L = 1.41$ and n = 4.

$P_L = 97$

6. Calculate the Upper Quality Index Q_U for the lot. (U= 5.0)

$Q_U = (U - X) / S_n$

$Q_U = (5.00 - 3.57) / 1.12$

$Q_U = 1.2702$

7. Determine P_U by entering Table 1 with $Q_U = 1.29$ and n = 4.

$P_U = 93$

8. Calculate Air Voids PWL

$PWL = (P_L + P_U) - 100$

$PWL = (97 + 93) - 100 = 90$

EXAMPLE OF OUTLIER CALCULATION (REFERENCE ASTM E178)

Project: Example Project

Test Item: Item P-401, Lot A.

A. Outlier Determination for Mat Density.

1. Density of four random cores taken from Lot A arranged in descending order.

A-3 = 99.30

A-4 = 98.35

A-2 = 97.55

A-1 = 96.60

2. From ASTM E178, Table 1, for n=4 an upper 5% significance level, the critical value for test criterion = 1.463.

3. Use average density, standard deviation, and test criterion value to evaluate density measurements.

a. For measurements greater than the average:

If (measurement - average)/(standard deviation) is less than test criterion, then the measurement is not considered an outlier.

For A-3, check if (99.30 - 97.95) / 1.15 is greater than 1.463.

Since 1.174 is less than 1.463, the value is not an outlier.

b. For measurements less than the average:

If (average - measurement)/(standard deviation) is less than test criterion, then the measurement is not considered an outlier.

For A-1, check if (97.95 - 96.60) / 1.15 is greater than 1.463.

Since 1.435 is less than 1.463, the value is not an outlier.

Note: In this example, a measurement would be considered an outlier if the density were:

Greater than (97.95 + 1.463 × 1.15) = 99.63%

OR

less than (97.95 - 1.463 × 1.15) = 96.27%.

Table 1. Table for Estimating Percent of Lot Within Limits (PWL)

Percent Within Limits (P_L and P_U)	Positive Values of Q (Q_L and Q_U)							
	n=3	n=4	n=5	n=6	n=7	n=8	n=9	n=10
99	1.1541	1.4700	1.6714	1.8008	1.8888	1.9520	1.9994	2.0362
98	1.1524	1.4400	1.6016	1.6982	1.7612	1.8053	1.8379	1.8630
97	1.1496	1.4100	1.5427	1.6181	1.6661	1.6993	1.7235	1.7420
96	1.1456	1.3800	1.4897	1.5497	1.5871	1.6127	1.6313	1.6454
95	1.1405	1.3500	1.4407	1.4887	1.5181	1.5381	1.5525	1.5635
94	1.1342	1.3200	1.3946	1.4329	1.4561	1.4717	1.4829	1.4914
93	1.1269	1.2900	1.3508	1.3810	1.3991	1.4112	1.4199	1.4265
92	1.1184	1.2600	1.3088	1.3323	1.3461	1.3554	1.3620	1.3670
91	1.1089	1.2300	1.2683	1.2860	1.2964	1.3032	1.3081	1.3118
90	1.0982	1.2000	1.2290	1.2419	1.2492	1.2541	1.2576	1.2602
89	1.0864	1.1700	1.1909	1.1995	1.2043	1.2075	1.2098	1.2115
88	1.0736	1.1400	1.1537	1.1587	1.1613	1.1630	1.1643	1.1653
87	1.0597	1.1100	1.1173	1.1192	1.1199	1.1204	1.1208	1.1212
86	1.0448	1.0800	1.0817	1.0808	1.0800	1.0794	1.0791	1.0789
85	1.0288	1.0500	1.0467	1.0435	1.0413	1.0399	1.0389	1.0382
84	1.0119	1.0200	1.0124	1.0071	1.0037	1.0015	1.0000	0.9990
83	0.9939	0.9900	0.9785	0.9715	0.9671	0.9643	0.9624	0.9610
82	0.9749	0.9600	0.9452	0.9367	0.9315	0.9281	0.9258	0.9241
81	0.9550	0.9300	0.9123	0.9025	0.8966	0.8928	0.8901	0.8882
80	0.9342	0.9000	0.8799	0.8690	0.8625	0.8583	0.8554	0.8533
79	0.9124	0.8700	0.8478	0.8360	0.8291	0.8245	0.8214	0.8192
78	0.8897	0.8400	0.8160	0.8036	0.7962	0.7915	0.7882	0.7858
77	0.8662	0.8100	0.7846	0.7716	0.7640	0.7590	0.7556	0.7531
76	0.8417	0.7800	0.7535	0.7401	0.7322	0.7271	0.7236	0.7211
75	0.8165	0.7500	0.7226	0.7089	0.7009	0.6958	0.6922	0.6896
74	0.7904	0.7200	0.6921	0.6781	0.6701	0.6649	0.6613	0.6587
73	0.7636	0.6900	0.6617	0.6477	0.6396	0.6344	0.6308	0.6282
72	0.7360	0.6600	0.6316	0.6176	0.6095	0.6044	0.6008	0.5982
71	0.7077	0.6300	0.6016	0.5878	0.5798	0.5747	0.5712	0.5686
70	0.6787	0.6000	0.5719	0.5582	0.5504	0.5454	0.5419	0.5394
69	0.6490	0.5700	0.5423	0.5290	0.5213	0.5164	0.5130	0.5105
68	0.6187	0.5400	0.5129	0.4999	0.4924	0.4877	0.4844	0.4820
67	0.5878	0.5100	0.4836	0.4710	0.4638	0.4592	0.4560	0.4537
66	0.5563	0.4800	0.4545	0.4424	0.4355	0.4310	0.4280	0.4257
65	0.5242	0.4500	0.4255	0.4139	0.4073	0.4030	0.4001	0.3980
64	0.4916	0.4200	0.3967	0.3856	0.3793	0.3753	0.3725	0.3705
63	0.4586	0.3900	0.3679	0.3575	0.3515	0.3477	0.3451	0.3432
62	0.4251	0.3600	0.3392	0.3295	0.3239	0.3203	0.3179	0.3161
61	0.3911	0.3300	0.3107	0.3016	0.2964	0.2931	0.2908	0.2892
60	0.3568	0.3000	0.2822	0.2738	0.2691	0.2660	0.2639	0.2624
59	0.3222	0.2700	0.2537	0.2461	0.2418	0.2391	0.2372	0.2358
58	0.2872	0.2400	0.2254	0.2186	0.2147	0.2122	0.2105	0.2093
57	0.2519	0.2100	0.1971	0.1911	0.1877	0.1855	0.1840	0.1829
56	0.2164	0.1800	0.1688	0.1636	0.1607	0.1588	0.1575	0.1566
55	0.1806	0.1500	0.1406	0.1363	0.1338	0.1322	0.1312	0.1304
54	0.1447	0.1200	0.1125	0.1090	0.1070	0.1057	0.1049	0.1042
53	0.1087	0.0900	0.0843	0.0817	0.0802	0.0793	0.0786	0.0781
52	0.0725	0.0600	0.0562	0.0544	0.0534	0.0528	0.0524	0.0521
51	0.0363	0.0300	0.0281	0.0272	0.0267	0.0264	0.0262	0.0260
50	0.0000	0.0000	0.0000	0.0000	0.0000	0.0000	0.0000	0.0000

Percent Within Limits (P_L and P_U)	Negative Values of Q (Q_L and Q_U)							
	n=3	n=4	n=5	n=6	n=7	n=8	n=9	n=10
49	-0.0363	-0.0300	-0.0281	-0.0272	-0.0267	-0.0264	-0.0262	-0.0260
48	-0.0725	-0.0600	-0.0562	-0.0544	-0.0534	-0.0528	-0.0524	-0.0521
47	-0.1087	-0.0900	-0.0843	-0.0817	-0.0802	-0.0793	-0.0786	-0.0781
46	-0.1447	-0.1200	-0.1125	-0.1090	-0.1070	-0.1057	-0.1049	-0.1042
45	-0.1806	-0.1500	-0.1406	-0.1363	-0.1338	-0.1322	-0.1312	-0.1304
44	-0.2164	-0.1800	-0.1688	-0.1636	-0.1607	-0.1588	-0.1575	-0.1566
43	-0.2519	-0.2100	-0.1971	-0.1911	-0.1877	-0.1855	-0.1840	-0.1829
42	-0.2872	-0.2400	-0.2254	-0.2186	-0.2147	-0.2122	-0.2105	-0.2093
41	-0.3222	-0.2700	-0.2537	-0.2461	-0.2418	-0.2391	-0.2372	-0.2358
40	-0.3568	-0.3000	-0.2822	-0.2738	-0.2691	-0.2660	-0.2639	-0.2624
39	-0.3911	-0.3300	-0.3107	-0.3016	-0.2964	-0.2931	-0.2908	-0.2892
38	-0.4251	-0.3600	-0.3392	-0.3295	-0.3239	-0.3203	-0.3179	-0.3161
37	-0.4586	-0.3900	-0.3679	-0.3575	-0.3515	-0.3477	-0.3451	-0.3432
36	-0.4916	-0.4200	-0.3967	-0.3856	-0.3793	-0.3753	-0.3725	-0.3705
35	-0.5242	-0.4500	-0.4255	-0.4139	-0.4073	-0.4030	-0.4001	-0.3980
34	-0.5563	-0.4800	-0.4545	-0.4424	-0.4355	-0.4310	-0.4280	-0.4257
33	-0.5878	-0.5100	-0.4836	-0.4710	-0.4638	-0.4592	-0.4560	-0.4537
32	-0.6187	-0.5400	-0.5129	-0.4999	-0.4924	-0.4877	-0.4844	-0.4820
31	-0.6490	-0.5700	-0.5423	-0.5290	-0.5213	-0.5164	-0.5130	-0.5105
30	-0.6787	-0.6000	-0.5719	-0.5582	-0.5504	-0.5454	-0.5419	-0.5394
29	-0.7077	-0.6300	-0.6016	-0.5878	-0.5798	-0.5747	-0.5712	-0.5686
28	-0.7360	-0.6600	-0.6316	-0.6176	-0.6095	-0.6044	-0.6008	-0.5982
27	-0.7636	-0.6900	-0.6617	-0.6477	-0.6396	-0.6344	-0.6308	-0.6282
26	-0.7904	-0.7200	-0.6921	-0.6781	-0.6701	-0.6649	-0.6613	-0.6587
25	-0.8165	-0.7500	-0.7226	-0.7089	-0.7009	-0.6958	-0.6922	-0.6896
24	-0.8417	-0.7800	-0.7535	-0.7401	-0.7322	-0.7271	-0.7236	-0.7211
23	-0.8662	-0.8100	-0.7846	-0.7716	-0.7640	-0.7590	-0.7556	-0.7531
22	-0.8897	-0.8400	-0.8160	-0.8036	-0.7962	-0.7915	-0.7882	-0.7858
21	-0.9124	-0.8700	-0.8478	-0.8360	-0.8291	-0.8245	-0.8214	-0.8192
20	-0.9342	-0.9000	-0.8799	-0.8690	-0.8625	-0.8583	-0.8554	-0.8533
19	-0.9550	-0.9300	-0.9123	-0.9025	-0.8966	-0.8928	-0.8901	-0.8882
18	-0.9749	-0.9600	-0.9452	-0.9367	-0.9315	-0.9281	-0.9258	-0.9241
17	-0.9939	-0.9900	-0.9785	-0.9715	-0.9671	-0.9643	-0.9624	-0.9610
16	-1.0119	-1.0200	-1.0124	-1.0071	-1.0037	-1.0015	-1.0000	-0.9990
15	-1.0288	-1.0500	-1.0467	-1.0435	-1.0413	-1.0399	-1.0389	-1.0382
14	-1.0448	-1.0800	-1.0817	-1.0808	-1.0800	-1.0794	-1.0791	-1.0789
13	-1.0597	-1.1100	-1.1173	-1.1192	-1.1199	-1.1204	-1.1208	-1.1212
12	-1.0736	-1.1400	-1.1537	-1.1587	-1.1613	-1.1630	-1.1643	-1.1653
11	-1.0864	-1.1700	-1.1909	-1.1995	-1.2043	-1.2075	-1.2098	-1.2115
10	-1.0982	-1.2000	-1.2290	-1.2419	-1.2492	-1.2541	-1.2576	-1.2602
9	-1.1089	-1.2300	-1.2683	-1.2860	-1.2964	-1.3032	-1.3081	-1.3118
8	-1.1184	-1.2600	-1.3088	-1.3323	-1.3461	-1.3554	-1.3620	-1.3670
7	-1.1269	-1.2900	-1.3508	-1.3810	-1.3991	-1.4112	-1.4199	-1.4265
6	-1.1342	-1.3200	-1.3946	-1.4329	-1.4561	-1.4717	-1.4829	-1.4914
5	-1.1405	-1.3500	-1.4407	-1.4887	-1.5181	-1.5381	-1.5525	-1.5635
4	-1.1456	-1.3800	-1.4897	-1.5497	-1.5871	-1.6127	-1.6313	-1.6454
3	-1.1496	-1.4100	-1.5427	-1.6181	-1.6661	-1.6993	-1.7235	-1.7420
2	-1.1524	-1.4400	-1.6016	-1.6982	-1.7612	-1.8053	-1.8379	-1.8630
1	-1.1541	-1.4700	-1.6714	-1.8008	-1.8888	-1.9520	-1.9994	-2.0362

REFERENCES

The publications listed below form a part of this specification to the extent referenced. The publications are referred to within the text by the basic designation only.

ASTM International (ASTM)

ASTM E178	Standard Practice for Dealing with Outlying Observations

END OF ITEM C-110

SITEWORK SPECIFICATIONS

BID DOCUMENTS

CONSTRUCT WEST APRON EXPANSION
AND INFRASTRUCTURE AT VPS

Item S-100

FDOT Standard Specifications

The construction details which will govern the prosecution of the work as set out in the proposal and/or shown on the plans shall conform in their entirety to Divisions II and III of the Florida Department of Transportation Standard Specification for Road and Bridge Construction, latest edition, including all FDOT Supplements and as modified hereinafter. The construction details contained in the Divisions which are not required to accomplish the work set out in proposal and/or shown on the plans will have no application to these specifications.

In the event of any conflict(s) between the Contract Documents and the FDOT Standard Specifications, the precedence in resolving such conflict(s) shall be as follows:

1. Bidding and Contract requirements, and Technical Specifications for T-Hangar Replacement Project as located in this bid package shall govern over FDOT Bid and Contract Requirements.

2. Greater quantities shall govern over lesser.

3. Higher quality and/or more stringent requirements as adjudged by the Engineer shall govern over lesser.

Where FDOT Specifications refer to the "Engineer", "Engineer of Tests", or "Division of Tests", it shall be understood to mean the Engineer of the Owner as stated in the CONTRACT.

These standard specifications can be obtained from the Florida Department of Transportation at http://www.dot.state.fl.us/programmanagement/specs.shtm or call Area Code (850) 414-4130.

Specifications pertinent to this project from the Standard Specifications for Road and Bridge Construction are as follows:

FDOT Section	**Description**
104	Silt Fence
300	Prime and Tack Coat
330	Hot Bituminous Mixtures – General Construction Requirements
334	Superpave Asphalt Concrete
514	Filter Fabric (Geotextile)
530	Revetment Systems (Rubble Riprap)
520	Concrete Gutter, Curb Elements and Traffic Separator
522	Concrete Sidewalk and Driveways
570	Performance Turf
700	Highway Signing
975	Structural Coating Materials
985	Geosynthetic Materials (for silt fence)

Specification sections not specified above but cross-referenced in the above individual sections are also included herewith and made a part of these Contract Documents.

Method of measurement and basis of payment for material and work performed in conformance with the above specifications shall be as indicated on the BID SCHEDULE. The unit cost bid shall be full compensation for labor, equipment, materials and incidentals necessary to complete the work in conformance with the Plans and Specifications

to the satisfaction of the Owner. Incidentals include, but are not limited to, items which have specific DOT bid item numbers in the referenced specifications but are not included in the Bid Schedule.

Item S-140

Site Demolition

DESCRIPTION

140-1.1 This item consists of demolition work including complete or partial removal of existing construction as indicated on the drawings or as directed by the Engineer. The work includes coordination and scheduling of demolition work by other contractors and utility companies.

Do not begin demolition work until authorized by Owner.

140-1.2 Scope. Types of demolition work may include but are not limited to:

a. Asphaltic concrete pavement: Includes removal of existing base as required, except where indicated as asphalt surface removal. Saw cut to neat, straight, vertical lines at removal limits.
b. Portions of the existing storm drainage and underdrain systems, including various sizes of pipes, structures, mitered end sections, and cleanouts. .
c. Debris and structures buried along proposed excavation, embankment and borrow areas.
f. Chain link fences with barbed wire topping.
d. Steel reinforcement in structures and pavements.
e. Miscellaneous structures encountered during excavation, earthwork, storm drainage, paving, and other operations.

140-1.3 Related Work. Removal work excluded from this section but specified in other sections of specifications:

a. Pavement milling specified in Item S-142.

b. Removal of airfield lighting, miscellaneous electrical items, and related items specified in items for electrical work.

140-1.3 Submittals. Prior to the start of demolition work, submit a demolition plan indicating proposed methods, sequence of operations, and schedule for demolition and removal work to the Engineer for approval. Include coordination for shut-off, capping, and continuation of utility services as required; details for phasing; erosion control; removal methods; disposal of materials; salvage requirements; disconnection schedule of airfield lighting; and coordination of other work in progress.

140-1.4 Job Conditions.

a. Condition of Structures. Owner assumes no responsibility for actual condition of items or structures to be demolished.
b. Demolition and Salvage. Except where materials are designated to be incorporated into new work or retained by Owner, items indicated to be removed but of salvable value to Contractor may be removed as work progresses. Transport such salvaged items from the site as they are removed.
c. Sales. Storage or sale of removed items on site will not be permitted.
d. Protection. Provide temporary barricades and other forms of protection as required to protect workmen and the public from injury due to demolition work, to provide free and safe passage of Owner's personnel and general public to and from occupied portions of site,

and to protect from damage existing work that is to remain in place. Do not overload structural elements or pavements to remain.

e. Damages. Promptly repair damages caused to adjacent or other facilities by demolition work at no cost to Owner. All such repairs must have Engineer's approval.

f. Traffic. Conduct demolition operations and debris removal in a manner to ensure minimum interference with roads, airport employees, general public, and aircraft operation areas.

g. Explosives. Use of explosives will not be permitted.

h. Environmental Controls. Use water sprinkling, temporary enclosures, and other suitable methods to limit dust and dirt rising and scattering in air to lowest practical level. Do not use water if it results in hazardous or objectionable conditions such as ice, flooding, or pollution.

i. Fencing. Except where indicated to be demolished or relocated, existing fencing shall remain in place. However, when existing fencing interferes with the work, the fencing may be temporarily removed to facilitate construction and restored to its original condition upon completion of construction. During the interval of fence removal, security shall be maintained by the Contractor by methods approved by the Engineer. There will be no separate payment for this temporary removal, security, and replacement; this work is incidental to the construction that it interferes with.

140-1.5 Regulatory and Safety Requirements. Comply with all federal, state, and local safety, security, hauling, disposal, and environmental protection regulations.

140-1.6 Foreign Object Damage (FOD). Aircraft and aircraft engines are subject to FOD from debris and waste material lying on airfield pavements. Remove all materials that may appear on or near operational aircraft pavements due to the Contractor's operations. If necessary, the Engineer may require the Contractor to install a temporary barricade at the Contractor's expense to control the spread of FOD potential debris. The barricade shall consist of a fence covered with a fabric designed to stop the spread of debris; anchor the fence and fabric to prevent displacement by winds or jet/prop blasts. Remove barricade when no longer required.

140-1.7 Staging. Certain items cannot be demolished until after work in other phases is complete. Coordinate work with Owner and approved phasing plan.

EXECUTION

140-2.1 Inspection. Prior to commencement of demolition work, inspect areas in which demolition will be performed. Photograph or video tape existing condition of structure surfaces, equipment or surrounding properties which could be misconstrued as damage resulting from demolition work. File photographs or tapes with Engineer prior to starting work.

140-2.2 Preparation. Provide shoring, bracing, or support to prevent movement, settlement, or collapse of structures or elements to be demolished and adjacent facilities to remain. Cease operations and notify the Engineer immediately if safety of structure or surrounding area appears to be endangered. Take precautions to support structure until determination is made for continuing operations.

140-2.3 Demolition.

a. Perform demolition work in a systematic manner. Use such methods as required to complete work indicated on drawings or directed by Engineer in accordance with the

demolition plan and governing regulations.

b. Demolish concrete, excluding pavements, and masonry construction in sections; cut concrete and masonry at junctions with construction to remain using power-driven impact tools, saws, or hand tools as permitted.

c. Completely fill below-grade areas and voids resulting from demolition work. Provide fill consisting of approved soil, gravel or sand, free of trash and debris, stones over 6" diameter, roots or other organic matter. Place fill in accordance with Item P-152.

d. Remove existing utilities and terminate in a manner conforming to the locally recognized code covering the specific utility and approved by the Engineer.

e. Runway Edge Lights. Runway edge light fixtures and isolation transformers to be removed shall be protected and turned over to airport maintenance personnel. Concrete encased base cans, conduits, and cables shall be disposed of off airport property.

140-2.4 Pavement Removal.

a. Saw cut existing pavement full depth (to bottom of base course) along removal limits except as otherwise indicated. Except where milling is indicated, break up and remove pavements full depth or as otherwise indicated.

b. Edges of saw cuts shall be protected and shall be neat and square for matching new pavement to existing pavement.

c. Where no method of removal is specified or shown, Contractor may select and submit a method for Engineer's approval.

d. Pavement demolition shall be performed with minimum disturbance or vibration to adjacent pavements to remain. Any subsidence, weakening, or damage to pavement or pavement edges to remain that are caused by the Contractor's operations shall be repaired as directed by the Owner and Engineer at the sole expense of the Contractor. All repair materials and methods shall be as directed by the Engineer whose decision shall be final.

e. Where asphalt surface course removal is specified, milling in accordance with section S-141 will be an acceptable method of removal, however, payment will still be made at the contract unit price for Item S-140-2 – Asphalt Surface Course Removal.

140-2.5 Compaction of Existing Base and Subgrade. Existing base material indicated to remain shall be compacted to the density specified for new base material. Existing subgrade that is exposed by the demolition work and will not need excavation shall be compacted to the density specified in Item P-152. The cost of compaction work shall be incidental to the item for pavement removal.

140-2.6 Reuse of Materials. Materials and equipment indicated to be reused or relocated shall be removed and stored to prevent damage and re-installed as the work progresses.

140-2.7 Items to be Salvaged. Materials and equipment to be removed that are indicated to remain the property of the Owner shall be removed, protected and delivered to a storage site on airport property as designated by the Engineer.

140-2.8 Dust and Debris Control. Contractor shall prevent the spread of dust and debris on airfield pavements and elsewhere and shall avoid creation of a nuisance or hazard in the surrounding area. Vacuum and sweep pavements as often as necessary to control the spread of debris that may result in FOD potential to aircraft.

140-2.9 Disposal of Demolished Materials.

a. Transport and legally dispose of all debris, rubbish and other demolished materials, daily,

off airport property. Do not allow accumulations on airfield pavements or elsewhere on site. Store materials that cannot be removed daily in areas designated by the Engineer.

b. If hazardous materials are encountered during demolition operations, comply with applicable regulations, laws, and ordinances concerning removal, handling and protection against exposure or environmental pollution.

c. Burning will not be permitted on airport property.

140-2.10 Clean-Up. Upon completion of demolition work, remove tools, equipment and demolished materials from site. Remove protections and leave areas clean and free of dust and debris.

MEASUREMENT AND PAYMENT

140-3.1 General. The contract unit prices shall include the cost of removing the items, labor, tools, equipment, handling, hauling, stockpiling, disposal, re-installation, clean-up, and all incidental work required to complete the item.

a. Asphalt surface course and full depth asphalt pavement removal (including base course) will be measured and paid on a square yard basis which also will cover the cost of saw cutting and compaction of base course and subgrade compaction as required.

b. Removal of drainage structures, headwalls, and runway edge lights will be measured and paid per each, and includes excavation and backfilling. Light fixtures are to be turned over to the Owner.

c. Removal of storm drainage pipes, electrical and fiber optic conduits will be measured and paid per linear foot for the various sizes and includes excavation, backfilling. Removal of existing cables where required is incidental to cost of removal of conduit pipe.

d. Miscellaneous demolition shall include the demolition and removal of existing miscellaneous items not specifically identified herein which are called out on the plans for removal. No direct measurement will be made for miscellaneous demolition.

Payment will be made under:

S-140-1	Full Depth Asphalt Pavement Removal - per square yard
S-140-2	Asphalt Surface Course Removal – per square yard
S-140-3	Concrete Pavement Removal - per square yard
S-140-4	Remove 36” CMP Culvert - per each
S-140-5	Remove Water Line Flush Facility, including 20” DIP Water Pipe with Stand Pipe, Concrete Box and Pad and Riprap Apron - per lump sum
S-140-6	Remove Chain Link Fence - per linear foot
S-140-7	Remove Chain Link Fence Slide Gate and operator - per each
S-140-8	Remove Sanitary Sewer Lift Station, including Valve Box and Control Panel – per lump sum

S-140-9	Remove Lav Cart Dump Facility, including Grinder Pump Station, Control Panel, Effluent Inlet Drain and Piping, and 2" Force main – per lump sum
S-140-10	Remove Sanitary Sewer Manhole – per each
S-140-11	Remove 2" PE Sanitary Sewer Force Main – per linear foot
S-140-12	Remove 6" PVC Sanitary Sewer Force Main – per linear foot
S-140-13	Remove 6" and 12" DIP Water Main – per linear foot
S-140-14	Remove Existing Riprap – per lump sum
S-140-15	Remove Existing Aluminum Shed – per lump sum
S-140-16	Remove Existing Masonry Building with Canopy – per lump sum

END OF ITEM S-140

Item S-141

Pavement Milling

DESCRIPTION

141-1.1 The work shall consist of milling asphalt pavements in accordance with these specifications and at locations and typical sections indicated on the drawings, or as directed by the Engineer.

EQUIPMENT

141-2.1 Cold Milling Machine. Shall be a self-propelled pavement profiler with sufficient power, traction, and stability to cold mill asphalt pavements. The milling machine shall be equipped with grade and slope control systems which will automatically control the longitudinal profile and cross slope of the milled surface to an accuracy of + 1/8-inch by the use of one or more sensors. The machine shall be capable of leaving a uniform surface without damage to the underlying pavement structure. The gross weight of the machine shall be sized and distributed to avoid overstressing or damaging the existing pavement structure or subgrade to remain. Conveyors shall be provided to transfer the milled material from the pavement to a truck.

141-2.2 Dust Control. The milling equipment shall be provided with dust control devices as needed to meet local, State, and Federal pollution control regulations.

141-2.3 Miscellaneous. Provide power brooms, hand brooms, shovels, vacuums, and other equipment as needed for final cleaning of milled surface and disposal of debris.

CONSTRUCTION REQUIREMENTS

141-3.1 Milling Operation. The existing pavement shall be milled to the indicated profile and cross section at the locations shown on the drawings. The Contractor may elect to make multiple cuts to achieve the depth of cut or cross slope required by the drawings.

141-3.2 Grade Control. The profile and cross slope of the milled surface shall be established by string lines and an automatic cross slope control mechanism. The milled pavement surface will be subject to visual and straightedge inspection. A 10-foot straightedge shall be maintained in the vicinity of the milling operation at all times for the purpose of measuring surface irregularities of the milled pavement surface. The straightedge and labor for its use shall be provided by the Contractor. All longitudinal irregularities in excess of 1/8-inch in 10 feet shall be remilled at no additional cost to the Owner, including the cost of any leveling material that may be needed.

The cross slope shall be uniform to a degree that no depressions or misalignment of slope greater than 1/4-inch in 10 feet are present when tested with a straightedge placed perpendicular to the centerline.

141-3.3 Protection. The milling operation shall proceed in such a manner as to prevent damage to the underlying pavement structure, utilities, drainage structures, light fixtures, paved surfaces outside the milled area, and any other appurtenances. The milled pavement surface shall be reasonably free of excessive scarification marks or other damage as determined by the Engineer. Any leveling or patching required as a result of negligence by the Contractor shall be repaired with hot asphalt plant mix at no cost to the Owner and in a manner acceptable to the Engineer. Manholes, inlets, light fixtures, utility lines, and other existing

features damaged by the Contractor's operations shall be repaired or replaced at the expense of the Contractor. The Engineer may require re-milling any area where surface laminations or defects resulting from the Contractor's operations cause a non-uniform surface.

141-3.4 Clean-up. The milled pavement surface shall be thoroughly cleaned of all loose aggregate particles, dust, mill cuttings, and other objectionable material. Cuttings not immediately picked up during milling and removal operations shall be promptly removed by power brooming, vacuuming, blowing, or other means as necessary; this clean-up shall be done before traffic or construction equipment is allowed to recompact and rebond loose milling residue to the milled surface.

141-3.5 Dust and Hazard Control. The pavement removal operations shall be conducted to effectively control within regulations the amount of dust being emitted. The operation shall be planned and conducted so that it is safe for persons and property adjacent to the work including the traveling public.

141-3.6 Disposal. The material removed by means of milling shall become the property of the Contractor and shall be disposed of off airport property in an approved location.

METHOD OF MEASUREMENT

141-4.1 The quantity of milled asphalt pavements to be paid for will be the actual number of square yards of milled pavement surface approved, completed, and accepted. Milling in multiple cuts will be counted as one surface, not multiple surfaces.

BASIS OF PAYMENT

141-5.1 Milled pavement, measured as defined above, will be paid for at the contract unit price bid per square yard. Such payment shall be full compensation for all work covered by this section, including but not limited to milling the pavement, cleaning the milled surface, loading, hauling, and disposal of all milled material and for all materials, labor, equipment, tools, and incidentals necessary for satisfactory performance of the work.

Payment will be made under:

Item S-141	Asphalt Pavement Milling - per Square Yard

END OF ITEM S-141

Item S-142

Pavement Marking Removal

DESCRIPTION

142-1.1 This item shall consist of removing existing and temporary pavement markings from paved areas designated on the drawings or required by the Engineer. The Contractor shall schedule and coordinate the removal operations with the Engineer prior to the start of any work. The limits of pavement marking removal will be determined by the Engineer.

MATERIALS

142-2.1 WATER. Water to be used by high-pressure water equipment or for other purposes shall be obtained by the Contractor.

142-2.2 CHEMICALS. The use of chemicals for removing pavement markings will not be permitted.

EQUIPMENT

142-3.1 EQUIPMENT. Equipment, tools, and machinery to be used in the work shall be in safe and satisfactory operational condition at all times.

CONSTRUCTION

142-4.1 ENVIRONMENTAL CONDITIONS. Except as approved by the Engineer, do not perform work when the atmospheric temperature is below 40 degrees F or when the pavement is covered with snow or ice.

142-4.2 DEGREE OF REMOVAL. Remove all loose, flaking paint from existing painted areas that are to be restriped with compatible materials, and from paved areas to be overlaid with new asphalt pavement; hard, firm paint that has the surface chalk removed may remain in such areas. Remove 100%, or as approved by the Engineer, of all existing and temporary markings that do not comply with the new striping layout. Remove 100%, or as approved by the Engineer, of all existing marking materials that are not compatible with new marking materials to be placed thereon; compatibility of the marking materials shall be certified in writing by the manufacturer of the new marking material.

142-4.3 REMOVAL METHODS. Pavement markings shall be removed from indicated areas by methods acceptable to the Engineer that cause negligible damage to existing pavements, surface texture, joint sealants, or other airfield appurtenances as determined by the Engineer. The Contractor shall repair at his expense any damage to the pavement, surface texture, sealant, or appurtenances caused by the removal work by methods acceptable to the Engineer.

Obliterating pavement markings by masking with paint, bituminous material, surface treatments or other cover material will not be an acceptable removal method.

Any removal method that causes objectionable dust, contaminated water runoff, or other such hazard or nuisance shall be controlled by means approved by the Engineer that eliminate such causes of objection or its use will not be allowed.

142-4.4 REMOVAL OF DEPOSITS. Sand, water, residue, and other waste material that may be deposited on the pavement as a result of removal operations shall be removed as the work progresses. Obtain the approval of residue removal and disposal method from the Engineer prior to beginning work. Accumulations of residue or other waste materials which might interfere with drainage or might constitute a hazard to aircraft or aircraft operations will not be permitted.

142-4.5 TEST SECTION. Prior to the start of work, remove pavement markings on designated test areas not less than 50 square yards in size. Use approved procedures and equipment needed to achieve the required degree of marking removal. The test section will be inspected and approved by the Engineer before any further removal work will be allowed.

METHOD OF MEASUREMENT

142-5.1 The quantity of pavement marking removal to be paid for shall be the number of square feet of designated pavement markings removed in accordance with the specifications, complete, and accepted by Engineer.

142-5.2 There shall be no separate measurement or payment for removing loose and flaking paint, and paint chalkings, from existing markings to be overlaid or restriped. All costs for this work shall be considered incidental and shall be included in contract unit prices for other payment items.

BASIS OF PAYMENT

142-6.1 For removal of existing non-conforming, non-compatible, or temporary pavement markings, payment shall be made at the contract unit price per square foot. This contract price shall be full compensation for all disposal work and for furnishing all material, labor, equipment, tools, and incidentals necessary to complete the item.

Payment will be made under:

Item S-142 Pavement Markings Removal -- per square foot

END OF ITEM S-142

Item P-151

Clearing and Grubbing

DESCRIPTION

151-1.1 This item shall consist of clearing or clearing and grubbing, including the disposal of materials, for all areas within the limits designated on the plans or as required by the Resident Project Representative (RPR).

a. Clearing shall consist of the cutting and removal of all trees, stumps, brush, logs, hedges, the removal of fences and other loose or projecting material from the designated areas. The grubbing of stumps and roots will not be required.

b. Clearing and grubbing shall consist of clearing the surface of the ground of the designated areas of all trees, stumps, down timber, logs, snags, brush, undergrowth, hedges, heavy growth of grass or weeds, fences, structures, debris, and rubbish of any nature, natural obstructions or such material which in the opinion of the RPR is unsuitable for the foundation of strips, pavements, or other required structures, including the grubbing of stumps, roots, matted roots, foundations, and the disposal from the project of all spoil materials resulting from clearing and grubbing.

c. Tree Removal. Tree Removal shall consist of the cutting and removal of isolated single trees or isolated groups of trees, and the grubbing of stumps and roots. The removal of all the trees of this classification shall be in accordance with the requirements for the particular area being cleared.

CONSTRUCTION METHODS

151-2.1 General. The areas denoted on the plans to be `cleared and grubbed` shall be staked on the ground by the `Contractor as indicated on the plans .`

The removal of existing structures and utilities required to permit orderly progress of work shall be accomplished by local agencies, unless otherwise shown on the plans. Whenever a telephone pole, pipeline, conduit, sewer, roadway, or other utility is encountered and must be removed or relocated, the Contractor shall advise the RPR who will notify the proper local authority or owner to secure prompt action.

151-2.1.1 Disposal. All materials removed by clearing or by clearing and grubbing shall be disposed of `outside the Airport's limits at the Contractor's responsibility` , except when otherwise directed by the RPR. Burning will not be permitted. As far as practicable, waste concrete and masonry shall be placed on slopes of embankments or channels. When embankments are constructed of such material, this material shall be placed in accordance with requirements for formation of embankments. Any broken concrete or masonry that cannot be used in construction and all other materials not considered suitable for use elsewhere, shall be disposed of by the Contractor. In no case, shall any discarded materials be left in windrows or piles adjacent to or within the airport limits. The manner and location of disposal of materials shall be subject to the approval of the RPR and shall not create an unsightly or objectionable view. When the Contractor is required to locate a disposal area outside the airport property limits, the Contractor shall obtain and file with the RPR permission in writing from the property owner for the use of private property for this purpose.

151-2.1.2 Blasting. `Blasting shall not be allowed.`

151-2.2 Clearing. The Contractor shall clear the staked or indicated area of all materials as indicated on the plans. Trees unavoidably falling outside the specified clearing limits must be cut up, removed, and disposed of in a satisfactory manner. To minimize damage to trees that are to be left standing, trees shall be felled toward the center of the area being cleared. The Contractor shall preserve and protect from injury all trees not to be removed. The trees, stumps, and brush shall be cut flush with the original ground surface. The grubbing of stumps and roots will not be required.

Fences shall be removed and disposed of as directed by the RPR. Fence wire shall be neatly rolled and the wire and posts stored on the airport if they are to be used again, or stored at a location designated by the RPR if the fence is to remain the property of a local owner or authority.

151-2.3 Clearing and grubbing. In areas designated to be cleared and grubbed, all stumps, roots, buried logs, brush, grass, and other unsatisfactory materials as indicated on the plans, shall be removed. Tap roots and other projections over 1-1/2 inches in diameter shall be grubbed out to a depth of at least 18 inches below the existing ground surface.

Any buildings and miscellaneous structures that are shown on the plans to be removed shall be demolished or removed, and all materials shall be disposed of by removal from the site. The cost of removal covered under item S-140. The remaining or existing foundations, wells, cesspools, and like structures shall be destroyed by breaking down the materials of which the foundations, wells, cesspools, etc., are built to a depth at least 2 feet below the existing surrounding ground. Any broken concrete, blocks, or other objectionable material that cannot be used in backfill shall be removed and disposed of at the Contractor's expense. The holes or openings shall be backfilled with acceptable material and properly compacted.

All holes in embankment areas remaining after the grubbing operation shall have the sides of the holes flattened to facilitate filling with acceptable material and compacting as required in Item P-152. The same procedure shall be applied to all holes remaining after grubbing in areas where the depth of holes exceeds the depth of the proposed excavation.

METHOD OF MEASUREMENT

151-3.1 The quantities of clearing and grubbing as shown by the limits on the plans shall be `the number of acres or fractions thereof` of land specifically cleared and grubbed.

BASIS OF PAYMENT

151-4.2 Payment shall be made at the contract unit price `per acre` for clearing and grubbing. This price shall be full compensation for furnishing all materials and for all labor, equipment, tools, and incidentals necessary to complete the item.

151-4.3 Payment shall be made at the contract unit price `per number of individual trees` for tree removal. This price shall be full compensation for furnishing all materials and for all labor, equipment, tools, and incidentals necessary to complete the item.

Payment will be made under:

Item P-151-1	Clearing and grubbing - `per acre or fractions thereof`
Item P-152-2	Tree Removal – `per number of individual trees`

END OF ITEM P-151

Item P-152

Excavation, Subgrade, and Embankment

DESCRIPTION

152-1.1 This item covers excavation, disposal, placement, and compaction of all materials within the limits of the work required to construct safety areas, runways, taxiways, aprons, and intermediate areas as well as other areas for drainage, building construction, parking, or other purposes in accordance with these specifications and in conformity to the dimensions and typical sections shown on the plans.

152-1.2 Classification. All material excavated shall be classified as defined below:

a. Unclassified excavation. Unclassified excavation shall consist of the excavation and disposal of all material, regardless of its nature which is not otherwise classified and paid for under one of the following items .

152-1.3 Unsuitable excavation. Unsuitable material shall be disposed in designated waste areas as shown on the plans. Materials containing vegetable or organic matter, such as muck, peat, organic silt, or sod shall be considered unsuitable for use in embankment construction. Material suitable for topsoil may be used on the embankment slope when approved by the RPR.

CONSTRUCTION METHODS

152-2.1 General. Before beginning excavation, grading, and embankment operations in any area, the area shall be cleared or cleared and grubbed in accordance with Item P-151. All areas within the limits of grading and clearing & grubbing shall be stripped of the top 4 inches or to depths directed by the engineer of material which is to be stockpiled in onsite locations designated on the drawings or as directed by the engineer for use as topsoil, or placed directly as topsoil. Excess topsoil shall be disposed of off airport property. **Upon completion stripping topsoil from any area, the area will be surveyed by the contractor for the purpose of determining the volume stripped. This survey will be considered incidental to Item T-904 – Topsoiling. A pre-construction survey will be performed of the entire Phase 1 (Credit Card Lot expansion area prior to beginning stripping operations. This survey will be paid for under Item P-152-2 – Preconstruction Survey of Phase 1 Limits of Grading. Survey shots are to be on a 25 foot grid and at all grade breaks and are to include edge of pavement shots where new pavement ties to existing. Surveys will be performed by a professional surveyor licensed in the State of Florida**

The suitability of material to be placed in embankments shall be subject to approval by the RPR. Unsuitable material approved by the Engineer for use as topsoil shall be stockpiled in onsite locations designated on the drawings or where directed by the Engineer, or shall be placed directly in its final position as topsoil. All unsuitable material excavated from the site and not approved for use as topsoil shall be disposed of off airport property and shall be paid for under item P-152-1 “Unclassified Excavation”

Topsoil stockpiles shall be kept separate from other stockpiles. All stockpile areas shall be graded to allow positive drainage of the area and of adjacent areas. Stockpiles shall not be placed within 65.5 feet of the centerline of any taxiway or within 250 feet of the centerline of any runway 5-23. Silt fence, in accordance with the plans, shall be constructed at the perimeter of all stockpile areas where directed by the Engineer. At the conclusion of excavation and embankment operations, all material remaining in stockpile areas shall be disposed of off Airport property at no additional cost to the Owner.

When the Contractor’s excavating operations encounter artifacts of historical or archaeological significance, the operations shall be temporarily discontinued and the RPR notified per Section 70, paragraph 70-20. At the direction of the RPR, the Contractor shall excavate the site in such a manner as to

preserve the artifacts encountered and allow for their removal. Such excavation will be paid for as extra work.

Areas outside the limits of the pavement areas where the top layer of soil has become compacted by hauling or other Contractor activities shall be scarified and disked to a depth of 4 inches, to loosen and pulverize the soil. Stones or rock fragments larger than 4 inches in their greatest dimension will not be permitted in the top 6 inches of the subgrade.

If it is necessary to interrupt existing surface drainage, sewers or under-drainage, conduits, utilities, or similar underground structures, the Contractor shall be responsible for and shall take all necessary precautions to preserve them or provide temporary services. When such facilities are encountered, the Contractor shall notify the RPR, who shall arrange for their removal if necessary. The Contractor, at their own expense, shall satisfactorily repair or pay the cost of all damage to such facilities or structures that may result from any of the Contractor's operations during the period of the contract.

a. Blasting. Blasting shall not be allowed.

152-2.2 Excavation. No excavation shall be started until the work has been staked out by the Contractor and the RPR has obtained from the Contractor, the survey notes of the elevations and measurements of the ground surface. The Contractor and RPR shall agree that the original ground lines shown on the original topographic mapping are accurate, or agree to any adjustments made to the original ground lines.

Digital terrain model (DTM) files of the existing surfaces, finished surfaces and other various surfaces were used to develop the design plans.

Volumetric quantities were calculated by comparing DTM files of the applicable design surfaces and generating Triangle Volume Reports. Electronic copies of DTM files and a paper copy of the original topographic map will be issued to the successful bidder.

Existing grades on the design cross sections or DTM's, where they do not match the locations of actual spot elevations shown on the topographic map, were developed by computer interpolation from those spot elevations. Prior to disturbing original grade, Contractor shall verify the accuracy of the existing ground surface by verifying spot elevations at the same locations where original field survey data was obtained as indicated on the topographic map. Contractor shall recognize that, due to the interpolation process, the actual ground surface at any particular location may differ somewhat from the interpolated surface shown on the design cross sections or obtained from the DTM's. Contractor's verification of original ground surface, however, shall be limited to verification of spot elevations as indicated herein, and no adjustments will be made to the original ground surface unless the Contractor demonstrates that spot elevations shown are incorrect. For this purpose, spot elevations which are within 0.1 foot of the stated elevations for ground surfaces, or within 0.04 foot for hard surfaces (pavements, buildings, foundations, structures, etc.) shall be considered "no change". Only deviations in excess of these will be considered for adjustment of the original ground surface. If Contractor's verification identifies discrepancies in the topographic map, Contractor shall notify the RPR in writing at least two weeks before disturbance of existing grade to allow sufficient time to verify the submitted information and make adjustments to the design cross sections or DTM's. Disturbance of existing grade in any area shall constitute acceptance by the Contractor of the accuracy of the original elevations shown on the topographic map for that area.

All areas to be excavated shall be stripped of vegetation and topsoil. Topsoil shall be stockpiled for future use in areas designated on the plans or by the RPR. All suitable excavated material shall be used in the formation of embankment, subgrade, or other purposes **as** shown on the plans. All unsuitable material shall be disposed of as specified in subsection 152-2.1 .

The grade shall be maintained so that the surface is well drained at all times.

When the volume of the excavation exceeds that required to construct the embankments to the grades as indicated on the plans, the excess shall be used to grade the areas of ultimate development or disposed of off airport property . When the volume of excavation is not sufficient for constructing the embankments to the grades indicated, the deficiency shall be obtained from borrow areas.

a. Selective grading. When selective grading is indicated on the plans, the more suitable material designated by the RPR shall be used in constructing the embankment or in capping the pavement subgrade. If, at the time of excavation, it is not possible to place this material in its final location, it shall be stockpiled in approved areas until it can be placed. The more suitable material shall then be placed and compacted as specified. Selective grading shall be considered incidental to the work involved. The cost of stockpiling and placing the material shall be included in the various pay items of work involved.

b. Undercutting. Rock, shale, hardpan, loose rock, boulders, or other material unsatisfactory for safety areas, subgrades, roads, shoulders, or any areas intended for turf shall be excavated to a minimum depth of 12 inches below the subgrade or to the depth specified by the RPR. Muck, peat, matted roots, or other yielding material, unsatisfactory for subgrade foundation, shall be removed to the depth specified. Unsuitable materials shall be **disposed of off airport property. The cost is incidental to this item .** This excavated material shall be paid for at the contract unit price per cubic yard for item P-152-1 "Unclassified Excavation". The excavated area shall be backfilled with suitable material obtained from the grading operations or borrow areas and compacted to specified densities. The necessary backfill will constitute a part of the embankment. Where rock cuts are made, backfill with select material. Any pockets created in the rock surface shall be drained in accordance with the details shown on the plans. Undercutting will be paid as **unclassified excavation** .

c. Over-break. Over-break, including slides, is that portion of any material displaced or loosened beyond the finished work as planned or authorized by the RPR. All over-break shall be graded or removed by the Contractor and disposed of as directed by the RPR. The RPR shall determine if the displacement of such material was unavoidable and their own decision shall be final. Payment will not be made for the removal and disposal of over-break that the RPR determines as avoidable. Unavoidable over-break will be classified as "Unclassified Excavation."

d. Removal of utilities. The removal of existing structures and utilities required to permit the orderly progress of work will be accomplished by the Contractor as indicated on the plans. All existing foundations shall be excavated at least 2 feet below the top of subgrade or as indicated on the plans, and the material disposed of as directed by the RPR. All foundations thus excavated shall be backfilled with suitable material and compacted as specified for embankment or as shown on the plans.

152-2.3 Borrow excavation. Borrow areas are not required.

152-2.4 Drainage excavation. Drainage excavation shall consist of excavating drainage ditches including intercepting, inlet, or outlet ditches; or other types as shown on the plans. The work shall be performed in sequence with the other construction. Ditches shall be constructed prior to starting adjacent excavation operations. All satisfactory material shall be placed in embankment fills; unsuitable material shall be placed in designated waste areas or as directed by the RPR. All necessary work shall be performed true to final line, elevation, and cross-section. The Contractor shall maintain ditches constructed on the project to the required cross-section and shall keep them free of debris or obstructions until the project is accepted.

152-2.5 Preparation of cut areas or areas where existing pavement has been removed.

a. Asphalt GSE Apron and Parking Lot Pavement: In those areas on which a subbase or base course is to be placed, the top `12 inches` of subgrade shall be compacted to not less than `100 %` of maximum density for non-cohesive soils, and `95%` of maximum density for cohesive soils as determined by ASTM **D698**.

b. Full Strength Asphalt Aircraft Apron: In those areas on which a subbase or base course is to be placed, the subgrade shall be compacted to not less than the follow depths and percentages of the maximum dry density as determined by ASTM D1557:

% Max Dry Density	Depth of Compaction from Top of Subgrade (in)	
	Non-Cohesive Soils	Cohesive Soils
100	0-18	-
95	18-51	0-15

c. PCC Aircraft Hardstands: In those areas on which a subbase or base course is to be placed, the subgrade shall be compacted to not less than the follow depths and percentages of the maximum dry density as determined by ASTM D1557:

% Max Dry Density	**Depth of Compaction from Top of Subgrade (in)**	
	Non-Cohesive Soils	Cohesive Soils
90	0-35	0-12

The subgrade in cut areas should have natural densities shown or should (a) be compacted from the surface to achieve the required densities, (b) be removed and replaced at the densities shown, or (c) when economics and grades permit, be covered with sufficient select or subbase material so that the uncompacted subgrade is at a depth where the in-place densities are satisfactory.

As used in this specification, "non-cohesive" shall mean those soils having a plasticity index (PI) of less than 3 as determined by ASTM D4318.

152-2.6 Preparation of embankment area. All sod and vegetative matter shall be removed from the surface upon which the embankment is to be placed as specified in 152-2.1. The cleared surface shall be broken up by plowing or scarifying to a minimum depth of 6 inches and shall then be compacted per paragraph 152-2.10.

Sloped surfaces steeper than one (1) vertical to four (4) horizontal shall be plowed, stepped, benched, or broken up so that the fill material will bond with the existing material. When the subgrade is part fill and part excavation or natural ground, the excavated or natural ground portion shall be scarified to a depth of 12 inches and compacted as specified for the adjacent fill.

No direct payment shall be made for the work performed under this section. The necessary clearing and grubbing and the quantity of excavation removed will be paid for under the respective items of work.

152-2.7 Control Strip. The first half-day of construction of subgrade and/or embankment shall be considered as a control strip for the Contractor to demonstrate, in the presence of the RPR, that the materials, equipment, and construction processes meet the requirements of this specification. The sequence and manner of rolling necessary to obtain specified density requirements shall be determined. The maximum compacted thickness may be increased to a maximum of 12 inches upon the Contractor's demonstration that approved equipment and operations will uniformly compact the lift to the specified density. The RPR must witness this demonstration and approve the lift thickness prior to full production.

Control strips that do not meet specification requirements shall be reworked, re-compacted, or removed and replaced at the Contractor's expense. Full operations shall not begin until the control strip has been accepted by the RPR. The Contractor shall use the same equipment, materials, and construction methods for the remainder of construction, unless adjustments made by the Contractor are approved in advance by the RPR.

152-2.8 Formation of embankments. The material shall be constructed in lifts as established in the control strip, but not less than 6 inches nor more than 12 inches of compacted thickness.

When more than one lift is required to establish the layer thickness shown on the plans, the construction procedure described here shall apply to each lift. No lift shall be covered by subsequent lifts until tests verify that compaction requirements have been met. The Contractor shall rework, re-compact and retest any material placed which does not meet the specifications.

The lifts shall be placed, to produce a soil structure as shown on the typical cross-section or as directed by the RPR. Materials such as brush, hedge, roots, stumps, grass and other organic matter, shall not be incorporated or buried in the embankment.

Earthwork operations shall be suspended at any time when satisfactory results cannot be obtained due to rain, freezing, or other unsatisfactory weather conditions in the field. Frozen material shall not be placed in the embankment nor shall embankment be placed upon frozen material. Material shall not be placed on surfaces that are muddy, frozen, or contain frost. The Contractor shall drag, blade, or slope the embankment to provide surface drainage at all times.

The material in each lift shall be within ±2% of optimum moisture content before rolling to obtain the prescribed compaction. The material shall be moistened or aerated as necessary to achieve a uniform moisture content throughout the lift. Natural drying may be accelerated by blending in dry material or manipulation alone to increase the rate of evaporation.

The Contractor shall make the necessary corrections and adjustments in methods, materials or moisture content to achieve the specified embankment density.

The **contractor** will take samples of excavated materials which will be used in embankment for testing and develop a Moisture-Density Relations of Soils Report (Proctor) in accordance with ASTM D698 for all work in phase 1 (credit card parking lot) and ASTM D 1557 in all other areas. A new Proctor shall be developed for each soil type based on visual classification.

Density tests will be taken by the **contractor** for every **[1,000]** square yards of compacted embankment for each lift which is required to be compacted, or other appropriate frequencies as determined by the RPR.

If the material has greater than 30% retained on the 3/4-inch sieve, follow AASHTO T-180 Annex Correction of maximum dry density and optimum moisture for oversized particles.

Rolling operations shall be continued until the embankment is compacted to not less than 100% of maximum density for non-cohesive soils, and 95% of maximum density for cohesive soils as determined by ASTM D698 . Under all areas to be paved , the embankments shall be compacted to a depth and density as specified in paragraph 152-2.5 As used in this specification, "non-cohesive" shall mean those soils having a plasticity index (PI) of less than 3 as determined by ASTM D4318 .

On all areas outside of the pavement areas, no compaction will be required on the top 4 inches which shall be prepared for a seedbed in accordance with the applicable turfing specifications.

The in-place field density shall be determined in accordance with ASTM D1556 or ASTM 6938 using Procedure A, the direct transmission method, and ASTM D6938 shall be used to determine the moisture content of the material. The machine shall be calibrated in accordance with ASTM D6938.]. The Contractor's laboratory shall perform all density tests in the RPR's presence and provide the test results upon completion to the RPR for acceptance . The Owner may retain the services of an independent quality assurance (QA) testing firm to perform additional QA testing for acceptance determination. If the specified density is not attained, the area represented by the test or as designated by the RPR shall be reworked and/or re-compacted and additional random tests made. This procedure shall be followed until the specified density is reached.

Compaction areas shall be kept separate, and no lift shall be covered by another lift until the proper density is obtained.

During construction of the embankment, the Contractor shall route all construction equipment evenly over the entire width of the embankment as each lift is placed. Lift placement shall begin in the deepest portion of the embankment fill. As placement progresses, the lifts shall be constructed approximately parallel to the finished pavement grade line.

When rock, concrete pavement, asphalt pavement, and other embankment material are excavated at approximately the same time as the subgrade, the material shall be incorporated into the outer portion of the embankment and the subgrade material shall be incorporated under the future paved areas. Stones, fragmentary rock, and recycled pavement larger than 4 inches in their greatest dimensions will not be allowed in the top 12 inches of the subgrade. Rockfill shall be brought up in lifts as specified or as directed by the RPR and the finer material shall be used to fill the voids forming a dense, compact mass. Rock, cement concrete pavement, asphalt pavement, and other embankment material shall not be disposed of except at places and in the manner designated on the plans or by the RPR.

When the excavated material consists predominantly of rock fragments of such size that the material cannot be placed in lifts of the prescribed thickness without crushing, pulverizing or further breaking down the pieces, such material may be placed in the embankment as directed in lifts not exceeding 2 feet in thickness. Each lift shall be leveled and smoothed with suitable equipment by distribution of spalls and finer fragments of rock. The lift shall not be constructed above an elevation 4 feet below the finished subgrade.

There will be no separate measurement of payment for compacted embankment. All costs incidental to placing in lifts, compacting, discing, watering, mixing, sloping, and other operations necessary for construction of embankments will be included in the contract price for excavation, borrow, or other items. Onsite excavation material may be used in embankments.

152-2.9 Proof rolling. The purpose of proof rolling the subgrade is to identify any weak areas in the subgrade and not for compaction of the subgrade. Before start of embankment, and After compaction is completed, the subgrade area shall be proof rolled with a **[** 50 ton Proof Roller with tires spaced not more than 32 inches on-center with tires inflated to 150 psi **]** in the presence of the RPR. Apply a minimum of **4** coverages, or as specified by the RPR, under pavement areas. A coverage is defined as the application of one tire print over the designated area. Soft areas of subgrade that deflect more than 1 inch or show permanent deformation greater than 1 inch shall be removed and replaced with suitable material or reworked to conform to the moisture content and compaction requirements in accordance with these specifications. Removal and replacement of soft areas is incidental to this item.

152-2.10 Compaction requirements. The subgrade under areas to be paved shall be compacted to a depth and density as specified in paragraph 152-2.5. The subgrade in areas outside the limits of the pavement areas shall be compacted to a depth of 12 inches and to a density of not less than 95 percent of the maximum density as determined by ASTM D698.

The material to be compacted shall be within ±2% of optimum moisture content before being rolled to obtain the prescribed compaction (except for expansive soils). When the material has greater than 30 percent retained on the ¾ inch sieve, follow the **methods in ASTM D698 or ASTM D1557 or procedures in AASHTO T180 Annex for correction of maximum dry density and optimum moisture for oversized particles.** Tests for moisture content and compaction will be taken at a minimum of **1000** S.Y. of subgrade. All quality control testing shall be done by the Contractor's laboratory in the presence of the RPR, and density test results shall be furnished upon completion to the RPR for acceptance determination.

The Owner may retain the services of an independent quality assurance (QA) testing firm to perform additional QA testing for acceptance determination.

The in-place field density shall be determined in accordance with ASTM D1556 **or** ASTM D6938 using Procedure A, the direct transmission method, and ASTM D6938 shall be used to determine the moisture content of the material. The machine shall be calibrated in accordance with ASTM D6938 within 12 months prior to its use on this contract. The gage shall be field standardized daily.

Maximum density refers to maximum dry density at optimum moisture content unless otherwise specified.

If the specified density is not attained, the entire lot shall be reworked and/or re-compacted and additional random tests made. This procedure shall be followed until the specified density is reached.

All cut-and-fill slopes shall be uniformly dressed to the slope, cross-section, and alignment shown on the plans or as directed by the RPR and the finished subgrade shall be maintained.

152-2.11 Finishing and protection of subgrade. Finishing and protection of the subgrade is incidental to this item. Grading and compacting of the subgrade shall be performed so that it will drain readily. All low areas, holes or depressions in the subgrade shall be brought to grade. Scarifying, blading, rolling and other methods shall be performed to provide a thoroughly compacted subgrade shaped to the lines and grades shown on the plans. All ruts or rough places that develop in the completed subgrade shall be graded, re-compacted, and retested. The Contractor shall protect the subgrade from damage and limit hauling over the finished subgrade to only traffic essential for construction purposes.

The Contractor shall maintain the completed course in satisfactory condition throughout placement of subsequent layers. No subbase, base, or surface course shall be placed on the subgrade until the subgrade has been accepted by the RPR.

152-2.12 Haul. All hauling will be considered a necessary and incidental part of the work. The Contractor shall include the cost in the contract unit price for the pay of items of work involved. No payment will be made separately or directly for hauling on any part of the work.

The Contractor's equipment shall not cause damage to any excavated surface, compacted lift or to the subgrade as a result of hauling operations. Any damage caused as a result of the Contractor's hauling operations shall be repaired at the Contractor's expense.

The Contractor shall be responsible for providing, maintaining and removing any haul roads or routes within or outside of the work area, and shall return the affected areas to their former condition, unless otherwise authorized in writing by the Owner. No separate payment will be made for any work or materials associated with providing, maintaining and removing haul roads or routes.

152-2.13 Surface Tolerances. In those areas on which a subbase or base course is to be placed, the surface shall be tested for smoothness and accuracy of grade and crown. Any portion lacking the required smoothness or failing in accuracy of grade or crown shall be scarified to a depth of at least 3 inches, reshaped and re-compacted to grade until the required smoothness and accuracy are obtained and approved by the RPR. The Contractor shall perform all final smoothness and grade checks in the presence of the RPR. Any deviation in surface tolerances shall be corrected by the Contractor at the Contractor's expense.

a. Smoothness. The finished surface shall not vary more than +/- ½ inch when tested with a 12-foot straightedge applied parallel with and at right angles to the centerline. The straightedge shall be moved continuously forward at half the length of the 12-foot straightedge for the full length of each line on a 50-foot grid.

b. Grade. The grade and crown shall be measured on a 50-foot grid and shall be within +/-0.05 feet of the specified grade.

On safety areas, turfed areas and other designated areas within the grading limits where no subbase or base is to placed, grade shall not vary more than 0.10 feet from specified grade. Any deviation in excess of this amount shall be corrected by loosening, adding or removing materials, and reshaping.

152-2.14 Topsoil. When topsoil is specified or required as shown on the plans or under Item T-905, it shall be salvaged from stripping or other grading operations. The topsoil shall meet the requirements of Item T-905. If, at the time of excavation or stripping, the topsoil cannot be placed in its final section of finished construction, the material shall be stockpiled at approved locations. Stockpiles shall be located as shown on the plans and the approved CSPP, and shall not be placed on areas that subsequently will require any excavation or embankment fill. If, in the judgment of the RPR, it is practical to place the salvaged topsoil at the time of excavation or stripping, the material shall be placed in its final position without stockpiling or further re-handling.

Upon completion of grading operations, stockpiled topsoil shall be handled and placed as shown on the plans and as required in Item T-905. Topsoil shall be paid for as provided in Item T-905. No direct payment will be made for topsoil under Item P-152.

METHOD OF MEASUREMENT

152-3.1 Measurement for payment specified by the cubic yard shall be computed by the `the comparison of digital terrain model (DTM) surfaces for computation of neat line design quantities`. The end area is that bound by the original ground line established by field cross-sections and the final theoretical pay line established by cross-sections shown on the plans, subject to verification by the RPR.

152-3.1 The quantity of unclassified excavation to be paid for shall be the number of cubic yards measured in its original position. Measurement shall not include the quantity of materials excavated without authorization beyond normal slope lines, or the quantity of material used for purposes other than those directed.

Stockpiled material shall not be measured for payment in the stockpiled position.

BASIS OF PAYMENT

152-4.1 Unclassified excavation payment shall be made at the contract unit price per cubic yard. This price shall be full compensation for furnishing all materials, labor, equipment, tools, and incidentals necessary to complete the item.

Payment will be made under:

Item P-152-1	Unclassified Excavation - per cubic yard
Item P-152-2	Preconstruction Survey of Phase 1 Limits of Grading – per lump sum

REFERENCES

The publications listed below form a part of this specification to the extent referenced. The publications are referred to within the text by the basic designation only.

American Association of State Highway and Transportation Officials (AASHTO)

AASHTO T-180	Standard Method of Test for Moisture-Density Relations of Soils Using a 4.54-kg (10-lb) Rammer and a 457-mm (18-in.) Drop

ASTM International (ASTM)

ASTM D698	Standard Test Methods for Laboratory Compaction Characteristics of Soil Using Standard Effort (12,400 ft-lbf/ft^3 (600 kN-m/m^3))
ASTM D1556	Standard Test Method for Density and Unit Weight of Soil in Place by the Sand-Cone Method
ASTM D1557	Standard Test Methods for Laboratory Compaction Characteristics of Soil Using Modified Effort (56,000 ft-lbf/ft^3 (2700 kN-m/m^3))
ASTM D6938	Standard Test Methods for In-Place Density and Water Content of Soil and Soil-Aggregate by Nuclear Methods (Shallow Depth)

Advisory Circulars (AC)

AC 150/5370-2	Operational Safety on Airports During Construction Software

Software

FAARFIELD – FAA Rigid and Flexible Iterative Elastic Layered Design

U.S. Department of Transportation

FAA RD-76-66	Design and Construction of Airport Pavements on Expansive Soils

END OF ITEM P-152

Item P-153

Controlled Low-Strength Material (CLSM)

DESCRIPTION

153-1.1 This item shall consist of furnishing, transporting, and placing a controlled low-strength material (CLSM) as flowable backfill in trenches or at other locations shown on the plans or as directed by the Resident Project Representative (RPR).

MATERIALS

153-2.1 Materials.

a. Cement. Cement shall conform to the requirements of ASTM **[150]** Type **[I]**.

b. Fly ash. Fly ash shall conform to ASTM C618, Class C or F.

c. Fine aggregate (sand). Fine aggregate shall conform to the requirements of ASTM C33 except for aggregate gradation. Any aggregate gradation which produces the specified performance characteristics of the CLSM and meets the following requirements, will be accepted.

Sieve Size	Percent Passing by weight
3/4 inch	100
No. 200	0 - 12

d. Water. Water used in mixing or curing shall be from potable water sources. Other sources shall be tested in accordance with ASTM C1602 prior to use.

MIX DESIGN

153-3.1 Proportions. The Contractor shall submit, to the RPR, a mix design including the proportions and source of aggregate, fly ash, cement, water, and approved admixtures. No CLSM mixture shall be produced for payment until the RPR has given written approval of the proportions. The proportions shall be prepared by a laboratory and shall remain in effect for the duration of the project. The proportions shall establish a single percentage or weight for aggregate, fly ash, cement, water, and any admixtures proposed. Laboratory costs are incidental to this item.

a. Compressive strength. CLSM shall be designed to achieve a 28-day compressive strength of 100 to 200 psi when tested in accordance with ASTM D4832, with no significant strength gain after 28 days.

b. Consistency. Design CLSM to achieve a consistency that will produce an approximate 8-inch diameter circular-type spread without segregation. CLSM consistency shall be determined per ASTM D6103.

CONSTRUCTION METHODS

153-4.1 Placement.

a. Placement. CLSM may be placed by any reasonable means from the mixing unit into the space to be filled. Agitation is required during transportation and waiting time. Placement shall be performed so structures or pipes are not displaced from their final position and intrusion of CLSM into unwanted areas

is avoided. The material shall be brought up uniformly to the fill line shown on the plans or as directed by the RPR. Each placement of CLSM shall be as continuous an operation as possible. If CLSM is placed in more than one lift, the base lift shall be free of surface water and loose foreign material prior to placement of the next lift.

b. Contractor Quality Control. The Contractor shall collect all batch tickets to verify the CLSM delivered to the project conforms to the mix design. The Contractor shall verify daily that the CLSM is consistent with 153-3.1a and 153-3.1b. Adjustments shall be made as necessary to the proportions and materials as needed. The Contractor shall provide all batch tickets to the RPR.

c. Limitations of placement. CLSM shall not be placed on frozen ground. Mixing and placing may begin when the air or ground temperature is at least 35°F and rising. Mixing and placement shall stop when the air temperature is 40°F and falling or when the anticipated air or ground temperature will be 35°F or less in the 24-hour period following proposed placement. At the time of placement, CLSM shall have a temperature of at least 40°F.

153-4.2 Curing and protection

a. Curing. The air in contact with the CLSM shall be maintained at temperatures above freezing for a minimum of 72 hours. If the CLSM is subjected to temperatures below 32°F the material may be rejected by the RPR if damage to the material is observed.

b. Protection. The CLSM shall not be subject to loads and shall remain undisturbed by construction activities for a period of 48 hours or until a compressive strength of 15 psi is obtained. The Contractor shall be responsible for providing evidence to the RPR that the material has reached the desired strength. Acceptable evidence shall be based upon compressive tests made in accordance with paragraph 153-3.1a.

153-4.3 Quality Assurance (QA) Acceptance. CLSM QA acceptance shall be based upon batch tickets provided by the Contractor to the RPR to confirm that the delivered material conforms to the mix design.

METHOD OF MEASUREMENT

153-5.1 Measurement.

No separate measurement for payment shall be made for controlled low strength material (CLSM). CLSM shall be considered necessary and incidental to the work of this Contract.

BASIS OF PAYMENT

153-6.1 Payment.

No payment will be made separately or directly for controlled low strength material (CLSM). CLSM shall be considered necessary and incidental to the work of this Contract.

REFERENCES

The publications listed below form a part of this specification to the extent referenced. The publications are referred to within the text by the basic designation only.

ASTM International (ASTM)

ASTM C33 Standard Specification for Concrete Aggregates

ASTM C150	Standard Specification for Portland Cement
ASTM C618	Standard Specification for Coal Fly Ash and Raw or Calcined Natural Pozzolan for Use in Concrete
ASTM C595	Standard Specification for Blended Hydraulic Cements
ASTM C1602	Standard Specification for Mixing Water Used in the Production of Hydraulic Cement Concrete
ASTM D4832	Standard Test Method for Preparation and Testing of Controlled Low-Strength Material (CLSM) Test Cylinders
ASTM D6103	Flow Consistency of Controlled Low Strength Material (CLSM)

END OF ITEM P-153

Item P-154

Subbase Course

DESCRIPTION

154-1.1 This item shall consist of a subbase course composed of granular materials constructed on a prepared subgrade or underlying course in accordance with these specifications, and in conformity with the dimensions and typical cross-section shown on the plans.

MATERIALS

154-2.1 Materials. The subbase material shall consist of hard durable particles or fragments of granular aggregates. The material may be obtained from gravel pits, stockpiles, or may be produced from a crushing and screening plant with proper blending. The materials from these sources shall meet the requirements for gradation, quality, and consistency. The material shall be free from vegetative matter, excessive amounts of clay, and other objectionable substances; uniformly blended; and be capable of being compacted into a dense, stable subbase.

The subbase material shall exhibit a California Bearing Ratio (CBR) value of at least 20 when tested in accordance with ASTM D1883. The subbase material shall meet the gradation specified in the table below.

Subbase Gradation Requirements

Sieve designation	**Percentage by weight passing sieves**		**Contractor's Final Gradation**	**Job Control Grading Band Tolerances[1] (Percent)**
	Subbase Aggregate			
3 inch	100			0
1 1/2 inch				0
3/4 inch	70-100			±10
No. 10	20-100			±10
No. 40	5-60			±5
No. 200	[0-15]			±5

[1]The "Job Control Grading Band Tolerances" shall be applied to "Contractor's Final Gradation" to establish the job control grading band.

The portion of the material passing the No. 40 sieve shall have a liquid limit of not more than 25 and a plasticity index of not more than six (6) when tested in accordance with ASTM D4318.

154-2.2 Sampling and testing.

a. Aggregate base materials. Samples shall be taken by the Contractor per ASTM D75 for initial aggregate subbase requirements and gradation. Material shall meet the requirements in paragraphs 154-2.1. The Contractor shall submit to the Resident Project Representative (RPR) certified test results showing that the aggregate meets the Material requirements of this section. Tests shall be representative of the material to be used for the project.

b. Gradation requirements. The Contractor shall take at least **one** aggregate subbase sample per day in the presence of the RPR to check the final gradation. Samples shall be taken from the in-place, un-compacted material at sampling locations determined by the RPR on a random basis per ASTM D3665. Sampling shall be per ASTM D75 and tested per ASTM C136 and ASTM C117. Results shall be furnished to the RPR by the Contractor each day during construction. Material shall meet the requirements in paragraph 154-2.1.

154-2.3 Separation Geotextile. Not used.

154-2.4 Geogrid. Not used.

CONSTRUCTION METHODS

154-3.1 General. The subbase course shall be placed where designated on the plans or as directed by the RPR. The material shall be shaped and thoroughly compacted within the tolerances specified.

Granular subbases which, due to grain sizes or shapes, are not sufficiently stable to support the construction equipment without movement, shall be mechanically modified to the depth necessary to provide stability as directed by the RPR. The mechanical modification shall include the addition of a fine-grained medium to bind the particles of the subbase material sufficiently to furnish a bearing strength, so the course will not deform under construction equipment traffic.

154-3.2 Preparing underlying course. Prior to constructing the subbase course, clean the underlying course or subgrade of all foreign substances. The surface of the underlying course or subgrade shall meet specified compaction and surface tolerances in accordance with Item P-152. Correct ruts, soft yielding spots in the underlying courses, and subgrade areas having inadequate compaction and/or deviations of the surface from the specified requirements, by loosening and removing soft or unsatisfactory material, adding approved material, reshaping to line and grade, and recompacting to specified density requirements. For cohesionless underlying courses or subgrades containing sands or gravels, as defined in ASTM D2487, the surface shall be stabilized prior to placement of the overlying course by mixing the overlying course material into the underlying course, and compacting by approved methods. The stabilized material shall be considered as part of the underlying course and shall meet all requirements for the underlying course. The finished underlying course shall not be disturbed by traffic or other operations and shall be maintained in a satisfactory condition until the overlying course is placed. The underlying course shall be checked and accepted by the RPR before placing and spreading operations are started.

To protect the subgrade and to ensure proper drainage, spreading of the subbase shall begin along the centerline of the pavement on a crowned section or on the high side of pavements with a one-way slope.

154-3.3 Control Strip. The first half-day of subbase construction shall be considered as a control strip for the Contractor to demonstrate, in the presence of the RPR, that the materials, equipment, and construction processes meet the requirements of this specification. The sequence and manner of rolling necessary to obtain specified density requirements shall be determined. The maximum compacted thickness may be increased to a maximum of 12 inches upon the Contractor's demonstration that approved equipment and operations will uniformly compact the lift to the specified density. The RPR must witness this demonstration and approve the lift thickness prior to full production.

Control strips that do not meet specification requirements shall be reworked, re-compacted, or removed and replaced at the Contractor's expense. Full operations shall not begin until the control strip has been accepted by the RPR. The Contractor shall use the same equipment, materials, and construction methods for the remainder of construction, unless adjustments made by the Contractor are approved in advance by the RPR.

154-3.4 Placement. The material shall be placed and spread on the prepared underlying layer by spreader boxes or other devices as approved by the RPR, to a uniform thickness and width. The equipment shall have positive thickness controls to minimize the need for additional manipulation of the material. Dumping from vehicles that require re-handling shall not be permitted. Hauling over the uncompacted base course shall not be permitted. The material shall not be placed when the underlying course is soft or yielding.

The material shall meet gradation and moisture requirements prior to compaction. Material may be free-draining and the minimum moisture content shall be established for placement and compaction of the material.

The material shall be constructed in lifts as established in the control strip, but not less than 4 inches nor more than 12 inches of compacted thickness.

When more than one lift is required to establish the layer thickness shown on the plans, the construction procedure described here shall apply to each lift. No lift shall be covered by subsequent lifts until tests verify that compaction requirements have been met. The Contractor shall rework, re-compact and retest any material placed which does not meet the specifications.

154-3.5 Compaction. The subbase material shall be compacted, adjusting moisture as necessary, to be within ±2% of optimum moisture. The field density of the compacted material shall be at least **100%** of the maximum density as specified in paragraph 154-3.9a. If the specified density is not attained, the area of the lift represented by the test shall be reworked and/or re-compacted and additional random tests made. This procedure shall be followed until the specified density is reached. Maximum density refers to maximum dry density at optimum moisture content unless otherwise specified.

154-3.6 Weather limitation. Material shall not be placed unless the ambient air temperature is at least 40°F and rising. Work on subbase course shall not be conducted when the subgrade is wet or frozen or the subbase material contains frozen material.

154-3.7 Maintenance. No base or surface course shall be placed on the subbase until the subbase has been accepted by the RPR. The Contractor shall maintain the completed course in satisfactory condition throughout placement of subsequent layers. When material has been exposed to excessive rain, snow, or freeze-thaw conditions, the Contractor shall verify that materials still meet all specification requirements before placement of additional material. Equipment may be routed over completed sections of subbase course, provided the equipment does not damage the subbase course and the equipment is routed over the full width of the completed subbase course. Any damage to the subbase course from routing equipment over the subbase course shall be repaired by the Contractor at their expense.

154-3.8 Surface tolerance. In those areas on which a subbase or base course is to be placed, the surface shall be tested for smoothness and accuracy of grade and crown. Any portion lacking the required smoothness or failing in accuracy of grade or crown shall be scarified to a depth of at least 3 inches, reshaped and re-compacted to grade until the required smoothness and accuracy are obtained and approved by the RPR. The Contractor shall perform all final smoothness and grade checks in the presence of the RPR. Any deviation in surface tolerances shall be corrected by the Contractor at the Contractor's expense.

a. Smoothness. The finished surface shall not vary more than +/- ½ inch when tested with a 12-foot straightedge applied parallel with and at right angles to the centerline. The straightedge shall be moved continuously forward at half the length of the 12-foot straightedge for the full length of each line on a 50-foot grid.

b. Grade. The grade and crown shall be measured on a 50-foot grid and shall be within +/-0.05 feet of the specified grade.

154-3.9 Acceptance sampling and testing. The aggregate base course shall be accepted for density and thickness on an area basis. Two test shall be made for density and thickness for each **1200 square yards** . Sampling locations will be determined on a random basis per ASTM D3665.

a. Density. The **Contractor's laboratory shall perform all quality control density tests in the RPR's presence and provide the test results upon completion to the RPR for acceptance**. The Owner may retain the services of an independent quality assurance (QA) testing firm to perform additional QA testing for acceptance determination.

Each area shall be accepted for density when the field density is at least **100%** of the maximum density of laboratory specimens compacted and tested per ASTM **D1557**. The in-place field density shall be determined per **ASTM D1556. or ASTM D6938 using Procedure A, the direct transmission method, and ASTM D6938 shall be used to determine the moisture content of the material. The machine shall be calibrated in accordance with ASTM D6938.** . If the specified density is not attained, the area represented by the failed test shall be reworked and/or recompacted and two additional random tests made. This procedure shall be followed until the specified density is reached. Maximum density refers to maximum dry density at optimum moisture content unless otherwise specified.

When the material has greater than 30 percent retained on the ¾ inch sieve, use methods in **ASTM D1557** and the procedures in AASHTO T180 Annex for correction of maximum dry density and optimum moisture for oversized particles.

b. Thickness. The thickness of the base course shall be within +0 and -1/2 inch of the specified thickness as determined by **survey on a 25-foot by 25-foot survey grid performed before and after placement of the subbase course**. Where the thickness is deficient by more than 1/2-inch, the Contractor shall correct such areas at no additional cost by scarifying to a depth of at least 3 inches, adding new material of proper gradation, and the material shall be blended and recompacted to grade. The Contractor shall replace, at his expense, base material where depth tests have been taken.

METHOD OF MEASUREMENT

154-4.1 Subbase course shall be measured by the number of **square yards** of subbase course material placed and compacted to specified density and plan thickness requirements in the completed course. The quantity of subbase course material shall be measured in final position based upon **depth tests or cores taken as directed by the RPR, at the rate of two test per each 1200 square yards of subbase course** . On individual depth measurements, thicknesses more than 1/2 inch in excess of that shown on the plans shall be considered as the specified thickness plus 1/2 inch in computing the yardage for payment. Subbase materials shall not be included in any other excavation quantities.

.

BASIS OF PAYMENT

154-5.1 Payment shall be made at the contract unit price per square yard for subbase course. This price shall be full compensation for furnishing all materials; for all preparation, hauling, and placing of these materials; and for all labor, equipment, tools, and incidentals necessary to complete the item.

Payment will be made under:

Item P-154	Subbase Course - per square yard

REFERENCES

The publications listed below form a part of this specification to the extent referenced. The publications are referred to within the text by the basic designation only.

ASTM International (ASTM)

ASTM C117	Standard Test Method for Materials Finer than 75-µm (No. 200) Sieve in Mineral Aggregates by Washing
ASTM C136	Standard Test Method for Sieve Analysis of Fine and Coarse Aggregates
ASTM D75	Standard Practice for Sampling Aggregates
ASTM D698	Standard Test Methods for Laboratory Compaction Characteristics of Soil Using Standard Effort (12,400 ft-lbf/ft^3 (600 kN-m/m^3))
ASTM D1556	Standard Test Method for Density and Unit Weight of Soil in Place by the Sand-Cone Method
ASTM D1557	Standard Test Methods for Laboratory Compaction Characteristics of Soil Using Modified Effort (56,000 ft-lbf/ft^3 (2,700 kN-m/m^3))
ASTM D2487	Standard Practice for Classification of Soils for Engineering Purposes (Unified Soil Classification System)
ASTM D4253	Standard Test Methods for Maximum Index Density and Unit Weight of Soils Using a Vibratory Table
ASTM D4759	Practice for Determining the Specification Conformance of Geosynthetics
ASTM D4318	Standard Test Methods for Liquid Limit, Plastic Limit, and Plasticity Index of Soils
ASTM D6938	Standard Test Method for In-Place Density and Water Content of Soil and Soil-Aggregate by Nuclear Methods (Shallow Depth)

American Association of State Highway and Transportation Officials (AASHTO)

M 288	Geotextile Specification for Highway Applications

END OF ITEM P-154

Item P-209

Crushed Aggregate Base Course

DESCRIPTION

209-1.1 This item consists of a base course composed of crushed aggregate base constructed on a prepared course in accordance with these specifications and in conformity to the dimensions and typical cross-sections shown on the plans.

MATERIALS

209-2.1 Crushed aggregate base. Crushed aggregate shall consist of clean, sound, durable particles of crushed stone, crushed gravel, and shall be free from coatings of clay, silt, organic material, clay lumps or balls or other deleterious materials or coatings. The method used to produce the crushed gravel shall result in the fractured particles in the finished product as consistent and uniform as practicable. Fine aggregate portion, defined as the portion passing the No. 4 sieve shall consist of fines from the coarse aggregate crushing operation. The fine aggregate shall be produced by crushing stone, gravel, that meet the coarse aggregate requirements for wear and soundness. Aggregate base material requirements are listed in the following table.

Crushed Aggregate Base Material Requirements

Material Test	Requirement	Standard
Coarse Aggregate		
Resistance to Degradation	Loss: 45% maximum	ASTM C131
Soundness of Aggregates by Use of Sodium Sulfate **or** Magnesium Sulfate	Loss after 5 cycles: 12% maximum using Sodium sulfate - or - 18% maximum using magnesium sulfate	ASTM C88
Percentage of Fractured Particles	Minimum 90% by weight of particles with at least two fractured faces and 100% with at least one fractured face[1]	ASTM D5821
Flat Particles, Elongated Particles, or Flat and Elongated Particles	10% maximum, by weight, of flat, elongated, or flat and elongated particles [2]	ASTM D4791
Clay lumps and friable particles	Less than or equal to 3 percent	ASTM C142
Fine Aggregate		
Liquid limit	Less than or equal to 25	ASTM D4318
Plasticity Index	Not more than five (5)	ASTM D4318

[1] The area of each face shall be equal to at least 75% of the smallest mid-sectional area of the piece. When two fractured faces are contiguous, the angle between the planes of fractures shall be at least 30 degrees to count as two fractured faces.

[2] A flat particle is one having a ratio of width to thickness greater than five (5); an elongated particle is one having a ratio of length to width greater than five (5).

209-2.2 Gradation requirements. The gradation of the aggregate base material shall meet the requirements of the gradation given in the following table when tested per ASTM C117 and ASTM C136. The gradation shall be well graded from coarse to fine and shall not vary from the lower limit on one sieve to the high limit on an adjacent sieve or vice versa.

Gradation of Aggregate Base

Sieve Size	Design Range Percentage by Weight passing	Contractor's Final Gradation	Job Control Grading Band Tolerances[1] (Percent)
2 inch	100		0
1-1/2 inch	95-100		±5
1 inch	70-95		±8
3/4 inch	55-85		±8
No. 4	30-60		±8
No. 40[2]	10-30		±5
No. 200[2]	0-10		±3

[1] The "Job Control Grading Band Tolerances for Contractor's Final Gradation" in the table shall be applied to "Contractor's Final Gradation" to establish a job control grading band. The full tolerance still applies if application of the tolerances results in a job control grading band outside the design range.

[2] The fraction of material passing the No 200 sieve shall not exceed two-thirds the fraction passing the No 40 sieve.

209-2.3 Sampling and Testing.

a. Aggregate base materials. The Contractor shall take samples of the aggregate base in accordance with ASTM D75 to verify initial aggregate base requirements and gradation. Material shall meet the requirements in paragraph 209-2.1. This sampling and testing will be the basis for approval of the aggregate base quality requirements.

b. Gradation requirements. The Contractor shall take at least **two** aggregate base samples per day in the presence of the Resident Project Representative (RPR) to check the final gradation. Sampling shall be per ASTM D75. Material shall meet the requirements in paragraph 209-2.2. The samples shall be taken from the in-place, un-compacted material at sampling points and intervals designated by the RPR.

209-2.4 Separation Geotextile. Not used.

CONSTRUCTION METHODS

209-3.1 Control strip. The first half-day of construction shall be considered the control strip. The Contractor shall demonstrate, in the presence of the RPR, that the materials, equipment, and construction processes meet the requirements of the specification. The sequence and manner of rolling necessary to obtain specified density requirements shall be determined. The maximum compacted thickness may be increased to a maximum of 12 inches upon the Contractor's demonstration that approved equipment and operations will uniformly compact the lift to the specified density. The RPR must witness this demonstration and approve the lift thickness prior to full production.

Control strips that do not meet specification requirements shall be reworked, re-compacted or removed and replaced at the Contractor's expense. Full operations shall not continue until the control strip has been accepted by the RPR. The Contractor shall use the same equipment, materials, and construction methods for the remainder of construction, unless adjustments made by the Contractor are approved by the RPR.

209-3.2 Preparing underlying subgrade and/or subbase. The underlying subgrade and/or subbase shall be checked and accepted by the RPR before base course placing and spreading operations begin. Re-proof rolling of the subgrade or proof rolling of the subbase in accordance with Item P-152, at the Contractor's expense, may be required by the RPR if the Contractor fails to ensure proper drainage or protect the subgrade and/or subbase. Any ruts or soft, yielding areas due to improper drainage conditions, hauling, or any other cause, shall be corrected before the base course is placed. To ensure proper drainage, the spreading of the base shall begin along the centerline of the pavement on a crowned section or on the high side of the pavement with a one-way slope.

209-3.3 Production. The aggregate shall be uniformly blended and, when at a satisfactory moisture content per paragraph 209-3.5, the approved material may be transported directly to the placement.

209-3.4 Placement. The aggregate shall be placed and spread on the prepared underlying layer by spreader boxes or other devices as approved by the RPR, to a uniform thickness and width. The equipment shall have positive thickness controls to minimize the need for additional manipulation of the material. Dumping from vehicles that require re-handling shall not be permitted. Hauling over the uncompacted base course shall not be permitted.

The aggregate shall meet gradation and moisture requirements prior to compaction. The base course shall be constructed in lifts as established in the control strip, but not less than 4 inches nor more than 12 inches of compacted thickness.

When more than one lift is required to establish the layer thickness shown on the plans, the construction procedure described here shall apply to each lift. No lift shall be covered by subsequent lifts until tests verify that compaction requirements have been met. The Contractor shall rework, re-compact and retest any material placed which does not meet the specifications at the Contractor's expense.

209-3.5 Compaction. Immediately after completion of the spreading operations, compact each layer of the base course, as specified, with approved compaction equipment. The number, type, and weight of rollers shall be sufficient to compact the material to the required density within the same day that the aggregate is placed on the subgrade.

The field density of each compacted lift of material shall be at least **100%** of the maximum density of laboratory specimens prepared from samples of the subbase material delivered to the jobsite. The laboratory specimens shall be compacted and tested in accordance with ASTM D698 for parking lot pavements in Phase 1 and **ASTM D1557** for all other pavement areas. The moisture content of the material during placing operations shall be within ±2 percentage points of the optimum moisture content as determined by ASTM **D698** for parking lot pavements in Phase 1 and ASTM D1557 for all other pavement areas. Maximum density refers to maximum dry density at optimum moisture content unless otherwise specified. When the material has greater than 30 percent retained on the ¾ inch sieve, follow the methods in ASTM D698 **or** ASTM D1557 **or** procedures in AASHTO T180 Annex for correction of maximum dry density and optimum moisture for oversized particles.

209-3.6 Weather limitations. Material shall not be placed unless the ambient air temperature is at least 40°F and rising. Work on base course shall not be conducted when the subgrade or subbase is wet or frozen or the base material contains frozen material.

209-3.7 Maintenance. The base course shall be maintained in a condition that will meet all specification requirements. When material has been exposed to excessive rain, snow, or freeze-thaw conditions, prior to

placement of additional material, the Contractor shall verify that materials still meet all specification requirements. Equipment may be routed over completed sections of base course, provided that no damage results and the equipment is routed over the full width of the completed base course. Any damage resulting to the base course from routing equipment over the base course shall be repaired by the Contractor at the Contractor's expense.

209-3.8 Surface tolerances. After the course has been compacted, the surface shall be tested for smoothness and accuracy of grade and crown. Any portion lacking the required smoothness or failing in accuracy of grade or crown shall be scarified to a depth of at least 3 inches, reshaped and recompacted to grade until the required smoothness and accuracy are obtained and approved by the RPR. Any deviation in surface tolerances shall be corrected by the Contractor at the Contractor's expense. The smoothness and accuracy requirements specified here apply only to the top layer when base course is constructed in more than one layer.

a. Smoothness. The finished surface shall not vary more than 3/8-inch when tested with a 12-foot straightedge applied parallel with and at right angles to the centerline. The straightedge shall be moved continuously forward at half the length of the 12-foot straightedge for the full length of each line on a 50-foot grid.

b. Grade. The grade and crown shall be measured on a 50-foot grid and shall be within +0 and -1/2 inch of the specified grade.

209-3.9 Acceptance sampling and testing. Crushed aggregate base course shall be accepted for density and thickness on an area basis. Two tests shall be made for density and thickness for each **[** 1200 square yds **]**. Sampling locations will be determined on a random basis per ASTM D3665

a. Density. The **Contractor's laboratory shall perform all quality control density tests in the RPR's presence and provide the test results upon completion to the RPR for acceptance** . The Owner may retain the services of an independent quality assurance (QA) testing firm to perform additional QA testing for acceptance determination.

Each area shall be accepted for density when the field density is at least **100%** of the maximum density of laboratory specimens compacted and tested per ASTM D698 for all parking lot pavement in Phase 1 and ASTM D1557 for all other pavement areas. The in-place field density shall be determined per **ASTM D1556. or ASTM D6938 using Procedure A, the direct transmission method, and ASTM D6938 shall be used to determine the moisture content of the material. The machine shall be calibrated in accordance with ASTM D6938.** . If the specified density is not attained, the area represented by the failed test must be reworked and/or recompacted and two additional random tests made. This procedure shall be followed until the specified density is reached. Maximum density refers to maximum dry density at optimum moisture content unless otherwise specified.

b. Thickness. The thickness of the base course shall be within +0 and -1/2 inch of the specified thickness as determined by **survey on a 25-foot by 25-foot survey grid performed before and after placement of the base course.** Where the thickness is deficient by more than 1/2-inch, the Contractor shall correct such areas at no additional cost by scarifying to a depth of at least 3 inches, adding new material of proper gradation, and the material shall be blended and recompacted to grade. The Contractor shall replace, at his expense, base material where depth tests have been taken.

METHOD OF MEASUREMENT

209-4.1 The quantity of crushed aggregate base course will be determined by measurement of the number of **square yards** of material actually constructed and accepted by the RPR as complying with the plans and specifications. Base materials shall not be included in any other excavation quantities.

BASIS OF PAYMENT

209-5.1 Payment shall be made at the contract unit price per **square yard** for crushed aggregate base course. This price shall be full compensation for furnishing all materials, for preparing and placing these materials, and for all labor, equipment tools, and incidentals necessary to complete the item.

Payment will be made under:

Item P-209-1	Optional Base Course - per square yard
Item P-209-2	6" Crushed Aggregate Base Course - per square yard

REFERENCES

The publications listed below form a part of this specification to the extent referenced. The publications are referred to within the text by the basic designation only.

ASTM International (ASTM)

ASTM C29	Standard Test Method for Bulk Density ("Unit Weight") and Voids in Aggregate
ASTM C88	Standard Test Method for Soundness of Aggregates by Use of Sodium Sulfate or Magnesium Sulfate
ASTM C117	Standard Test Method for Materials Finer than 75-µm (No. 200) Sieve in Mineral Aggregates by Washing
ASTM C131	Standard Test Method for Resistance to Degradation of Small-Size Coarse Aggregate by Abrasion and Impact in the Los Angeles Machine
ASTM C136	Standard Test Method for Sieve or Screen Analysis of Fine and Coarse Aggregates
ASTM C142	Standard Test Method for Clay Lumps and Friable Particles in Aggregates
ASTM D75	Standard Practice for Sampling Aggregates
ASTM D698	Standard Test Methods for Laboratory Compaction Characteristics of Soil Using Standard Effort (12,400 ft-lbf/ft^3 (600 kN-m/m^3))
ASTM D1556	Standard Test Method for Density and Unit Weight of Soil in Place by the Sand-Cone Method
ASTM D1557	Standard Test Methods for Laboratory Compaction Characteristics of Soil Using Modified Effort (56,000 ft-lbf/ft^3 (2700 kN-m/m^3))
ASTM D2167	Standard Test Method for Density and Unit Weight of Soil in Place by the Rubber Balloon Method

ASTM D2419	Standard Test Method for Sand Equivalent Value of Soils and Fine Aggregate
ASTM D3665	Standard Practice for Random Sampling of Construction Materials
ASTM D4318	Standard Test Methods for Liquid Limit, Plastic Limit, and Plasticity Index of Soils
ASTM D4491	Standard Test Methods for Water Permeability of Geotextiles by Permittivity
ASTM D4643	Standard Test Method for Determination of Water Content of Soil and Rock by Microwave Oven Heating
ASTM D4751	Standard Test Methods for Determining Apparent Opening Size of a Geotextile
ASTM D4791	Standard Test Method for Flat Particles, Elongated Particles, or Flat and Elongated Particles in Coarse Aggregate
ASTM D5821	Standard Test Method for Determining the Percentage of Fractured Particles in Coarse Aggregate
ASTM D6938	Standard Test Method for In-Place Density and Water Content of Soil and Soil-Aggregate by Nuclear Methods (Shallow Depth)
ASTM D7928	Standard Test Method for Particle-Size Distribution (Gradation) of Fine-Grained Soils Using the Sedimentation (Hydrometer) Analysis

American Association of State Highway and Transportation Officials (AASHTO)

M288	Standard Specification for Geosynthetic Specification for Highway Applications

END OF ITEM P-209

Item P-211

Lime Rock Base Course

DESCRIPTION

211-1.1 This item shall consist of a base course composed of lime rock constructed on the prepared underlying course per these specifications and shall conform to the dimensions and typical cross-section shown on the plans.

MATERIALS

211-2.1 Materials. The lime rock base course material shall consist of fossiliferous limestone of uniform quality. The material shall not contain hard or flinty pieces that will cause a rough surface containing pits and pockets. The rock shall show no tendency to "air slake" or undergo chemical change when exposed to the weather. The material when watered and rolled shall be capable of compacting to a dense and well-bonded base.

Lime Rock Base Course Material Properties[2]

	Lime Rock	**Oolitic**	**Non-Oolitic**
Carbonates of calcium and magnesium[1]	95% minimum	70% minimum	75% minimum
Oxides of iron and aluminum[1]	Less than or equal to 2%	Less than or equal to 2%	Less than or equal to 2%
Liquid limit	Not greater than 35	NA	Not greater than 35
Plasticity Index	Not greater than 6	NA	Not greater than 6
Organic or foreign matter	Not more than 0.5%	Not more than 0.5%	Not more than 0.5%
Lime Bearing Ratio (LBR)[3] at 0 to +1.5% optimum	125	125	125

[1] The combined amount of carbonates, oxides, and silica shall be at least 97%. The material shall be non-plastic.

[2] The chemical analysis of lime rock shall consist of determining the insoluble silica, iron oxide, and alumina by solution of the sample in hydrochloric (HCl) acid, evaporating, dehydrating, re-dissolving the residue, and neutralizing with ammonium hydroxide, filtering, washing, and igniting the residue lime rock. The difference between the percentage of insoluble matter and 100% is reported as carbonates of calcium and magnesium.

[3] FM 5-515, Florida Method of Test for Lime Rock Bearing Ratio

Lime Rock Base Course Gradation

Sieve Designation (square openings)	**Percentage by Weight Passing Sieves**
3-1/2 inch	100
3/4 inch	50-100

All fine material shall consist entirely of dust of fracture (fine portion passing the No. 10 sieve).

211-2.2 Sampling and Testing.

a. Aggregate base materials. The Contractor shall take samples of the aggregate base in accordance with ASTM D75 to verify initial aggregate base requirements and gradation. Material shall meet the requirements in paragraph 211-2.1. This sampling and testing will be the basis for approval of the aggregate base quality requirements.

b. Gradation requirements. The Contractor shall take at least **two** aggregate base samples per day in the presence of the Resident Project Representative (RPR) to check the final gradation. Sampling shall be per ASTM D75. Material shall meet the requirements in paragraph 209-2.1. The lot will be consistent with the lot size used for density. The samples shall be taken from the in-place, un-compacted material at sampling points and intervals designated by the RPR.

211-2.3 Separation Geotextile. Not used.

CONSTRUCTION METHODS

211-3.1 Control strip. The first half-day of construction shall be considered the control strip. The Contractor shall demonstrate, in the presence of the RPR, that the materials, equipment, and construction processes meet the requirements of the specification. The sequence and manner of rolling necessary to obtain specified density requirements shall be determined. Control strips that do not meet specification requirements shall be removed and replaced at the Contractor's expense. Full operations shall not continue until the control strip has been accepted by the RPR. Upon acceptance of the control strip by the RPR, the Contractor shall use the same equipment, materials, and construction methods for the remainder of construction, unless adjustments made by the Contractor are approved in advance by the RPR.

211-3.2 Preparing underlying course. The RPR shall check and accept the underlying course before placing and spreading operations are started. Any ruts or soft yielding places caused by improper drainage conditions, hauling, or any other cause shall be corrected at the Contractor's expense before the base course is placed. Material shall not be placed on frozen subgrade.

211-3.3 Placement. The material shall be placed and spread on the prepared underlying layer by spreader boxes or other devices as approved by the RPR, to a uniform thickness and width. The equipment shall have positive thickness controls to minimize the need for additional manipulation of the material. Dumping from vehicles that require re-handling shall not be permitted. Hauling over the uncompacted base course shall not be permitted.

The material shall meet gradation and moisture requirements prior to compaction. The layer shall be constructed in lifts as established in the control strip, but not less than 4 inches nor more than 12 inches of compacted thickness.

When more than one lift is required to establish the layer thickness shown on the plans, the construction procedure described here shall apply to each lift. No lift shall be covered by subsequent lifts until tests verify that compaction requirements have been met. The Contractor shall rework, re-compact and retest any material placed which does not meet the specifications.

211-3.4 Compaction. Immediately upon completion of the spreading operations, compact each layer of the base course, as specified, with approved compaction equipment. The number, type, and weight of rollers shall be sufficient to compact the material to the required density within the same day that the aggregate is placed on the subgrade. The field density of each compacted lift of material shall be at least **100%** of the maximum density of laboratory specimens prepared from samples of the subbase material delivered to the

jobsite. The moisture content of the material during placing operations shall be within ±2 percentage points of the optimum moisture content as determined by ASTM D698 for parking lot pavements in Phase 1 and ASTM D1557 for all other pavement areas. Maximum density refers to maximum dry density at optimum moisture content unless otherwise specified. When the material has greater than 30 percent retained on the ¾ inch sieve, follow the methods in ASTM D698 **or** ASTM D1557 **or** procedures in AASHTO T180 Annex for correction of maximum dry density and optimum moisture for oversized particles.

211-3.5 Finishing. After the watering and rolling of the base course, the entire surface shall be scarified to a depth of at least 3 inches and shaped to the exact crown and cross-section with a blade grader. The scarified material shall be rewetted and thoroughly rolled. Rolling shall continue until the base is bonded and compacted to a dense, unyielding mass, true to grade and cross-section. Scarifying and rolling of the surface of the base shall follow the initial rolling of the lime rock by not more than four (4) days. When the lime rock base is constructed in two layers, the scarifying of the surface shall be to a depth of 2 inches.

If cracks or checks appear in the base before the surface course is laid, the Contractor shall rescarifying, reshaping, watering, add lime rock where necessary, and recompact. If the underlying material becomes mixed with the base course material, the Contractor shall, without additional compensation, remove, reshape, and recompact the mixture.

211-3.6 Weather limitations. Material shall not be placed unless the ambient air temperature is at least 40°F and rising. Work on base course shall not be conducted when the subgrade or subbase is wet or frozen or the base material contains frozen material.

211-3.7 Maintenance. The base course shall be maintained in a condition that will meet all specification requirements until the work is accepted by the RPR. When material has been exposed to excessive rain, snow, or freeze-thaw conditions, prior to placement of additional material, the Contractor shall verify that materials still meet all specification requirements. Equipment may be routed over completed sections of base course, provided that no damage results and the equipment is routed over the full width of the completed base course. Any damage resulting to the base course from routing equipment over the base course shall be repaired by the Contractor at the Contractor's expense.

211-3.8 Surface tolerance. After the course has been compacted, the surface shall be tested for smoothness and accuracy of grade and crown. Any portion lacking the required smoothness or failing in accuracy of grade or crown shall be scarified to a depth of at least 3 inches, reshaped and recompacted to grade. until the required smoothness and accuracy are obtained and approved by the RPR. Any deviation in surface tolerances shall be corrected by the Contractor at the Contractor's expense. The smoothness and accuracy requirements specified here apply only to the top layer when base course is constructed in more than one layer.

a. Smoothness. The finished surface shall not vary more than 3/8-inch when tested with a 12-foot straightedge applied parallel with and at right angles to the centerline. The straightedge shall be moved continuously at half the length of the 12-foot straightedge for the full length of each line on a 50-foot grid.

b. Grade. The grade and crown shall be measured on a 50-foot grid and shall be within +0 and -1/2 inch of the specified grade.

211-3.9 Acceptance sampling and testing. Lime rock base course shall be accepted for density on an area basis. Two tests shall be made for density and thickness for each **1200 square yds**. Sampling locations will be determined on a random basis per ASTM D3665.

a. Density. The **Contractor's laboratory shall perform all quality control density tests in the RPR's presence and provide the test results upon completion to the RPR for acceptance.** The Owner

may retain the services of an independent quality assurance (QA) testing firm to perform additional QA testing for acceptance determination.

Each area shall be accepted for density when the field density is at least **100%** of the maximum density of laboratory specimens compacted and tested per ASTM D698 for all parking lot pavement in Phase 1 and ASTM D1557 for all other pavement areas. The in-place field density shall be determined per **ASTM D1556 or ASTM D6938 using Procedure A, the direct transmission method, and ASTM D6938 shall be used to determine the moisture content of the material. The machine shall be calibrated in accordance with ASTM D6938.** Whichever method is selected, the same method will be used throughout the project. If the specified density is not attained, the entire area shall be reworked and/or recompacted and two additional random tests made. This procedure shall be followed until the specified density is reached. Maximum density refers to maximum dry density at optimum moisture content unless otherwise specified.

b. Thickness. The thickness of the base course shall be within +0 and -1/2 inch of the specified thickness as determined by **survey on a 25-foot by 25-foot survey grid performed before and after placement of the base course.** Where the thickness is deficient by more than 1/2-inch, the Contractor shall correct such areas at no additional cost by scarifying to a depth of at least 3 inches, adding new material of proper gradation, and the material shall be blended and recompacted to grade. The Contractor shall replace, at his expense, base material where depth tests have been taken.

METHOD OF MEASUREMENT

211-4.1 The quantity of lime rock base course shall be the number of square yards of base material placed, bonded, and accepted in the completed base course. The quantity of base course material shall be measured in final position **by means of average end areas on the complete work computed from elevations to the nearest 0.01 foot .** On individual depth measurements, thicknesses more than 1/2 inch in excess of that shown on the plans shall be considered as the specified thickness plus 1/2 inch in computing the yardage for payment.

BASIS OF PAYMENT

211-5.1 Payment shall be made at the contract unit price per square yards for lime rock base course. This price shall be full compensation for furnishing all materials and for all preparation, hauling, and placing of these materials, and for all labor, equipment, tools, and incidentals necessary to complete the item.

The cost of removing cracks and checks including the labor, and the additional lime rock necessary for crack elimination, will not be paid for separately but shall be included in the contract price per square yard for lime rock base course.

Payment will be made under:

Item P-211	Optional Base Course - per square yard

REFERENCES

The publications listed below form a part of this specification to the extent referenced. The publications are referred to within the text by the basic designation only.

ASTM International (ASTM)

ASTM C136	Standard Test Method for Sieve or Screen Analysis of Fine and Coarse Aggregates
ASTM D75	Standard Practice for Sampling Aggregates
ASTM D698	Standard Test Methods for Laboratory Compaction Characteristics of Soil Using Standard Effort (12,400 ft-lbf/ft^3 (600 kN-m/m^3))
ASTM D1556	Standard Test Method for Density and Unit Weight of Soil in Place by the Sand-Cone Method
ASTM D1557	Standard Test Methods for Laboratory Compaction Characteristics of Soil Using Modified Effort (56,000 ft-lbf/ft^3 (2700 kN-m/m^3))
ASTM D3665	Standard Practice for Random Sampling of Construction Materials
ASTM D4318	Standard Test Methods for Liquid Limit, Plastic Limit, and Plasticity Index of Soils
ASTM D4491	Standard Test Methods for Water Permeability of Geotextiles by Permittivity
ASTM D4751	Standard Test Methods for Determining Apparent Opening Size of a Geotextile

American Association of State Highway and Transportation Officials (AASHTO)

M288	Standard Specification for Geosynthetic Specification for Highway Applications

END OF ITEM P-211

Item P-304

Cement-Treated Aggregate Base Course (CTB)

DESCRIPTION

304-1.1 This item shall consist of a cement-treated base (CTB) course composed of mineral aggregate and cement, uniformly blended and mixed with water. The mixed material shall be spread and shaped with a mechanical spreader, and compacted with rollers in accordance with these specifications and in conformance to the lines, grades, dimensions, and cross-sections shown on the plans.

MATERIALS

304-2.1 Aggregate. The aggregate shall be select granular materials, comprised of crushed or uncrushed gravel and/or stone, or recycled cement concrete. The material shall be free of roots, sod, and weeds. The crushed or uncrushed aggregate shall consist of hard, durable particles meeting the requirements in the table below.

Cement Treated Aggregate Base Material Requirements

Material Test	Requirement	Standard
Coarse Aggregate Portion (retained on the No. 4 (4.75 mm) sieve)		
Resistance to Degradation	Loss: 40% maximum	ASTM C131
Soundness of Aggregates by Use of Sodium Sulfate **or** Magnesium Sulfate	Loss after 5 cycles: 10% maximum using Sodium sulfate - or - 15% maximum using magnesium sulfate	ASTM C88
Flat Particles, Elongated Particles, or Flat and Elongated Particles[1]	10% maximum, by weight, for fraction retained on the ½ inch sieve and 10% maximum, by weight, for the fraction passing the 1/2-inch sieve	ASTM D4791
Clay lumps and friable particles	Less than or equal to 3 percent	ASTM C142
Fine Aggregate Portion (Passing the No. 40 sieve)		
Liquid limit	Less than or equal to 25	ASTM D4318
Plasticity Index	Not more than 6	ASTM D4318

[1] A flat particle is one having a ratio of width to thickness greater than three (3); an elongated particle is one having a ratio of length to width greater than three (3).

304-2.2 Gradation Requirements. The aggregate shall conform to the gradation(s) shown in the table below per ASTM C136, A dense, well-graded aggregate blend that meets the requirements of the table shall be selected by the Contractor and used in the final mix design. The final aggregate blend shall be well graded from coarse to fine within the limits designated in the table and shall not vary from the low limit on one sieve to the high limit on adjacent sieves, or vice versa.

Aggregate Gradation for CTB Material

Sieve Size	Design Range Percentage by Weight Passing	Contractor's Final Gradation	Job Control Grading Band Tolerances for Contractor's Final Gradation2 Percent
2 inch	100		±0
1 inch	90-100		±5
No. 4	45-95		±8
No. 10	37-80		±8
No. 40	15-50		±5
No. 200	0–15		±3

For Contractor quality control, sample the aggregate stockpile in accordance with ASTM D75 and perform gradation tests in accordance with ASTM C136 a minimum of **[** once per week **]** during production of CTB.

304-2.3 Sampling and testing.

a. Aggregate base materials. The Contractor shall take samples of the aggregate base stockpile in accordance with ASTM D75 to verify initial aggregate base requirements and gradation. Material shall meet the requirements in paragraphs 304-2.1 and 304-2.2. This sampling and testing will be the basis for approval of the aggregate base quality requirements.

304-2.4 Cement. Cement shall conform to the requirements of ASTM **C150 Type I**.

304-2.5 Cementitious additives. Pozzolanic and slag cement may be added to the CTB mix. If used, each material must meet the following requirements:

a. Pozzolan. Pozzolanic materials must meet the requirements of ASTM C618, Class F, or N with the exception of loss of ignition, where the maximum shall be less than 6%. **The supplementary optional physical requirements of Table 3 contained in ASTM C618 shall apply.b. Slag cement (ground granulated blast furnace (GGBF) slag).** Slag shall conform to ASTM C989, Grade 100, or 120.

304-2.6 Water. Water used in mixing or curing shall be from potable water sources. Other sources shall be tested in accordance with ASTM C1602 prior to use.

304-2.7 Curing materials. Curing material shall be **a white-pigmented, liquid membrane-forming compound conforming to ASTM C309, Type 2, Class A or Class B (wax-based) for curing CTB placed under PCC pavements or an emulsified asphalt conforming to ASTM D977 for curing CTB placed under asphalt pavement. 304-2.8 Sand blotter. Sand shall be applied, when required, to prevent tracking of the emulsion curing materials. The sand material shall be clean, dry, and non-plastic.**

COMPOSITION OF MIXTURE

304-3.1 General. The CTB material shall be composed of a mixture of aggregate, cementitious material, and water. Fly ash or slag cement may be used as a partial replacement for cement.

304-3.2 Mix design. The mix design shall use a cement content that, when tested in the laboratory per ASTM D1633, produces a 7-day compressive strength between 300 pounds per square inch minimum and

600 pounds per square inch maximum. Avoid higher strengths due to potential to cause shrinkage and reflective cracks.

The mix design shall include a complete list of materials, including type, brand, source, and amount of cement, fine aggregate, coarse aggregate, water, and cementitious additives.

Should a change be made in aggregate sources or type of cement, or if cementitious additives are added or deleted from the mix, production of the CTB mix shall be stopped and a new mix design shall be submitted.

304-3.3 Submittals. At least 30 days prior to the placement of the CTB, the Contractor shall submit certified test reports to the Resident Project Representative (RPR) for those materials proposed for use during construction, as well as the mix design information for the CTB material. Tests older than six (6) months shall not be used. The certification shall show the ASTM or AASHTO specifications or tests for the material, the name of the company performing the tests, the date of the tests, the test results, and a statement that the material did or did not comply with the applicable specifications. The submittal package shall include the following:

a. Source(s) of materials, including aggregate, cement, cementitious additives, curing, and bond-breaking materials.

b. Physical properties of the aggregates, cement, cementitious additives, curing, and bond-breaking materials.

c. Mix design:

- Mix identification number
- Aggregate gradation
- Cement content
- Water content
- Cementitious materials content
- Compaction and strength results
- Laboratory compaction characteristics (maximum dry density and optimum moisture content)
- Compressive strength at seven (7) days

No CTB material shall be placed until the submittal is accepted in writing by the RPR.

During production, the Contractor shall submit batch tickets for each delivered load.

EQUIPMENT

304-4.1 Mixing. The mixer shall be a batch or continuous-flow type stationary mixer that produces a well-blended, uniform mixture of aggregate, cement, water, and pozzolan. The mixer shall be equipped with calibrated metering and feeding devices that introduce the aggregate, cement, water, and cementitious additives (if used) into the mixer in the specified quantities.

The RPR shall have free access to the plant at all times for inspection of the plant's equipment and operation and for sampling the CTB mixture.

304-4.2 Hauling. The CTB material shall be transported from the plant to the job site in trucks or other hauling equipment having beds that are smooth, clean, and tight. Truck bed covers shall be provided and used to protect the CTB from weather. CTB material that becomes wet during transport shall be rejected.

304-4.3 Placing. CTB material shall be placed with a mechanical spreader capable of receiving, spreading, and shaping the mixture without segregation into a uniform layer or lift. The equipment shall be equipped with a strike-off plate and end gates capable of being adjusted to the layer thickness and width.

304-4.4 Compaction. The number, type, and weight of rollers and/or compactors shall be sufficient to compact the mixture to the required density.

CONSTRUCTION METHODS

304-5.1 Control Strip. The first half-day of construction shall be considered the control strip. The Contractor shall demonstrate, in the presence of the RPR, that the materials, equipment, and construction processes meet the requirements of the specification. Control strips that do not meet specification requirements shall be removed and replaced at the Contractor's expense. Full operations shall not continue until the control strip has been accepted by the RPR. Upon acceptance of the control strip by the RPR, the Contractor shall use the same equipment, materials, and construction methods for the remainder of construction, unless adjustments made by the Contractor are approved in advance by the RPR.

304-5.2 Weather limitations. The CTB shall not be placed on frozen surfaces or when weather conditions will detrimentally affect quality of the finished course. Apply cement when the ambient temperature is a minimum of 40°F and rising and aggregate are not frozen or contain frost. If ambient temperature falls below 40°F, protect completed CTB areas against freezing.

The Contractor should stop operations prior to and during rain allowing time to cover and protect any freshly placed material. Areas damaged by rain shall be replaced at the Contractor's expense.

304-5.3 Maintenance. Completed portions of the cement-stabilized area may be opened to local traffic provided the curing process is not impaired and to other traffic after the curing period has elapsed, provided that the cement-stabilized course has hardened sufficiently to prevent surface marring or distortion by equipment or traffic. Protect finished portions of cement stabilized base from traffic of equipment used in constructing adjoining sections in a manner to prevent marring or damaging completed work. The CTB shall be protected from freezing until covered.

304-5.4 Preparation of underlying course. The underlying course shall be checked by the RPR before placing and spreading operations are started. Prior to placing the material, the final grade should be firm, moist and free of frost. Use of chemicals to eliminate frost will not be permitted. The underlying course shall be wetted in advance of placing the CTB layer.

304-5.5 Grade control. Grade control between the edges of the CTB shall be accomplished at intervals of **50 feet** on the longitudinal grade and at **25 feet** on the transverse grade.

304-5.6 Placing. The CTB mixture shall be deposited on the moistened subgrade or subbase and spread into a uniform layer of specified width and thickness that, when compacted and trimmed, conforms to the required line, grade, and cross-section. The longitudinal joints shall be located so there is **no offset when under a PCC surface layer or a 2 foot minimum offset when under an asphalt surface layer** from planned joints in any overlying layer. Placement of the material shall begin along the centerline of the pavement on a crowned section or on the highest elevation contour of a pavement with variable cross slope.

The Contractor shall install the CTB layer in single compacted layer no greater than **6 inches** thick.

304-5.7 Compaction. All compaction operations shall be completed within 2 hours from the start of mixing. The field density of the compacted mixture shall be at least **98%** of the maximum density in accordance with paragraph 304-6.1a. At the start of compaction, the moisture content shall be within ±2 percentage points of the specified optimum moisture. Maximum density refers to maximum dry density at optimum moisture content unless otherwise specified.

304-5.8 Finishing. After compaction, shape the surface of the CTB layer to the specified lines, grades, and cross-section. During the finishing process, the surface shall be kept moist by means of fog-type sprayers. Compaction and finishing shall produce a smooth, dense surface, free of ruts, cracks, ridges, and loose material.

304-5.9 Construction limitations. All placement, compaction, and finishing operations shall be completed within two (2) hours from the start of mixing. Material not completed within the 2-hour time limit shall be removed and replaced at the Contractor's expense.

At the end of each day's construction and/or when operations are interrupted for more than 30 minutes, a straight transverse construction joint shall be formed by a header or by cutting back into the compacted material to form a true vertical face.

Completed portions may be opened to light traffic, if approved by the RPR, and provided the curing is not impaired.

304-5.10 Curing. The compacted and finished CTB shall be cured with the approved curing agents as soon as possible, but in no case later than two (2) hours after completion of the finishing operations. Curing material(s) shall meet the requirements in paragraph 304-2.7. The layer shall be kept moist using a moisture-retaining cover or a light application of water until the curing material is applied.

For CTB placed under asphalt pavement, the entire surface of the CTB layer shall be uniformly sprayed with an asphalt emulsion at a rate of between 0.15 and 0.30 gallons per square yard; the exact temperature and rate of application being that required to achieve complete and uniform coverage without runoff. Apply sand at **[___]** pounds per square yard to treated surfaces requiring protection from traffic.

For CTB placed under PCC pavement, the surface of the CTB layer shall be uniformly sprayed with a liquid membrane-forming curing compound at the rate of one gallon to not more than 100 square feet to obtain a uniform cover over the surface. Hand spraying of odd widths or shapes and CTB surfaces exposed by the removal of forms is permitted.

The curing seal shall be maintained and protected until the pavement is placed. If the surface of the finished CTB and/or the curing seal becomes damaged, additional curing material shall be applied at the time it is damaged or when the damage is first observed.

304-5.11 Surface tolerance. The Contractor shall perform smoothness and grade checks in the presence of the RPR. Any area not meeting smoothness and grade shall be corrected by the Contractor at the Contractor's expense.

a. Smoothness. The finished surface shall not vary more than ±3/8-inch when tested with a 12-foot straightedge applied parallel with and at right angles to the centerline, and. moved continuously forward at half the length of the 12-foot straightedge for the full length of each line on a **50-foot** grid.

b. Grade. The grade shall be measured on a **50-foot** grid and shall be within +/-0.05 feet of the specified grade.

304-5.12 Bond-breaker. Where placed under PCC pavement, the surface of the CTB shall be coated with a de-bonding material applied in a quantity sufficient to prevent bonding of the concrete pavement to the base course. The Contractor shall be responsible for selecting the de-bonding material and application rate. The de-bonding material shall be approved by the RPR.

MATERIAL ACCEPTANCE

304-6.1 Acceptance sampling and testing. Cement Treated Aggregate base course shall be accepted for density and thickness on an area basis. Two tests shall be made for density and thickness for each **1200**

square yards,but not less than four (4) tests per day of production. Sampling locations will be determined on a random basis per ASTM D3665.

a. Density testing. CTB samples representing the material placed shall be taken to establish density and moisture requirements in accordance with ASTM D558. Additional CTB samples will be taken **as necessary** to verify density and moisture requirements. The **Contractor's laboratory shall perform all quality control density tests in the RPR's presence and provide the test results upon completion to the RPR for acceptance**. The Owner may retain the services of an independent quality assurance (QA) testing firm to perform additional QA testing for acceptance determination.

Each area shall be accepted for density when the field density is at least **[98%]** of the maximum density of laboratory specimens. The in-place field density shall be determined in accordance with **ASTM D1556 or ASTM D6938, Procedure A, direct transmission method** Whichever method is selected, the same method shall be used throughout the project. The in-place moisture content shall be determined in accordance with ASTM D2216**.** Perform in-place density test immediately after completion of compaction to determine degree of compaction. If the material fails to meet the density requirements, compaction shall continue or the material shall be removed and replaced at the Contractor's expense. Maximum density refers to maximum dry density at optimum moisture content unless otherwise specified.

b. Thickness.

The thickness of the CTB shall be determined by survey on a 25-foot by 25-foot survey grid performed before and after placement of the base course.

When the thickness measurement is deficient by more than 1/2 inch (12 mm), the area represented by the tests shall be removed and replaced at the Contractor's expense.

METHOD OF MEASUREMENT

304-7.1 Cement-treated base course. The quantity of cement-treated base course will be determined by measurement of the number of square yards of CTB actually constructed and accepted by the RPR as complying with the plans and specifications.

BASIS OF PAYMENT

304-8.1 Cement-treated base course. Payment shall be made at the contract unit price per square yard for cement-treated base course. This price shall be full compensation for furnishing all materials, including cement; for all preparation, manipulation, placing, and curing of these materials; and for all labor, equipment, tools, and incidentals necessary to complete the item.

Item P-304-1	Optional Stabilized Base Course for PCC Pavement – per square yard
Item P-304-2	Optional Stabilized Base Course for Asphalt Pavement – per square yard

REFERENCES

The publications listed below form a part of this specification to the extent referenced. The publications are referred to within the text by the basic designation only.

ASTM International (ASTM)

ASTM C88	Standard Test Method for Soundness of Aggregates by Use of Sodium Sulfate or Magnesium Sulfate

ASTM C150	Standard Specification for Portland Cement
ASTM C131	Standard Test Method for Resistance to Degradation of Small-Size Coarse Aggregate by Abrasion and Impact in the Los Angeles Machine
ASTM C136	Standard Test Method for Sieve or Screen Analysis of Fine and Coarse Aggregate
ASTM C174	Standard Test Method for Measuring Thickness of Concrete Elements Using Drilled Concrete Cores
ASTM C309	Standard Specification for Liquid Membrane-Forming Compounds for Curing Concrete
ASTM C595	Standard Specification for Blended Hydraulic Cements
ASTM C618	Standard Specification for Coal Fly Ash and Raw or Calcined Natural Pozzolan for Use in Concrete
ASTM C989	Standard Specification for Slag Cement for Use in Concrete and Mortars
ASTM C1602	Standard Specification for Mixing Water Used in the Production of Hydraulic Cement Concrete
ASTM D75	Standard Practice for Sampling Aggregates
ASTM D558	Standard Test Methods for Moisture-Density (Unit Weight) Relations of Soil-Cement Mixtures
ASTM D559	Standard Test Methods for Wetting and Drying Compacted Soil-Cement Mixtures
ASTM D560	Standard Test Methods for Freezing and Thawing Compacted Soil-Cement Mixtures
ASTM D977	Standard Specification for Emulsified Asphalt
ASTM D1556	Standard Test Method for Density and Unit Weight of Soil in Place by the Sand-Cone Method
ASTM D1633	Standard Test Methods for Compressive Strength of Molded Soil-Cement Cylinders
ASTM D2397	Standard Specification for Cationic Emulsified Asphalt
ASTM D3665	Standard Practice for Random Sampling of Construction Materials
ASTM D3666	Standard Specification for Minimum Requirements for Agencies Testing and Inspecting Road and Paving Materials
ASTM D4318	Standard Test Methods for Liquid Limit, Plastic Limit, and Plasticity Index of Soils
ASTM D6938	Standard Test Method for In-Place Density and Water Content of Soil and Soil-Aggregate by Nuclear Methods (Shallow Depth)

END OF ITEM P-304

Item P-306

Lean Concrete Base Course

DESCRIPTION

306-1.1 This item shall consist of a lean concrete subbase material that is composed of aggregate and cement uniformly blended together and mixed with water. The mixture may also include approved cementitious additives, in the form of fly ash or slag, and chemical admixtures. The mixed material shall be spread, shaped, and consolidated using concrete paving equipment in accordance with these specifications and in conformity to the lines, grades, dimensions, and typical cross-sections shown on the plans.

MATERIALS

306-2.1 Aggregate. The coarse aggregate fraction shall be crushed stone, crushed or uncrushed gravel, crushed and adequately seasoned, air-cooled, iron blast furnace slag, crushed recycled concrete, or a combination thereof. The fine aggregate fraction may be part of the natural aggregate blend as obtained from the borrow source or it may be natural sand that is added at the time of mixing. The aggregate shall meet the gradation and material requirements in the tables below.

Aggregate Material Requirements

Material Test	Requirement	Standard
Coarse Aggregate Portion (retained on the No. 4 sieve)		
Resistance to Degradation	Loss: 40% maximum	ASTM C131
Soundness of Aggregates by Use of Sodium Sulfate **or** Magnesium Sulfate	Loss after 5 cycles: 10% maximum using Sodium sulfate - or - 15% maximum using magnesium sulfate	ASTM C88
Flat Particles, Elongated Particles, or Flat and Elongated Particles[1]	10% maximum, by weight, for fraction retained on the ½ inch sieve and 10% maximum, by weight, for the fraction passing the 1/2-inch sieve	ASTM D4791
Clay lumps and friable particles	Less than or equal to 3 percent	ASTM C142
Fine Aggregate Portion (passing the No. 40 sieve)		
Clay lumps and friable particles	Less than or equal to 3 percent	ASTM C142
Soundness of Aggregates by Use of Sodium Sulfate **or** Magnesium Sulfate	Loss after 5 cycles: 10% maximum using Sodium sulfate - or - 15% maximum using magnesium sulfate	ASTM C88

[1] A flat particle is one having a ratio of width to thickness greater than five (5); an elongated particle is one having a ratio of length to width greater than five (5).

Aggregate Gradation for Lean Concrete

Sieve Size (square openings)	Percentage by Weight Passing Sieves
	Gradation [A]
1-1/2 inch	100
1 inch	70-95
3/4 inch	55-85
No. 4	30-60
No. 40	10-30
No. 200	0-15

306-2.2 Sampling and testing.

a. Aggregate base materials. The Contractor shall take samples of the aggregate base stockpile in accordance with ASTM D75 to verify initial aggregate base requirements and gradation. Material shall meet the requirements in paragraphs 306-2.1 and 306-2.2. This sampling and testing will be the basis for approval of the aggregate base quality requirements.

306-2.3 Cement. Cement shall conform to the requirements of ASTM C150 Type I or II.

306-2.4 Cementitious additives. Pozzolanic and slag cement may be added to the lean concrete mix. If used, each material must meet the following requirements:

a. Pozzolan. Pozzolanic materials must meet the requirements of ASTM C618, Class F, or N with the exception of loss of ignition, where the maximum shall be less than 6%. **The supplementary optional physical requirements of Table 3 contained in ASTM C618 shall apply.**

b. Slag cement (ground granulated blast furnace (GGBF) slag). Slag shall conform to ASTM C989, Grade 100 or 120.

306-2.5 Chemical admixtures. The Contractor shall submit certificates indicating that the material to be furnished meets all the requirements listed below. In addition, the RPR may require the Contractor to submit complete test data showing that the material to be furnished meets all the requirements of the cited specification.

a. Air-entraining admixtures. Air-entraining admixtures shall meet the requirements of ASTM C260.

b. Water-reducing admixtures. Water-reducing, set-controlling admixtures shall meet the requirements of ASTM C494, Type A, D, E, F, or G. Water-reducing admixtures shall be added at the mixer separately from air-entraining admixtures in accordance with the manufacturer's printed instructions. The air entrainment agent and the water-reducing admixture shall be compatible.

c. Retarding admixtures. Retarding admixtures shall meet the requirements of ASTM C494, Type B or D.

d. Accelerating admixtures. Accelerating admixtures shall meet the requirements of ASTM C494, Type C.

306-2.6 Water. Water used in mixing or curing shall be from potable water sources. Other sources shall be tested in accordance with ASTM C1602 prior to use.

306-2.7 Curing materials. For curing lean concrete, use white-pigmented, liquid membrane-forming compound conforming to ASTM C309, Type 2, Class B, or clear or translucent Type 1-D, Class B with white fugitive dye.

306-2.8 Bond Breaker. When placed under a PCC surface course a bond breaker meeting one of the following requirements shall be used:

a) **Choke stone (ASTM C33 Number 89 stone).**
b) **Fabric meeting the requirements of AASHTO M 288 Class I fabric with elongation less than 50% at the specified strengths. A certificate of compliance (COC) shall be provided by the fabric manufacturer that the material may be used as a bond breaker.**
c) **Liquid membrane forming compound shall be in accordance with paragraph 306-2.7.**

A bond breaker is not required when place under asphalt pavement

COMPOSITION OF MIXTURE

306-3.1 Mix design. The lean concrete mix design shall be based on trial batch results conducted in the laboratory. The lean concrete shall be designed to meet the criteria in this section.

Compressive strength shall not be less than 500 pounds per square inch nor greater than 800 pounds per square inch at seven (7) days. Compressive strengths shall be taken as the average of two compressive strength test results. All compressive strength specimens shall be prepared and tested in accordance with ASTM C192 and ASTM C39, respectively.

The percentage of air entrainment shall be **6%**, ±1/2%. Air content shall be determined by testing in accordance with ASTM C231 for gravel and stone coarse aggregate and ASTM C173 for slag and other highly porous coarse aggregate.

If there is a change in aggregate sources, type of cement used, or pozzolanic materials, a new mix design must be submitted

306-3.2 Submittals. At least **30 days** prior to the placement of the lean concrete, the Contractor shall submit certified test reports to the RPR for those materials proposed for use during construction, as well as the mix design information for the lean concrete material. The certification shall identify the specifications and test standard, the name of the testing laboratory, the date of the tests, and a statement that the materials comply with the applicable specifications. Tests older than six (6) months shall not be used. The submittal package shall include the following:

a. Sources of materials, including aggregate, cement, admixtures, and curing and bond breaking materials.

b. Physical properties of the aggregates, cement, admixtures, curing and bond breaking materials.

c. Mix design:

- Mix identification number
- Weight of saturated surface-dry aggregates (fine and coarse)
- Combined aggregate gradation
- Cement factor
- Water content
- Water-cementitious material ratio (by weight)
- Volume of admixtures and yield for one cubic yard (cubic meter) of lean concrete
- Laboratory test results:
- Slump
- Unit weight

- Air content
- Compressive strength at 3, 7, and 28 days (average values)

Where applicable, the Contractor shall submit a jointing plan for transverse joints in the lean concrete layer for approval by the RPR.

During production, the Contractor shall submit batch tickets for each delivered load.

EQUIPMENT

306-4.1 All equipment necessary to mix, transport, place, compact, and finish the lean concrete material shall be furnished by the Contractor and is subject to inspection and approval by the RPR. The Contractor shall provide certification that all equipment conforms to the requirements of ASTM C94.

306-4.2 Forms. Straight side forms shall be made of steel and shall be furnished in sections not less than 10 feet in length. Forms shall have a depth equal to the pavement thickness at the edge. Flexible or curved forms of proper radius shall be used for curves of 100 feet radius or less. Forms shall be provided with adequate devices for secure settings so that when in place they will withstand, without visible spring or settlement, the impact and vibration of the consolidating and finishing equipment. Forms with battered top surfaces and bent, twisted or broken forms shall not be used. Built-up forms shall not be used, except as approved by the RPR. The forms shall contain provisions for locking the ends of abutting sections together tightly for secure setting. Wood forms may be used under special conditions, when accepted by the RPR.

306-4.3 Concrete pavers. A fixed form or slip-form concrete paver may be used to place lean concrete. The paver shall be fully energized, self-propelled and capable of spreading, consolidating, and finishing the lean concrete material, true to grade, tolerances, and cross-sections. The paver shall be of sufficient weight and power to construct the maximum specified concrete paving lane width, at adequate forward speed, without transverse, longitudinal or vertical instability or without displacement. Slip-form pavers shall be equipped with electronic or hydraulic horizontal and vertical control devises. Bridge deck pavers are approved as paver-finishing machines for lean concrete, provided they are capable of handling the amount of lean concrete required for the full-lane width specified, and capable of spreading, consolidating, and finishing the lean concrete material, true to grade, tolerances, and cross-sections.

306-4.4 Vibrators. For fixed-form construction, vibrators may be either the surface pan type or internal type with either immersed tube or multiple spuds for the full width of the slab. They may be attached to the spreader, the finishing machine, or mounted on a separate carriage. They shall not come in contact with the subgrade or forms.

For slip-form construction, the paver shall be accomplished by internal vibrators for the full width and depth of the pavement being placed. The number, spacing, frequency, and eccentric weights of vibrators shall be provided to achieve acceptable consolidation without segregation and finishing quality. Internal vibrators may be supplemented by vibrating screeds operating on the surface of the lean concrete. Vibrators and screeds shall automatically stop operation when forward motion ceases. An override switch shall be provided.

Hand held vibrators may be used in irregular areas.

306-4.5 Joint saws. The Contractor shall provide a sufficient number of saws with adequate power to cut contraction or construction joints to the required dimensions as shown on the plans. The Contractor shall provide at least one standby saw in good working order.

CONSTRUCTION METHODS

306-5.1 Control Strip. The first half-day of construction shall be considered the control strip. The Contractor shall demonstrate, in the presence of the RPR, that the materials, equipment, and construction processes meet the requirements of the specification. Control strips that do not meet specification requirements shall be removed and replaced at the Contractor's expense. Full operations shall not continue until the control strip has been accepted by the RPR. Upon acceptance of the control strip by the RPR, the Contractor shall use the same equipment, materials, and construction methods for the remainder of construction, unless adjustments made by the Contractor are approved in advance by the RPR.

306-5.2 Weather limitations. The Contractor shall follow the recommended practices in American Concrete Institute (ACI) 306R, Guide to Cold Weather Concreting**.** The temperature of the mixed lean concrete shall not be less than 50°F at the time of placement. The lean concrete shall not be placed when the ambient temperature is below 40°F or when conditions indicate that the temperature may fall below 35°F within 24 hours. The lean concrete shall not be placed on frozen underlying courses.

The Contractor shall follow the recommended practices in ACI 305R, Guide to Hot Weather Concreting. The lean concrete temperature from initial mixing through final cure shall not exceed 90°F. When the maximum daily air temperature exceeds 85°F, the forms and/or the underlying material shall be sprinkled with water before placing the lean concrete.

The Contractor should stop operations prior to and during rain allowing time to cover and protect any plastic lean concrete. Areas damaged by rain shall be refinished or replaced at the Contractor's expense.

306-5.3 Maintenance. The Contractor shall protect the lean concrete from environmental or mechanical damage. Traffic shall not be allowed on the pavement until test specimens made per ASTM C31 have attained a compressive strength of 500 psi when tested per ASTM C39. The Contractor shall maintain continuity of the applied curing method for the entire curing period.

306-5.4 Form setting. Form sections shall be tightly locked and shall be free from play or movement in any direction. The forms shall not deviate from true line by more than 1/4 inch at any joint. The top face of the form shall not vary from a true plane more than 1/8 inch in 10 feet, and the upstanding leg shall not vary more than 1/4 inch. Forms shall be cleaned and oiled prior to the placing of lean concrete.

306-5.5 Preparation of underlying course. The underlying course shall be checked and accepted by the RPR before placing operations begin. Prior to placing the material, the final grade should be firm, moist and free of frost. Use of chemicals to eliminate frost will not be permitted. The underlying course shall be wetted in advance of placing the lean concrete base course.

306-5.6 Grade control. Grade control shall be as necessary to construct the layer to the profile and cross-sections as shown on the plans.

306-5.7 Mixing. The batch plant site, layout, equipment, and provisions for transporting material shall assure a continuous supply of material to the work. Stockpiles shall be constructed in a manner that prevents segregation and intermixing of deleterious materials.

All lean concrete shall be mixed and delivered to the site per the requirements of ASTM C94. The mixing time should be adequate to produce lean concrete that is uniform in appearance, with all ingredients evenly distributed. Mixing time shall be measured from the time all materials are emptied into the drum (provided all the water is added before one-fourth the preset mixing time has elapsed) and continues until the time the discharge chute is opened to deliver the lean concrete.

If mixing in a batch plant, the mixing time shall not be less than 50 or greater than 90 seconds. If mixing in a truck mixer, the mixing time shall not be less than 70 or more than 125 truck-drum revolutions at a mixing speed of not less than six (6) or more than 18 truck-drum revolutions per minute.

The elapsed time from the addition of cementitious material to the mix until the lean concrete is deposited in place at the work site shall not exceed 45 minutes when the concrete is hauled in non-agitating trucks, or 90 minutes when it is hauled in truck mixers or truck agitators.

Re-tempering lean concrete will not be permitted, except when delivered in truck mixers. With truck mixers, additional water may be added to the batch materials if the addition of water is added within 45 minutes after the initial mixing operations and the water/cement ratio specified in the mix design is not exceeded.

306-5.8 Placing. The lean concrete material shall be placed continuously at a uniform rate on the underlying course minimizing segregation and handling of the mix. Rakes shall not be allowed for spreading the lean concrete.

306-5.9 Finishing. Shape the finished surface of the lean concrete base layer to the specified lines, grades, and cross-section. Hand finishing will not be permitted except in areas where the mechanical finisher cannot operate.

The surface of the lean concrete shall not be textured when placed under a PCC surface course. The surface of the lean concrete shall have a coarse texture when place under an asphalt surface course.]

306-5.10 Construction limitations. All placement and finishing operations shall be completed within two (2) hours from the start of mixing. Material not completed within the 2-hour time limit shall be removed and replaced at the Contractor's expense.

At the end of each day's construction and/or when operations are interrupted for more than 30 minutes, a straight transverse construction joint shall be formed by a header or by cutting back into the compacted material to form a true vertical face.

Completed portions may be opened to light traffic when it has achieved its **7-day strength** and the curing is not damaged.

306-5.11 Joints. Locate all longitudinal and transverse construction joints as shown on the plans. Longitudinal joints shall be within 6 inches of planned joints in the overlaying concrete pavement and transverse joints shall be within 3 inches the planned joints of the overlying concrete surface. Joints shall be sawn as soon as the base can support the saws without damage to the lean concrete base. Joints shall be constructed by sawing the hardened lean concrete to a depth of at least one-third the thickness of the lean concrete base, or 1/5th the depth of the lean concrete base when constructed using early entry saws.

306-5.12 Curing. Immediately after the finishing operations are complete and within two (2) hours of placement of the lean concrete, the entire surface and edges of the newly placed lean concrete shall be sprayed uniformly with **white pigmented, liquid membrane forming curing compound conforming to ASTM C309, Type 2, Class B or clear or translucent Type 1-D, Class B with white fugitive dye** in accordance with paragraph 306-2.7. The layer should be kept moist using a moisture-retaining cover or a light application of water until the curing material is applied. The curing compound shall not be applied during rainfall.

The curing material shall be applied at a maximum coverage of 200 square feet per gallon using pressurized mechanical sprayers. The spraying equipment shall be a fully atomizing type equipped with a tank agitator. At the time of use, the curing compound in the tank shall be thoroughly and uniformly mixed with the pigment. During application, the curing compound shall be continuously stirred by mechanical means. Edges of the lean concrete layer shall be sprayed with curing compound immediately following placement with slip-form pavers or when side-forms are removed. Hand spraying of odd widths or shapes and lean concrete surfaces exposed by the removal of forms is permitted.

The lean concrete temperature during curing shall be in accordance with paragraph 306-5.2.

If the curing material becomes damaged from any cause, including sawing operations, within the required 7-day curing period or until the overlying course is constructed, the Contractor shall immediately repair the damaged areas by application of additional curing compound or other means approved by the RPR.

306-5.13 Surface tolerance. The Contractor shall perform smoothness and grade checks daily. Any area not meeting smoothness and grade shall be corrected by the Contractor at the Contractor's expense. The Contractor shall provide smoothness and grade data to the RPR on a daily basis.

a. Smoothness. The finished surface shall not vary more than ±3/8-inch when tested with a 12-foot straightedge applied parallel with and at right angles to the centerline, and. moved continuously forward at half the length of the 12-foot straightedge for the full length of each line on a **[** 50-foot **]** grid. The Contractor shall correct any high spots more than 3/8 inch in 12-foot with a grinding machine or remove and replace the material at the Contractor's expense. Any areas that have been ground shall have curing compound reapplied.

b. Grade. The grade shall be measured on a **50-foot** grid and shall be within +/-0.05 feet of the specified grade. When the surface is more than 1/2 inch above the grade shown in the plans, the surface shall be corrected at the Contractor's expense to an elevation that falls within a tolerance of 1/4 inch.

306-5.14 Bond-breaker. When placed under PCC Pavement one of following bond breakers shall be used:

a) **Choke stone per paragraph 306-2.8 shall be placed on the surface of the lean concrete to prevent bonding. The choke stone shall be placed in a layer approximately 1/4-inch thick.**
b) **Fabric per paragraph 306-2.8 shall be placed on the surface of the lean concrete to prevent bonding. The fabric shall be placed with a minimum 1 foot of overlap where adjoining sections of fabric come together.**
c) **Liquid membrane forming compound per paragraph 306-2.8 shall be placed on the surface of the lean concrete to prevent bonding. The liquid membrane forming compound when used as a bond breaker shall be applied at least eight (8) hours and not more than 24 hours before placement of the concrete pavement. The curing material shall be applied at a maximum coverage rate of 200 square feet per gallon using pressurized mechanical sprayers.**

MATERIAL ACCEPTANCE

306-6.1 Sampling and testing. Acceptance sampling and testing to determine conformance with the requirements specified in this section will be performed by the RPR for each **1200 square yards]**. Sampling locations will be determined by the RPR on a random basis per ASTM D3665.

a. Compressive Strength. One sample of freshly delivered lean concrete will be taken for compressive strength for each **1200 square yards** in accordance with ASTM C172 and air content tests in accordance with ASTM C231. Two test cylinders will be made and cured from the sample per ASTM C31 and the 7-day compressive strength of each cylinder determined per ASTM C39. The compressive strength will be computed by averaging the two 7-day compressive strengths.

The Contractor shall provide for the initial curing of cylinders in accordance with ASTM C31 during the 24 hours after molding.

b. Thickness.

Thickness will be determined by survey on a 25-foot by 25-footgrid performed before and after placement of the base course.

306-6.2 Acceptance.

a. Strength. If the lean concrete fails to meet the minimum compressive strength requirements, the Contractor shall remove and replaced the material at the Contractor's expense.

b. Thickness. If the average thickness is not deficient by more than 1/2 inch from the plan thickness, full payment shall be made. When such measurement is deficient by more than 1/2 inch but less than one inch from the plan thickness, the area **represented by the test** shall be removed and replaced at the Contractor's expense or shall be permitted to remain in-place at an adjusted payment of 75% of the contract unit price.

METHOD OF MEASUREMENT

306-7.1 The quantity of lean concrete base course will be determined by the number of square yard of lean concrete actually constructed and accepted by the RPR as complying with the plans and specifications.

BASIS OF PAYMENT

306-8.1 The accepted quantities of lean concrete will be paid for at the contract unit price per square yard for lean concrete base. The price and payment shall be full compensation for furnishing and placing all materials, provided; however, for any pavement found deficient in thickness as specified in paragraph 306-6.2b, the reduced unit price shall be paid.

Item P-306	Lean Concrete Base Course - per square yard

REFERENCES

The publications listed below form a part of this specification to the extent referenced. The publications are referred to within the text by the basic designation only.

ASTM International (ASTM)

ASTM C31	Standard Practice for Making and Curing Concrete Test Specimens in the Field
ASTM C33	Standard Specification for Concrete Aggregates
ASTM C39	Standard Test Method for Compressive Strength of Cylindrical Concrete Specimens
ASTM C94	Standard Specification for Ready-Mixed Concrete
ASTM C136	Standard Test Method for Sieve or Screen Analysis of Fine and Coarse Aggregates
ASTM C150	Standard Specification for Portland Cement
ASTM C172	Standard Practice for Sampling Freshly Mixed Concrete
ASTM C173	Standard Test Method for Air Content of Freshly Mixed Concrete by the Volumetric Method
ASTM C174	Standard Test Method for Measuring Thickness of Concrete Elements Using Drilled Concrete Cores
ASTM C192	Standard Practice for Making and Curing Concrete Test Specimens in the Laboratory

ASTM C231	Standard Test Method for Air Content of Freshly Mixed Concrete by the Pressure Method
ASTM C260	Standard Specification for Air-Entraining Admixtures for Concrete
ASTM C1260	Standard Test Method for Potential Alkali Reactivity of Aggregates (Mortar-Bar Method)
ASTM C309	Standard Specification for Liquid Membrane-Forming Compounds for Curing Concrete
ASTM C494	Standard Specification for Chemical Admixtures for Concrete
ASTM C595	Standard Specification for Blended Hydraulic Cements
ASTM C618	Specification for Coal Fly Ash and Raw and Calcined Natural Pozzolans for Use in Concrete
ASTM C989	Standard Specification for Slag Cement for Use in Concrete and Mortars
ASTM C1567	Standard Test Method for Determining the Potential Alkali-Silica Reactivity of Combinations of Cementitious Materials and Aggregates (Accelerated Mortar-Bar Method)
ASTM C1602	Standard Specification for Mixing Water Used in the Production of Hydraulic Cement Concrete

American Association of State Highway and Transportation Officials (AASHTO)

AASHTO T136	Standard Method of Test for Freezing-and-Thawing Tests of Compacted Soil-Cement Mixtures
ASTM D3665	Standard Practice for Random Sampling of Construction Materials

American Concrete Institute (ACI)

ACI 305R	Guide to Hot Weather Concreting
ACI 306R	Guide to Cold Weather Concreting

END OF ITEM P-306

Item P-401

Asphalt Mix Pavement

DESCRIPTION

401-1.1 This item shall consist of pavement courses composed of mineral aggregate and asphalt binder mixed in a central mixing plant and placed on a prepared base or stabilized course in accordance with these specifications and shall conform to the lines, grades, thicknesses, and typical cross-sections shown on the plans. Each course shall be constructed to the depth, typical section, and elevation required by the plans and shall be rolled, finished, and approved before the placement of the next course.

MATERIALS

401-2.1 Aggregate. Aggregates shall consist of crushed stone, crushed gravel, crushed slag, screenings, natural sand, and mineral filler, as required. The aggregates should have no known history of detrimental pavement staining due to ferrous sulfides, such as pyrite. Coarse aggregate is the material retained on the No. 4 sieve. Fine aggregate is the material passing the No. 4 sieve.

a. Coarse aggregate. Coarse aggregate shall consist of sound, tough, durable particles, free from films of matter that would prevent thorough coating and bonding with the asphalt material and free from organic matter and other deleterious substances. Coarse aggregate material requirements are given in the table below.

Coarse Aggregate Material Requirements

Material Test	**Requirement**	**Standard**
Resistance to Degradation	Loss: 40% maximum	ASTM C131
Soundness of Aggregates by Use of Sodium Sulfate **or** Magnesium Sulfate	Loss after 5 cycles: 12% maximum using Sodium sulfate - or - 18% maximum using magnesium sulfate	ASTM C88
Clay lumps and friable particles	0.3% maximum	ASTM C142
Percentage of Fractured Particles	For pavements designed for aircraft gross weights of 60,000 pounds or more: Minimum 75% by weight of particles with at least two fractured faces and 85% with at least one fractured face[1]	ASTM D5821
Flat, Elongated, or Flat and Elongated Particles	8% maximum, by weight, of flat, elongated, or flat and elongated particles at 5:1 [2]	ASTM D4791
Bulk density of slag [3]	Weigh not less than 70 pounds per cubic foot	ASTM C29.

[1] The area of each face shall be equal to at least 75% of the smallest mid-sectional area of the piece. When two fractured faces are contiguous, the angle between the planes of fractures shall be at least 30 degrees to count as two fractured faces.

[2] A flat particle is one having a ratio of width to thickness greater than five (5); an elongated particle is one having a ratio of length to width greater than five (5).

[3] Only required if slag is specified.

b. Fine aggregate. Fine aggregate shall consist of clean, sound, tough, durable, angular shaped particles produced by crushing stone, slag, or gravel and shall be free from coatings of clay, silt, or other objectionable matter. Natural (non-manufactured) sand may be used to obtain the gradation of the fine aggregate blend or to improve the workability of the mix. Fine aggregate material requirements are listed in the table below.

Fine Aggregate Material Requirements

Material Test	**Requirement**	**Standard**
Liquid limit	25 maximum	ASTM D4318
Plasticity Index	4 maximum	ASTM D4318
Soundness of Aggregates by Use of Sodium Sulfate **or** Magnesium Sulfate	Loss after 5 cycles: 10% maximum using Sodium sulfate - or - 15% maximum using magnesium sulfate	ASTM C88
Clay lumps and friable particles	0.3% maximum	ASTM C142
Sand equivalent	**45 minimum**	ASTM D2419
Natural Sand	**0% to 15% maximum by weight of total aggregate**	ASTM D1073

c. Sampling. ASTM D75 shall be used in sampling coarse and fine aggregate.

401-2.2 Mineral filler. Mineral filler (baghouse fines) may be added in addition to material naturally present in the aggregate. Mineral filler shall meet the requirements of ASTM D242.

Mineral Filler Requirements

Material Test	**Requirement**	**Standard**
Plasticity Index	4 maximum	ASTM D4318

401-2.3 Asphalt binder. Asphalt binder shall conform to ASTM D6373 Performance Grade (PG) **67-22**.

[

Asphalt Binder PG Plus Test Requirements

Material Test	**Requirement**	**Standard**
Elastic Recovery	75% minimum	ASTM D6084

]

401-2.4 Anti-stripping agent. Any anti-stripping agent or additive (anti-strip) shall be heat stable and shall not change the asphalt binder grade beyond specifications. Anti-strip shall be an approved material of the Department of Transportation of the State in which the project is located.

COMPOSITION

401-3.1 Composition of mixture(s). The asphalt mix shall be composed of a mixture of aggregates, filler and anti-strip agent if required, and asphalt binder. The aggregate fractions shall be sized, handled in

separate size groups, and combined in such proportions that the resulting mixture meets the grading requirements of the job mix formula (JMF).

401-3.2 Job mix formula (JMF) laboratory. The laboratory used to develop the JMF shall possess a current certificate of accreditation, listing D3666 from a national accrediting authority and all test methods required for developing the JMF; and be listed on the accrediting authority's website. A copy of the laboratory's current accreditation and accredited test methods shall be submitted to the Resident Project Representative (RPR) prior to start of construction.

401-3.3 Job mix formula (JMF). No asphalt mixture shall be placed until an acceptable mix design has been submitted to the RPR for review and accepted in writing. The RPR's review shall not relieve the Contractor of the responsibility to select and proportion the materials to comply with this section.

When the project requires asphalt mixtures of differing aggregate gradations and/or binders, a separate JMF shall be submitted for each mix. Add anti-stripping agent to meet tensile strength requirements.

The JMF shall be prepared by an accredited laboratory that meets the requirements of paragraph 401-3.2. The asphalt mixture shall be designed using procedures contained in Asphalt Institute MS-2 Mix Design Manual, 7th Edition**Samples shall be prepared and compacted using the gyratory compactor in accordance with ASTM D6925.**

Should a change in sources of materials be made, a new JMF must be submitted to the RPR for review and accepted in writing before the new material is used. After the initial production JMF has been approved by the RPR and a new or modified JMF is required for whatever reason, the subsequent cost of the new or modified JMF, including a new control strip when required by the RPR, will be borne by the Contractor.

The RPR may request samples at any time for testing, prior to and during production, to verify the quality of the materials and to ensure conformance with the applicable specifications.

The JMF shall be submitted in writing by the Contractor at least **30** days prior to the start of paving operations. The JMF shall be developed within the same construction season using aggregates proposed for project use.

The JMF shall be dated, and stamped or sealed by the responsible professional Engineer of the laboratory and shall include the following items as a minimum:

- Manufacturer's Certificate of Analysis (COA) for the asphalt binder used in the JMF in accordance with paragraph 401-2.3. Certificate of asphalt performance grade is with modifier already added, if used and must indicate compliance with ASTM D6373. For plant modified asphalt binder, certified test report indicating grade certification of modified asphalt binder.
- Manufacturer's Certificate of Analysis (COA) for the anti-stripping agent if used in the JMF in accordance with paragraph 401-2.4.
- Certified material test reports for the course and fine aggregate and mineral filler in accordance with paragraphs 401-2.1.
- Percent passing each sieve size for individual gradation of each aggregate cold feed and/or hot bin; percent by weight of each cold feed and/or hot bin used; and the total combined gradation in the JMF.
- Specific Gravity and absorption of each coarse and fine aggregate.
- Percent natural sand.
- Percent fractured faces.
- Percent by weight of flat particles, elongated particles, and flat and elongated particles (and criteria).

- Percent of asphalt.
- Number of blows or gyrations
- Laboratory mixing and compaction temperatures.
- Supplier-recommended field mixing and compaction temperatures.
- Plot of the combined gradation on a 0.45 power gradation curve.
- Graphical plots of air voids, voids in the mineral aggregate (VMA), and unit weight versus asphalt content. To achieve minimum VMA during production, the mix design needs to account for material breakdown during production.
- Tensile Strength Ratio (TSR).
- Type and amount of Anti-strip agent when used.
- Asphalt Pavement Analyzer (APA) results.
- Date the JMF was developed. Mix designs that are not dated or which are from a prior construction season shall not be accepted.

Table 1. Asphalt Design Criteria

Test Property	**Value**	**Test Method**
Number of blows or gyrations	**75**	
Air voids (%)	3.5	ASTM D3203
Percent voids in mineral aggregate (VMA), minimum	See Table 2	ASTM D6995
Tensile Strength Ratio (TSR)[1]	not less than **80** at a saturation of 70-80%	ASTM D4867
Asphalt Pavement Analyzer (APA)[2]	Less than 10 mm @ 4000 passes	AASHTO T340 at 250 psi hose pressure at 64°C test temperature

[1] Test specimens for TSR shall be compacted at 7 ± 1.0 % air voids. In areas subject to freeze-thaw, use freeze-thaw conditioning in lieu of moisture conditioning per ASTM D4867.

[2] AASHTO T340 at 100 psi hose pressure at 64°C test temperature may be used in the interim. If this method is used the required Value shall be less than 5 mm @ 8000 passes

The mineral aggregate shall be of such size that the percentage composition by weight, as determined by laboratory sieves, will conform to the gradation or gradations specified in Table 2 when tested in accordance with ASTM C136 and ASTM C117.

The gradations in Table 2 represent the limits that shall determine the suitability of aggregate for use from the sources of supply; be well graded from coarse to fine and shall not vary from the low limit on one sieve to the high limit on the adjacent sieve, or vice versa.

Table 2. Aggregate - Asphalt Pavements

Sieve Size	**Percentage by Weight Passing Sieve**
1 inch	--
3/4 inch	100
1/2 inch	90-100
3/8 inch	72-88
No. 4	53-73
No. 8	38-60
No. 16	26-48
No. 30	18-38
No. 50	11-27
No. 100	6-18
No. 200	3-6
Minimum Voids in Mineral Aggregate (VMA)[1]	15.0
Asphalt Percent:	
Stone or gravel	**5.0-7.5**
Recommended Minimum Construction Lift Thickness	**2”**

[1]To achieve minimum VMA during production, the mix design needs to account for material breakdown during production.

The aggregate gradations shown are based on aggregates of uniform specific gravity. The percentages passing the various sieves shall be corrected when aggregates of varying specific gravities are used, as indicated in the Asphalt Institute MS-2 Mix Design Manual, 7th Edition.

401-3.4 Reclaimed asphalt pavement (RAP). RAP shall not be used.

401-3.5 Control Strip. Full production shall not begin until an acceptable control strip has been constructed and accepted in writing by the RPR**.** The Contractor shall prepare and place a quantity of asphalt according to the JMF. The underlying grade or pavement structure upon which the control strip is to be constructed shall be the same as the remainder of the course represented by the control strip.

The Contractor will not be allowed to place the control strip until the Contractor quality control program (CQCP), showing conformance with the requirements of paragraph 401-5.1, has been accepted, in writing, by the RPR.

The control strip will consist of at least 250 tons or 1/2 sublot, whichever is greater. The control strip shall be placed in two lanes of the same width and depth to be used in production with a longitudinal cold joint. The cold joint must be cut back in accordance with paragraph 401-4.14 using the same procedure that will be used during production. The cold joint for the control strip will be an exposed construction joint at least four (4) hours old or when the mat has cooled to less than 160°F. The equipment used in construction of the control strip shall be the same type, configuration and weight to be used on the project.

The control strip will be considered acceptable by the RPR if the gradation, asphalt content, and VMA are within the action limits specified in paragraph 401-5.5a; and Mat density, air voids, and joint density meet the requirements specified in paragraphs 401-6.2.

If the control strip is unacceptable, necessary adjustments to the JMF, plant operation, placing procedures, and/or rolling procedures shall be made and another control strip shall be placed. Unacceptable control strips shall be removed at the Contractor's expense.

Payment will only be made for an acceptable control strip in accordance with paragraph 401-8.1 using a lot pay factor equal to 100.

CONSTRUCTION METHODS

401-4.1 Weather limitations. The asphalt shall not be placed upon a wet surface or when the surface temperature of the underlying course is less than specified in Table 4. The temperature requirements may be waived by the RPR, if requested; however, all other requirements including compaction shall be met.

Table 4. Surface Temperature Limitations of Underlying Course

Mat Thickness	**Base Temperature (Minimum)**	
	°F	**°C**
3 inches or greater	40 [1]	4
Greater than 2 inches but less than 3 inches	45	7

401-4.2 Asphalt plant. Plants used for the preparation of asphalt shall conform to the requirements of American Association of State Highway and Transportation Officials (AASHTO) M156 including the following items.

a. Inspection of plant. The RPR, or RPR's authorized representative, shall have access, at all times, to all areas of the plant for checking adequacy of equipment; inspecting operation of the plant: verifying weights, proportions, and material properties; and checking the temperatures maintained in the preparation of the mixtures.

b. Storage bins and surge bins. The asphalt mixture stored in storage and/or surge bins shall meet the same requirements as asphalt mixture loaded directly into trucks. Asphalt mixture shall not be stored in storage and/or surge bins for a period greater than twelve (12) hours. If the RPR determines there is an excessive heat loss, segregation, or oxidation of the asphalt mixture due to temporary storage, temporary storage shall not be allowed.

401-4.3 Aggregate stockpile management. Aggregate stockpiles shall be constructed in a manner that prevents segregation and intermixing of deleterious materials. Aggregates from different sources shall be stockpiled, weighed and batched separately at the asphalt batch plant. Aggregates that have become segregated or mixed with earth or foreign material shall not be used.

A continuous supply of materials shall be provided to the work to ensure continuous placement.

401-4.4 Hauling equipment. Trucks used for hauling asphalt shall have tight, clean, and smooth metal beds. To prevent the asphalt from sticking to the truck beds, the truck beds shall be lightly coated with a minimum amount of paraffin oil, lime solution, or other material approved by the RPR. Petroleum products shall not be used for coating truck beds. Each truck shall have a suitable cover to protect the mixture from adverse weather. When necessary, to ensure that the mixture will be delivered to the site at the specified temperature, truck beds shall be insulated or heated and covers shall be securely fastened.

401-4.4.1 Material transfer vehicle (MTV). Material transfer vehicles used to transfer the material from the hauling equipment to the paver, shall use a self-propelled, material transfer vehicle with a swing conveyor that can deliver material to the paver without making contact with the paver. The MTV shall be able to move back and forth between the hauling equipment and the paver providing material transfer to the paver, while allowing the paver to operate at a constant speed. The Material Transfer Vehicle will have remixing and storage capability to prevent physical and thermal segregation. **401-4.5 Asphalt pavers.** Asphalt pavers shall be self-propelled with an activated heated screed, capable of spreading and finishing courses of asphalt that will meet the specified thickness, smoothness, and grade. The paver shall have sufficient power to propel itself and the hauling equipment without adversely affecting the finished surface. The asphalt paver shall be equipped with a control system capable of automatically maintaining the specified screed grade and elevation.

If the spreading and finishing equipment in use leaves tracks or indented areas, or produces other blemishes in the pavement that are not satisfactorily corrected by the scheduled operations, the use of such equipment shall be discontinued.

The paver shall be capable of paving to a minimum width specified in paragraph 401-4.12.

401-4.6 Rollers. The number, type, and weight of rollers shall be sufficient to compact the asphalt to the required density while it is still in a workable condition without crushing of the aggregate, depressions or other damage to the pavement surface. Rollers shall be in good condition, clean, and capable of operating at slow speeds to avoid displacement of the asphalt. All rollers shall be specifically designed and suitable for compacting asphalt concrete and shall be properly used. Rollers that impair the stability of any layer of a pavement structure or underlying soils shall not be used.

401-4.7 Density device. The Contractor shall have on site a density gauge during all paving operations in order to assist in the determination of the optimum rolling pattern, type of roller and frequencies, as well as to monitor the effect of the rolling operations during production paving. The Contractor shall supply a qualified technician during all paving operations to calibrate the gauge and obtain accurate density readings for all new asphalt. These densities shall be supplied to the RPR upon request at any time during construction. No separate payment will be made for supplying the density gauge and technician.

401-4.8 Preparation of asphalt binder. The asphalt binder shall be heated in a manner that will avoid local overheating and provide a continuous supply of the asphalt binder to the mixer at a uniform temperature. The temperature of unmodified asphalt binder delivered to the mixer shall be sufficient to provide a suitable viscosity for adequate coating of the aggregate particles, but shall not exceed 325°F when added to the aggregate. The temperature of modified asphalt binder shall be no more than 350°F when added to the aggregate.

401-4.9 Preparation of mineral aggregate. The aggregate for the asphalt shall be heated and dried. The maximum temperature and rate of heating shall be such that no damage occurs to the aggregates. The temperature of the aggregate and mineral filler shall not exceed 350°F when the asphalt binder is added. Particular care shall be taken that aggregates high in calcium or magnesium content are not damaged by overheating. The temperature shall not be lower than is required to obtain complete coating and uniform distribution on the aggregate particles and to provide a mixture of satisfactory workability.

401-4.10 Preparation of Asphalt mixture. The aggregates and the asphalt binder shall be weighed or metered and mixed in the amount specified by the JMF. The combined materials shall be mixed until the aggregate obtains a uniform coating of asphalt binder and is thoroughly distributed throughout the mixture. Wet mixing time shall be the shortest time that will produce a satisfactory mixture, but not less than 25 seconds for batch plants. The wet mixing time for all plants shall be established by the Contractor, based on the procedure for determining the percentage of coated particles described in ASTM D2489, for each individual plant and for each type of aggregate used. The wet mixing time will be set to achieve 95% of coated particles. For continuous mix plants, the minimum mixing time shall be determined by dividing the

weight of its contents at operating level by the weight of the mixture delivered per second by the mixer. The moisture content of all asphalt upon discharge shall not exceed 0.5%.

401-4.11 Application of Prime and Tack Coat. Immediately before placing the asphalt mixture, the underlying course shall be cleaned of all dust and debris.

A prime coat in accordance with Item P-602 shall be applied to aggregate base prior to placing the asphalt mixture.

A tack coat shall be applied in accordance with Item P-603 to all vertical and horizontal asphalt and concrete surfaces prior to placement of the first and each subsequent lift of asphalt mixture.

401-4.12 Laydown plan, transporting, placing, and finishing. Prior to the placement of the asphalt, the Contractor shall prepare a laydown plan with the sequence of paving lanes and width to minimize the number of cold joints; the location of any temporary ramps; laydown temperature; and estimated time of completion for each portion of the work (milling, paving, rolling, cooling, etc.). The laydown plan and any modifications shall be approved by the RPR.

Deliveries shall be scheduled so that placing and compacting of asphalt is uniform with minimum stopping and starting of the paver. Hauling over freshly placed material shall not be permitted until the material has been compacted, as specified, and allowed to cool to approximately ambient temperature. The Contractor, at their expense, shall be responsible for repair of any damage to the pavement caused by hauling operations.

Contractor shall survey each lift of asphalt surface course and certify to RPR that every lot of each lift meets the grade tolerances of paragraph 401-6.2d before the next lift can be placed.

Edges of existing asphalt pavement abutting the new work shall be saw cut and the cut off material and laitance removed. Apply a tack coat in accordance with P-603 before new asphalt material is placed against it.

The speed of the paver shall be regulated to eliminate pulling and tearing of the asphalt mat. Placement of the asphalt mix shall begin along the centerline of a crowned section or on the high side of areas with a one way slope unless shown otherwise on the laydown plan as accepted by the RPR. The asphalt mix shall be placed in consecutive adjacent lanes having a minimum width of **15** feet except where edge lanes require less width to complete the area. Additional screed sections attached to widen the paver to meet the minimum lane width requirements must include additional auger sections to move the asphalt mixture uniformly along the screed extension.

The longitudinal joint in one course shall offset the longitudinal joint in the course immediately below by at least one foot; however, the joint in the surface top course shall be at the centerline of crowned pavements. Transverse joints in one course shall be offset by at least 10 feet from transverse joints in the previous course. Transverse joints in adjacent lanes shall be offset a minimum of 10 feet. On areas where irregularities or unavoidable obstacles make the use of mechanical spreading and finishing equipment impractical, the asphalt may be spread and luted by hand tools.

The RPR may at any time, reject any batch of asphalt, on the truck or placed in the mat, which is rendered unfit for use due to contamination, segregation, incomplete coating of aggregate, or overheated asphalt mixture. Such rejection may be based on only visual inspection or temperature measurements. In the event of such rejection, the Contractor may take a representative sample of the rejected material in the presence of the RPR, and if it can be demonstrated in the laboratory, in the presence of the RPR, that such material was erroneously rejected, payment will be made for the material at the contract unit price.

Areas of segregation in the surface course, as determined by the RPR, shall be removed and replaced at the Contractor's expense. The area shall be removed by saw cutting and milling a minimum of the construction lift thickness as specified in paragraph 401-3.3, Table 2 for the approved mix design. The area to be removed and replaced shall be a minimum width of the paver and a minimum of 10 feet long.

401-4.13 Compaction of asphalt mixture. After placing, the asphalt mixture shall be thoroughly and uniformly compacted by self-propelled rollers. The surface shall be compacted as soon as possible when the asphalt has attained sufficient stability so that the rolling does not cause undue displacement, cracking or shoving. The sequence of rolling operations and the type of rollers used shall be at the discretion of the Contractor. The speed of the roller shall, at all times, be sufficiently slow to avoid displacement of the hot mixture and be effective in compaction. Any surface defects and/or displacement occurring as a result of the roller, or from any other cause, shall be corrected at the Contractor's expense.

Sufficient rollers shall be furnished to handle the output of the plant. Rolling shall continue until the surface is of uniform texture, true to grade and cross-section, and the required field density is obtained. To prevent adhesion of the asphalt to the roller, the wheels shall be equipped with a scraper and kept moistened with water as necessary.

In areas not accessible to the roller, the mixture shall be thoroughly compacted with approved power tampers.

Any asphalt that becomes loose and broken, mixed with dirt, contains check-cracking, or in any way defective shall be removed and replaced with fresh hot mixture and immediately compacted to conform to the surrounding area. This work shall be done at the Contractor's expense. Skin patching shall not be allowed.

401-4.14 Joints. The formation of all joints shall be made to ensure a continuous bond between the courses and obtain the required density. All joints shall have the same texture as other sections of the course and meet the requirements for smoothness and grade.

The roller shall not pass over the unprotected end of the freshly laid asphalt except when necessary to form a transverse joint. When necessary to form a transverse joint, it shall be made by means of placing a bulkhead or by tapering the course. The tapered edge shall be cut back to its full depth and width on a straight line to expose a vertical face prior to placing the adjacent lane. In both methods, all contact surfaces shall be coated with an asphalt tack coat before placing any fresh asphalt against the joint.

Longitudinal joints which have been left exposed for more than four (4) hours; the surface temperature has cooled to less than 175°F; or are irregular, damaged, uncompacted or otherwise defective shall be cut back with a cutting wheel or pavement saw a maximum of 3 inches to expose a clean, sound, uniform vertical surface for the full depth of the course. All cutback material and any laitance produced from cutting joints shall be removed from the project. Asphalt tack coat in accordance with P-603 shall be applied to the clean, dry joint prior to placing any additional fresh asphalt against the joint. The cost of this work shall be considered incidental to the cost of the asphalt.

401-4.15 Saw-cut grooving. Saw-cut grooving is not required.

401-4.16 Diamond grinding. Diamond grinding shall be completed prior to pavement grooving. Diamond grinding shall be accomplished by sawing with saw blades impregnated with industrial diamond abrasive.

Diamond grinding shall be performed with a machine designed specifically for diamond grinding capable of cutting a path at least 3 feet wide. The saw blades shall be 1/8-inch wide with a sufficient number of blades to create grooves between 0.090 and 0.130 inches wide; and peaks and ridges approximately 1/32 inch higher than the bottom of the grinding cut. The actual number of blades will be determined by the Contractor and depend on the hardness of the aggregate. Equipment or grinding procedures that cause ravels, aggregate fractures, spalls or disturbance to the pavement will not be permitted. Contractor shall demonstrate to the RPR that the grinding equipment will produce satisfactory results prior to making corrections to surfaces. Grinding will be tapered in all directions to provide smooth transitions to areas not requiring grinding. The slurry resulting from the grinding operation shall be continuously removed and the pavement left in a clean condition. The Contractor shall apply a surface treatment per P-608 to all areas that have been subject to grinding.

401-4.17 Nighttime paving requirements. The Contractor shall provide adequate lighting during any nighttime construction. A lighting plan shall be submitted by the Contractor and approved by the RPR prior to the start of any nighttime work. All work shall be in accordance with the approved CSPP and lighting plan.

CONTRACTOR QUALITY CONTROL (CQC)

401-5.1 General. The Contractor shall develop a Contractor Quality Control Program (CQCP) in accordance with Item C-100. No partial payment will be made for materials without an approved CQCP **.**

401-5.2 Contractor quality control (QC) facilities. The Contractor shall provide or contract for testing facilities in accordance with Item C-100. The RPR shall be permitted unrestricted access to inspect the Contractor's QC facilities and witness QC activities. The RPR will advise the Contractor in writing of any noted deficiencies concerning the QC facility, equipment, supplies, or testing personnel and procedures. When the deficiencies are serious enough to be adversely affecting the test results, the incorporation of the materials into the work shall be suspended immediately and will not be permitted to resume until the deficiencies are satisfactorily corrected.

401-5.3 Contractor QC testing. The Contractor shall perform all QC tests necessary to control the production and construction processes applicable to these specifications and as set forth in the approved CQCP. The testing program shall include, but not necessarily be limited to, tests for the control of asphalt content, aggregate gradation, temperatures, aggregate moisture, field compaction, and surface smoothness. A QC Testing Plan shall be developed as part of the CQCP.

a. Asphalt content. A minimum of two tests shall be performed per day in accordance with ASTM D6307 or ASTM D2172 for determination of asphalt content. When using ASTM D6307, the correction factor shall be determined as part of the first test performed at the beginning of plant production; and as part of every tenth test performed thereafter. The asphalt content for the day will be determined by averaging the test results.

b. Gradation. Aggregate gradations shall be determined a minimum of twice per day from mechanical analysis of extracted aggregate in accordance with ASTM D5444, ASTM C136, and ASTM C117.

c. Moisture content of aggregate. The moisture content of aggregate used for production shall be determined a minimum of once per day in accordance with ASTM C566.

d. Moisture content of asphalt. The moisture content shall be determined once per day in accordance with AASHTO T329 or ASTM D1461.

e. Temperatures. Temperatures shall be checked, at least four times per day, at necessary locations to determine the temperatures of the dryer, the asphalt binder in the storage tank, the asphalt at the plant, and the asphalt at the job site.

f. In-place density monitoring. The Contractor shall conduct any necessary testing to ensure that the specified density is being achieved. A nuclear gauge may be used to monitor the pavement density in accordance with ASTM D2950.

g. Smoothness for Contractor Quality Control.

The Contractor shall perform smoothness testing in transverse and longitudinal directions daily to verify that the construction processes are producing pavement with variances less than ¼ inch in 12 feet, identifying areas that may pond water which could lead to hydroplaning of aircraft. If the smoothness criteria is not met, appropriate changes and corrections to the construction process shall be made by the Contractor before construction continues

The Contractor may use a 12-foot straightedge, a rolling inclinometer meeting the requirements of ASTM E2133 or rolling external reference device that can simulate a 12-foot straightedge approved by the RPR. Straight-edge testing shall start with one-half the length of the straightedge at the edge of pavement section being tested and then moved ahead one-half the length of the straightedge for each successive measurement. Testing shall be continuous across all joints. The surface irregularity shall be determined by placing the freestanding (unleveled) straightedge on the pavement surface and allowing it to rest upon the two highest spots covered by its length, and measuring the maximum gap between the straightedge and the pavement surface in the area between the two high points. If the rolling inclinometer or external reference device is used, the data may be evaluated using the FAA profile program, ProFAA, using the 12-foot straightedge simulation function.

Smoothness readings shall not be made across grade changes or cross slope transitions. The transition between new and existing pavement shall be evaluated separately for conformance with the plans.

(1) Transverse measurements. Transverse measurements shall be taken for each day's production placed. Transverse measurements shall be taken perpendicular to the pavement centerline each 50 feet (15 m) or more often as determined by the RPR. The joint between lanes shall be tested separately to facilitate smoothness between lanes.

(2) Longitudinal measurements. Longitudinal measurements shall be taken for each day's production placed. Longitudinal tests shall be parallel to the centerline of paving; at the center of paving lanes when widths of paving lanes are less than 20 feet; and at the third points of paving lanes when widths of paving lanes are 20 ft or greater.

Deviations on the final surface course in either the transverse or longitudinal direction that will trap water greater than 1/4 inch shall be corrected with diamond grinding per paragraph 401-4.16 or by removing and replacing the surface course to full depth. Grinding shall be tapered in all directions to provide smooth transitions to areas not requiring grinding. All areas in which diamond grinding has been performed shall be subject to the final pavement thickness tolerances specified in paragraph 401-6.1d(3). Areas that have been ground shall be sealed with a surface treatment in accordance with Item P-608. To avoid the surface treatment creating any conflict with runway or taxiway markings, it may be necessary to seal a larger area.

Control charts shall be kept to show area of each day's placement and the percentage of corrective grinding required. Corrections to production and placement shall be initiated when corrective grinding is required. If the Contractor's machines and/or methods produce significant areas that need corrective actions in excess of 10 percent of a day's production, production shall be stopped until corrective measures are implemented by the Contractor.

h. Grade. Grade shall be evaluated daily to allow adjustments to paving operations when grade measurements do not meet specifications. As a minimum, grade shall be evaluated prior to and after the placement of the first lift and after placement of the surface lift.

Measurements will be taken at appropriate gradelines (as a minimum at center and edges of paving lane) and longitudinal spacing as shown on cross-sections and plans. The final surface of the pavement will not vary from the gradeline elevations and cross-sections shown on the plans by more than 1/2 inch vertically **and 0.1 feet laterally** . The documentation will be provided by the Contractor to the RPR **by the end of the following working day**.

Areas with humps or depressions that exceed grade or smoothness criteria and that retain water on the surface must be ground off provided the course thickness after grinding is not more than 1/2 inch less than the thickness specified on the plans. Grinding shall be in accordance with paragraph 401-4.16.

The Contractor shall repair low areas or areas that cannot be corrected by grinding by removal of deficient areas to the depth of the final course plus ½ inch and replacing with new material. Skin patching is not allowed.

401-5.4 Sampling. When directed by the RPR, the Contractor shall sample and test any material that appears inconsistent with similar material being sampled, unless such material is voluntarily removed and replaced or deficiencies corrected by the Contractor. All sampling shall be in accordance with standard procedures specified.

401-5.5 Control charts. The Contractor shall maintain linear control charts for both individual measurements and range (i.e. difference between highest and lowest measurements) for aggregate gradation, asphalt content, and VMA. The VMA for each day will be calculated and monitored by the QC laboratory.

Control charts shall be posted in a location satisfactory to the RPR and kept current. As a minimum, the control charts shall identify the project number, the contract item number, the test number, each test parameter, the Action and Suspension Limits applicable to each test parameter, and the Contractor's test results. The Contractor shall use the control charts as part of a process control system for identifying potential problems and assignable causes before they occur. If the Contractor's projected data during production indicates a problem and the Contractor is not taking satisfactory corrective action, the RPR may suspend production or acceptance of the material.

a. Individual measurements. Control charts for individual measurements shall be established to maintain process control within tolerance for aggregate gradation, asphalt content, and VMA. The control charts shall use the job mix formula target values as indicators of central tendency for the following test parameters with associated Action and Suspension Limits:

Control Chart Limits for Individual Measurements

Sieve	**Action Limit**	**Suspension Limit**
3/4 inch	±6%	±9%
1/2 inch	±6%	±9%
3/8 inch	±6%	±9%
No. 4	±6%	±9%
No. 16	±5%	±7.5%
No. 50	±3%	±4.5%
No. 200	±2%	±3%
Asphalt Content	±0.45%	±0.70%
Minimum VMA	-0.5%	-1.0%

b. Range. Control charts shall be established to control gradation process variability. The range shall be plotted as the difference between the two test results for each control parameter. The Suspension Limits specified below are based on a sample size of n = 2. Should the Contractor elect to perform more than two tests per lot, the Suspension Limits shall be adjusted by multiplying the Suspension Limit by 1.18 for n = 3 and by 1.27 for n = 4.

Control Chart Limits Based on Range

Sieve	**Suspension Limit**
1/2 inch	11%
3/8 inch	11%
No. 4	11%
No. 16	9%
No. 50	6%
No. 200	3.5%
Asphalt Content	0.8%

c. Corrective Action. The CQCP shall indicate that appropriate action shall be taken when the process is believed to be out of tolerance. The Plan shall contain rules to gauge when a process is out of control and detail what action will be taken to bring the process into control. As a minimum, a process shall be deemed out of control and production stopped and corrective action taken, if:

(1) One point falls outside the Suspension Limit line for individual measurements or range; or

(2) Two points in a row fall outside the Action Limit line for individual measurements.

401-5.6 QC reports. The Contractor shall maintain records and shall submit reports of QC activities daily, in accordance with Item C-100.

MATERIAL ACCEPTANCE

401-6.1 Acceptance sampling and testing. Unless otherwise specified, all acceptance sampling and testing necessary to determine conformance with the requirements specified in this section will be performed by the RPR at no cost to the Contractor except that coring as required in this section shall be completed and paid for by the Contractor.

a. Quality assurance (QA) testing laboratory. The QA testing laboratory performing these acceptance tests will be accredited in accordance with ASTM D3666. The QA laboratory accreditation will be current and listed on the accrediting authority's website. All test methods required for acceptance sampling and testing will be listed on the lab accreditation.

b. Lot size. A standard lot will be equal to one day's production divided into approximately equal sublots of between 400 to 600 tons. When only one or two sublots are produced in a day's production, the sublots will be combined with the production lot from the previous or next day.

Where more than one plant is simultaneously producing asphalt for the job, the lot sizes will apply separately for each plant.

c. Asphalt air voids. Plant-produced asphalt will be tested for air voids on a sublot basis.

(1) Sampling. Material from each sublot shall be sampled in accordance with ASTM D3665. Samples shall be taken from material deposited into trucks at the plant or at the job site in accordance with ASTM D979. The sample of asphalt may be put in a covered metal tin and placed in an oven for not less than 30 minutes nor more than 60 minutes to maintain the material at or above the compaction temperature as specified in the JMF. If absorptive aggregates are used, as determined by the Engineer, hold times are to be increased to not less than 60 minutes and not more than 90 minutes.(2)

Testing. Air voids will be determined for each sublot in accordance with ASTM D3203 for a set of compacted specimens prepared in accordance with **ASTM D6925**.

d. In-place asphalt mat and joint density. Each sublot will be tested for in-place mat and joint density as a percentage of the theoretical maximum density (TMD).

(1) Sampling. The **Contractor** will cut minimum 5 inch diameter samples in accordance with ASTM D5361. The Contractor shall furnish all tools, labor, and materials for cleaning, and filling the cored pavement. Laitance produced by the coring operation shall be removed immediately after coring, and core holes shall be filled within one day after sampling in a manner acceptable to the RPR.

(2) Bond. Each lift of asphalt shall be bonded to the underlying layer. If cores reveal that the surface is not bonded, additional cores shall be taken as directed by the RPR to determine the extent of unbonded areas. Unbonded areas shall be removed by milling and replaced at no additional cost as directed by the RPR.

(3) Thickness. Thickness of each lift of surface course will be evaluated by the RPR for compliance to the requirements shown on the plans after any necessary corrections for grade. Measurements of thickness will be made using the cores extracted for each sublot for density measurement. The maximum allowable deficiency at any point will not be more than 1/4 inch less than the thickness indicated for the lift. Average thickness of lift, or combined lifts, will not be less than the indicated thickness. Where the thickness tolerances are not met, the lot or sublot shall be corrected by the Contractor at his expense by removing the deficient area and replacing with new pavement. The Contractor, at his expense, may take additional cores as approved by the RPR to circumscribe the deficient area.

(4) Mat density. One core shall be taken from each sublot. Core locations will be determined by the RPR in accordance with ASTM D3665. Cores for mat density shall not be taken closer than one foot from a transverse or longitudinal joint. The bulk specific gravity of each cored sample will be determined in accordance with ASTM D2726. The percent compaction (density) of each sample will be determined by dividing the bulk specific gravity of each sublot sample by the TMD for that sublot.

(5) Joint density. One core centered over the longitudinal joint shall be taken for each sublot that has a longitudinal joint. Core locations will be determined by the RPR in accordance with ASTM D3665. The bulk specific gravity of each core sample will be determined in accordance with ASTM D2726. The percent compaction (density) of each sample will be determined by dividing the bulk specific gravity of each joint density sample by the average TMD for the lot. The TMD used to determine the joint density at joints formed between lots will be the lower of the average TMD values from the adjacent lots.

401-6.2 Acceptance criteria.

a. General. Acceptance will be based on the implementation of the Contractor Quality Control Program (CQCP) and the following characteristics of the asphalt and completed pavements: air voids, mat density, joint density, grade**.**

b. Air Voids and Mat density. Acceptance of each lot of plant produced material for mat density and air voids will be based on the percentage of material within specification limits (PWL). If the PWL of the lot equals or exceeds 90%, the lot will be acceptable. Acceptance and payment will be determined in accordance with paragraph 401-8.1.

c. Joint density. Acceptance of each lot of plant produced asphalt for joint density will be based on the PWL. If the PWL of the lot is equal to or exceeds 90%, the lot will be considered acceptable. If the PWL is less than 90%, the Contractor shall evaluate the reason and act accordingly. If the PWL is less than 80%, the Contractor shall cease operations and until the reason for poor compaction has been determined. If the PWL is less than 71%, the pay factor for the lot used to complete the joint will be reduced by five (5) percentage points. This lot pay factor reduction will be incorporated and evaluated in accordance with paragraph 401-8.1.

d. Grade. The final finished surface of the pavement shall be surveyed to verify that the grade elevations and cross-sections shown on the plans do not deviate more than 1/2 inch vertically **or 0.1 feet laterally**.

Cross-sections of the pavement shall be taken at a minimum **50-foot** longitudinal spacing and at all longitudinal grade breaks. Minimum cross-section grade points shall include grade at centerline, **and at 50' offset intervals**.

The survey and documentation shall be stamped and signed by a licensed surveyor. Payment for sublots that do not meet grade for over 25% of the sublot shall not be more than 95%.

e. Profilograph roughness for QA Acceptance. Not used.

401-6.3 Percentage of material within specification limits (PWL). The PWL will be determined in accordance with procedures specified in Item C-110. The specification tolerance limits (L) for lower and (U) for upper are contained in Table 5.

Table 5. Acceptance Limits for Air Voids and Density

Test Property	**Pavements Specification Tolerance Limits**	
	L	**U**
Air Voids Total Mix (%)	2.0	5.0
Surface Course Mat Density (%)	92.8	-
Base Course Mat Density (%)	92.0	-
Joint density (%)	90.5	--

a. Outliers. All individual tests for mat density and air voids will be checked for outliers (test criterion) in accordance with ASTM E178, at a significance level of 5%. Outliers will be discarded, and the PWL will be determined using the remaining test values. The criteria in Table 5 is based on production processes which have a variability with the following standard deviations: Surface Course Mat Density (%), 1.30; Base Course Mat Density (%), 1.55; Joint Density (%), 1.55.

The Contractor should note that (1) 90 PWL is achieved when consistently producing a surface course with an average mat density of at least 94.5% with 1.30% or less variability, (2) 90 PWL is achieved when consistently producing a base course with an average mat density of at least 94.0% with 1.55% or less variability, and (3) 90 PWL is achieved when consistently producing joints with an average joint density of at least 92.5% with 1.55% or less variability.

401-6.4 Resampling pavement for mat density.

a. General. Resampling of a lot of pavement will only be allowed for mat density, and then, only if the Contractor requests same, in writing, within 48 hours after receiving the written test results from the RPR. A retest will consist of all the sampling and testing procedures contained in paragraphs 401-6.1d and 401-6.2b. Only one resampling per lot will be permitted.

(1) A redefined PWL will be calculated for the resampled lot. The number of tests used to calculate the redefined PWL will include the initial tests made for that lot plus the retests.

(2) The cost for resampling and retesting shall be borne by the Contractor.

b. Payment for resampled lots. The redefined PWL for a resampled lot will be used to calculate the payment for that lot in accordance with Table 6.

c. Outliers. Check for outliers in accordance with ASTM E178, at a significance level of 5%.

METHOD OF MEASUREMENT

401-7.1 Measurement. Asphalt shall be measured by the number of tons of asphalt used in the accepted work. Batch weights or truck scale weights will be used to determine the basis for the tonnage.

BASIS OF PAYMENT

401-8.1 Payment. Payment for a lot of asphalt meeting all acceptance criteria as specified in paragraph 401-6.2 shall be made based on results of tests for mat density and air voids. Payment for acceptable lots shall be adjusted according to paragraph 401-8.1c for mat density and air voids; and paragraph 401-6.2c for joint density, subject to the limitation that:

a. The total project payment for plant mix asphalt pavement shall not exceed **100** percent of the product of the contract unit price and the total number of tons of asphalt used in the accepted work.

b. The price shall be compensation for furnishing all materials, for all preparation, mixing, and placing of these materials, and for all labor, equipment, tools, and incidentals necessary to complete the item.

c. Basis of adjusted payment. The pay factor for each individual lot shall be calculated in accordance with Table 6. A pay factor shall be calculated for both mat density and air voids. The lot pay factor shall be the higher of the two values when calculations for both mat density and air voids are 100% or higher. The lot pay factor shall be the product of the two values when only one of the calculations for either mat density or air voids is 100% or higher. The lot pay factor shall be the lower of the two values when calculations for both mat density and air voids are less than 100%. If PWL for joint density is less than 71% then the lot pay factor shall be reduced by 5% but be no higher than 95%.

For each lot accepted, the adjusted contract unit price shall be the product of the lot pay factor for the lot and the contract unit price. Payment shall be subject to the total project payment limitation specified in paragraph 401-8.1a. Payment in excess of 100% for accepted lots of asphalt shall be used to offset payment for accepted lots of asphalt pavement that achieve a lot pay factor less than 100%.

Payment for sublots which do not meet grade in accordance with paragraph 401-6.2d after correction for over 25% of the sublot shall be reduced by 5%.

Table 6. Price adjustment schedule[1]

Percentage of material within specification limits (PWL)	Lot pay factor (percent of contract unit price)
96 – 100	106
90 – 95	PWL + 10
75 – 89	0.5 PWL + 55
55 – 74	1.4 PWL – 12
Below 55	Reject [2]

[1] Although it is theoretically possible to achieve a pay factor of 106% for each lot, actual payment above 100% shall be subject to the total project payment limitation specified in paragraph 401-8.1a.

[2] The lot shall be removed and replaced. However, the RPR may decide to allow the rejected lot to remain. In that case, if the RPR and Contractor agree in writing that the lot shall not be removed, it shall be paid for at 50% of the contract unit price and the total project payment shall be reduced by the amount withheld for the rejected lot.

d. Profilograph Roughness. Not used.

401-8.1 Payment.

Payment will be made under:

Item P-401	Asphalt Surface Course - per ton

REFERENCES

The publications listed below form a part of this specification to the extent referenced. The publications are referred to within the text by the basic designation only.

ASTM International (ASTM)

ASTM C29	Standard Test Method for Bulk Density ("Unit Weight") and Voids in Aggregate
ASTM C88	Standard Test Method for Soundness of Aggregates by Use of Sodium Sulfate or Magnesium Sulfate
ASTM C117	Standard Test Method for Materials Finer than 75-μm (No. 200) Sieve in Mineral Aggregates by Washing
ASTM C127	Standard Test Method for Density, Relative Density (Specific Gravity) and Absorption of Coarse Aggregate
ASTM C131	Standard Test Method for Resistance to Degradation of Small-Size Coarse Aggregate by Abrasion and Impact in the Los Angeles Machine
ASTM C136	Standard Test Method for Sieve or Screen Analysis of Fine and Coarse Aggregates
ASTM C142	Standard Test Method for Clay Lumps and Friable Particles in Aggregates
ASTM C566	Standard Test Method for Total Evaporable Moisture Content of Aggregate by Drying
ASTM D75	Standard Practice for Sampling Aggregates
ASTM D242	Standard Specification for Mineral Filler for Bituminous Paving Mixtures
ASTM D946	Standard Specification for Penetration-Graded Asphalt Cement for Use in Pavement Construction
ASTM D979	Standard Practice for Sampling Asphalt Paving Mixtures
ASTM D1073	Standard Specification for Fine Aggregate for Asphalt Paving Mixtures
ASTM D1188	Standard Test Method for Bulk Specific Gravity and Density of Compacted Bituminous Mixtures Using Coated Samples
ASTM D2172	Standard Test Method for Quantitative Extraction of Bitumen from Asphalt Paving Mixtures
ASTM D1461	Standard Test Method for Moisture or Volatile Distillates in Asphalt Paving Mixtures
ASTM D2041	Standard Test Method for Theoretical Maximum Specific Gravity and Density of Bituminous Paving Mixtures

ASTM D2419	Standard Test Method for Sand Equivalent Value of Soils and Fine Aggregate
ASTM D2489	Standard Practice for Estimating Degree of Particle Coating of Bituminous-Aggregate Mixtures
ASTM D2726	Standard Test Method for Bulk Specific Gravity and Density of Non-Absorptive Compacted Bituminous Mixtures
ASTM D2950	Standard Test Method for Density of Bituminous Concrete in Place by Nuclear Methods
ASTM D3203	Standard Test Method for Percent Air Voids in Compacted Dense and Open Bituminous Paving Mixtures
ASTM D3381	Standard Specification for Viscosity-Graded Asphalt Cement for Use in Pavement Construction
ASTM D3665	Standard Practice for Random Sampling of Construction Materials
ASTM D3666	Standard Specification for Minimum Requirements for Agencies Testing and Inspecting Road and Paving Materials
ASTM D4318	Standard Test Methods for Liquid Limit, Plastic Limit, and Plasticity Index of Soils
ASTM D4552	Standard Practice for Classifying Hot-Mix Recycling Agents
ASTM D4791	Standard Test Method for Flat Particles, Elongated Particles, or Flat and Elongated Particles in Coarse Aggregate
ASTM D4867	Standard Test Method for Effect of Moisture on Asphalt Concrete Paving Mixtures
ASTM D5361	Standard Practice for Sampling Compacted Asphalt Mixtures for Laboratory Testing
ASTM D5444	Standard Test Method for Mechanical Size Analysis of Extracted Aggregate
ASTM D5821	Standard Test Method for Determining the Percentage of Fractured Particles in Coarse Aggregate
ASTM D6084	Standard Test Method for Elastic Recovery of Bituminous Materials by Ductilometer
ASTM D6307	Standard Test Method for Asphalt Content of Hot Mix Asphalt by Ignition Method
ASTM D6373	Standard Specification for Performance Graded Asphalt Binder
ASTM D6752	Standard Test Method for Bulk Specific Gravity and Density of Compacted Bituminous Mixtures Using Automatic Vacuum Sealing Method
ASTM D6925	Standard Test Method for Preparation and Determination of the Relative Density of Hot Mix Asphalt (HMA) Specimens by Means of the SuperPave Gyratory Compactor.
ASTM D6926	Standard Practice for Preparation of Bituminous Specimens Using Marshall Apparatus

ASTM D6927	Standard Test Method for Marshall Stability and Flow of Bituminous Mixtures
ASTM D6995	Standard Test Method for Determining Field VMA based on the Maximum Specific Gravity of the Mix (Gmm)
ASTM E11	Standard Specification for Woven Wire Test Sieve Cloth and Test Sieves
ASTM E178	Standard Practice for Dealing with Outlying Observations
ASTM E1274	Standard Test Method for Measuring Pavement Roughness Using a Profilograph
ASTM E950	Standard Test Method for Measuring the Longitudinal Profile of Traveled Surfaces with an Accelerometer Established Inertial Profiling Reference
ASTM E2133	Standard Test Method for Using a Rolling Inclinometer to Measure Longitudinal and Transverse Profiles of a Traveled Surface

American Association of State Highway and Transportation Officials (AASHTO)

AASHTO M156	Standard Specification for Requirements for Mixing Plants for Hot-Mixed, Hot-Laid Bituminous Paving Mixtures.
AASHTO T329	Standard Method of Test for Moisture Content of Hot Mix Asphalt (HMA) by Oven Method
AASHTO T324	Standard Method of Test for Hamburg Wheel-Track Testing of Compacted Asphalt Mixtures
AASHTO T 340	Standard Method of Test for Determining the Rutting Susceptibility of Hot Mix Asphalt (APA) Using the Asphalt Pavement Analyzer (APA)

Asphalt Institute (AI)

Asphalt Institute Handbook MS-26, Asphalt Binder

Asphalt Institute MS-2 Mix Design Manual, 7th Edition

AI State Binder Specification Database

Federal Highway Administration (FHWA)

Long Term Pavement Performance Binder Program

Advisory Circulars (AC)

AC 150/5320-6	Airport Pavement Design and Evaluation

FAA Orders

5300.1	Modifications to Agency Airport Design, Construction, and Equipment Standards

Software

FAARFIELD

END OF ITEM P-401

Item P-403

Asphalt Mix Pavement Base Course

DESCRIPTION

403-1.1 This item shall consist of pavement courses composed of mineral aggregate and asphalt binder mixed in a central mixing plant and placed on a prepared course in accordance with these specifications and shall conform to the lines, grades, thicknesses, and typical cross-sections shown on the plans. Each course shall be constructed to the depth, typical section, and elevation required by the plans and shall be rolled, finished, and approved before the placement of the next course.

MATERIALS

403-2.1 Aggregate. Aggregates shall consist of crushed stone, crushed gravel, crushed slag, screenings, natural sand and mineral filler, as required. The aggregates should have no known history of detrimental pavement staining due to ferrous sulfides, such as pyrite. Coarse aggregate is the material retained on the No. 4 sieve. Fine aggregate is the material passing the No. 4 sieve.

a. Coarse aggregate. Coarse aggregate shall consist of sound, tough, durable particles, free from films of matter that would prevent thorough coating and bonding with the asphalt material and free from organic matter and other deleterious substances. Coarse aggregate material requirements are given in the table below.

Coarse Aggregate Material Requirements

Material Test	Requirement	Standard
Resistance to Degradation	Loss: 40% maximum for surface, asphalt binder, and leveling course Loss: 50% maximum for base course	ASTM C131
Soundness of Aggregates by Use of Sodium Sulfate **or** Magnesium Sulfate	Loss after 5 cycles: 12% maximum using Sodium sulfate - or - 18% maximum using magnesium sulfate	ASTM C88
Clay lumps and friable particles	0.3% maximum	ASTM C142
Percentage of Fractured Particles	Minimum 75% by weight of particles with at least two fractured faces and 85% with at least one fractured face[1]	ASTM D5821
Flat, Elongated, or Flat and Elongated Particles	8% maximum, by weight, of flat, elongated, or flat and elongated particles with a value of 5:1 [2]	ASTM D4791
Bulk density of slag[3]	Weigh not less than 70 pounds per cubic foot	ASTM C29.

[1] The area of each face shall be equal to at least 75% of the smallest mid-sectional area of the piece. When two fractured faces are contiguous, the angle between the planes of fractures shall be at least 30 degrees to count as two fractured faces.

[2] A flat particle is one having a ratio of width to thickness greater than five (5); an elongated particle is one having a ratio of length to width greater than five (5).

[3] Only required if slag is specified.

b. Fine aggregate. Fine aggregate shall consist of clean, sound, tough, durable, angular shaped particles produced by crushing stone, slag, or gravel and shall be free from coatings of clay, silt, or other objectionable matter. Natural (non-manufactured) sand may be used to obtain the gradation of the aggregate blend or to improve the workability of the mix. Fine aggregate material requirements are listed in the table below.

Fine Aggregate Material Requirements

Material Test	Requirement	Standard
Liquid limit	25 maximum	ASTM D4318
Plasticity Index	4 maximum	ASTM D4318
Soundness of Aggregates by Use of Sodium Sulfate or Magnesium Sulfate	Loss after 5 cycles: 10% maximum using Sodium sulfate - or - 15% maximum using magnesium sulfate	ASTM C88
Clay lumps and friable particles	0.3% maximum	ASTM C142
Sand equivalent	**45 minimum**	ASTM D2419
Natural Sand	**0 to 15%** maximum by weight of total aggregate	ASTM D1073

c. Sampling. ASTM D75 shall be used in sampling coarse and fine aggregate, and ASTM C183 shall be used in sampling mineral filler.

403-2.2 Mineral filler. Mineral filler (baghouse fines) may be added in addition to material naturally present in the aggregate. Mineral filler shall meet the requirements of ASTM D242.

Mineral filler Requirements

Material Test	Requirement	Standard
Plasticity Index	4 maximum	ASTM D4318

403-2.3 Asphalt binder. Asphalt binder shall conform to ASTM D6373 Performance Grade (PG) **67-22**.

[

Asphalt Binder PG Plus Test Requirements

Material Test	Requirement	Standard
Elastic Recovery	75% minimum	ASTM D6084

]

403-2.4 Anti-stripping agent. Any anti-stripping agent or additive (anti-strip) shall be heat stable and shall not change the asphalt binder grade beyond specifications. Anti-strip shall be an approved material of the Department of Transportation of the State in which the project is located.

403-2.5 Bond Breaker. When placed under a PCC surface course a bond breaker meeting one of the following requirements shall be used:

a) **Choke stone (ASTM C33 Number 89 stone)**

b) **Fabric shall meet the requirements of AASHTO M 288 Class I woven fabric with elongation less than 50% at the specified strengths. A certificate of compliance (COC) shall be provided by the fabric manufacturer that the material may be used as a bond breaker.**

c) **Liquid membrane forming compound shall** conform to the requirements of ASTM C309, Type 2, Class A, or Class B.

COMPOSITION

403-3.1 Composition of mixture. The asphalt plant mix shall be composed of a mixture of well-graded aggregate, filler and anti-strip agent if required, and asphalt binder. The several aggregate fractions shall be sized, handled in separate size groups, and combined in such proportions that the resulting mixture meets the grading requirements of the job mix formula (JMF).

403-3.2 Job mix formula (JMF) laboratory. The laboratory used to develop the JMF shall possess a current certificate of accreditation, listing D3666 from a national accrediting authority and all test methods required for developing the JMF, and listed on the accrediting authority's website. A copy of the laboratory's current accreditation and accredited test methods shall be submitted to the RPR prior to start of construction.

403-3.3 Job mix formula (JMF). No asphalt mixture shall be placed until an acceptable mix design has been submitted to the RPR for review and accepted in writing. The RPR's review shall not relieve the Contractor of the responsibility to select and proportion the materials to comply with this section.

When the project requires asphalt mixtures of differing aggregate gradations and/or binders, a separate JMF shall be submitted for each mix. Add anti-stripping agent to meet tensile strength requirements.

The JMF shall be prepared by an accredited laboratory that meets the requirements of paragraph 403-3.2. The asphalt mixture shall be designed using procedures contained in Asphalt Institute MS-2 Mix Design Manual, 7th Edition. Samples shall be prepared and compacted using the gyratory compactor in accordance with ASTM D6925 **.**

Should a change in sources of materials be made, a new JMF must be submitted to the RPR for review and accepted in writing before the new material is used. After the initial production JMF has been approved by the RPR and a new or modified JMF is required for whatever reason, the subsequent cost of the new or modified JMF, including a new control strip when required by the RPR, will be borne by the Contractor.

The RPR may request samples at any time for testing, prior to and during production, to verify the quality of the materials and to ensure conformance with the applicable specifications.

The JMF shall be submitted in writing by the Contractor at least **30** days prior to the start of paving operations. The JMF shall be developed within the same construction season using aggregates proposed for project use.

The submitted JMF shall be dated, and stamped or sealed by the responsible professional Engineer of the laboratory and shall include the following items as a minimum:

- Manufacturer's Certificate of Analysis (COA) for the asphalt binder used in the JMF in accordance with paragraph 403-2.3. Certificate of asphalt performance grade is with modifier already added, if used and must indicate compliance with ASTM D6373. For plant modified asphalt binder, certified test report indicating grade certification of modified asphalt binder.
- Manufacturer's Certificate of Analysis (COA) for the anti-stripping agent if used in the JMF in accordance with paragraph 403-2.4.
- Certified material test reports for the course and fine aggregate and mineral filler in accordance with paragraphs 403-2.1 and 403-2.2.
- Percent passing each sieve size for individual gradation of each aggregate cold feed and/or hot bin; percent by weight of each cold feed and/or hot bin used; and the total combined gradation in the JMF.
- Specific Gravity and absorption of each course and fine aggregate.
- Percent natural sand.
- Percent fractured faces.
- Percent by weight of flat particles**,** elongated particles, and flat and elongated particles (and criteria).
- Percent of asphalt.
- Number of blows or gyrations.
- Laboratory mixing and compaction temperatures.
- Supplier recommended mixing and compaction temperatures.
- Plot of the combined gradation on the 0.45 power gradation curve.
- Graphical plots of air voids, voids in the mineral aggregate (VMA), and unit weight versus asphalt content. To achieve minimum VMA during production, the mix design needs to account for material breakdown during production.

- Tensile Strength Ratio (TSR).
- Type and amount of Anti-strip agent when used.
- Asphalt Pavement Analyzer (APA) results.
- Date the JMF was developed. Mix designs that are not dated or which are from a prior construction season shall not be accepted.
- **Percentage and properties (asphalt content, asphalt binder properties, and aggregate properties) of reclaimed asphalt pavement (RAP) in accordance with paragraph 403-3.4, Reclaimed Hot-Mix Asphalt, if RAP is used.**

Table 1. Asphalt Design Criteria

Test Property	**Value**	**Test Method**
Number of blows/gyrations	**75**	
Air voids (%)	3.5	ASTM D3203
Percent voids in mineral aggregate (VMA), minimum	See Table 2	ASTM D6995
TSR[1]	not less than **80** at a saturation of 70-80%	ASTM D4867
Asphalt Pavement Analyzer (APA)[2]	Less than 10 mm @ 4000 passes	AASHTO T340 at 250 psi hose pressure at 64°C test temperature

[1] Test specimens for TSR shall be compacted at 7 ± 1.0 % air voids. In areas subject to freeze-thaw, use freeze-thaw conditioning in lieu of moisture conditioning per ASTM D4867.

[2] AASHTO T340 at 100 psi hose pressure at 64°C test temperature may be used in the interim. If this method is used the required Value shall be less than 5 mm @ 8000 passes

The mineral aggregate shall be of such size that the percentage composition by weight, as determined by laboratory sieves, will conform to the gradation or gradations specified in Table 2 when tested in accordance with ASTM C136 and ASTM C117.

The gradations in Table 2 represent the limits that shall determine the suitability of aggregate for use from the sources of supply, be well graded from coarse to fine and shall not vary from the low limit on one sieve to the high limit on the adjacent sieve, or vice versa.

Table 2. Aggregate - Asphalt Pavements

Sieve Size	**Percentage by Weight Passing Sieve**
1 inch	**--**
3/4 inch	**100**
1/2 inch	**90-100**
3/8 inch	**72-88**
No. 4	**53-73**
No. 8	**38-60**
No. 16	**26-48**
No. 30	**18-38**
No. 50	**11-27**
No. 100	**6-18**
No. 200	**3-6**
Voids in Mineral Aggregate (VMA)[1]	**--**
Asphalt Percent:	
Stone or gravel	5-7.5
Recommended Minimum Construction Lift Thickness	2”

[1]To achieve minimum VMA during production, the mix design needs to account for material breakdown during production.

The aggregate gradations shown are based on aggregates of uniform specific gravity. The percentages passing the various sieves shall be corrected when aggregates of varying specific gravities are used, as indicated in the Asphalt Institute MS-2 Mix Design Manual, 7th Edition.

403-3.4 Reclaimed Asphalt Pavement (RAP). Reclaimed asphalt pavement shall consist of reclaimed asphalt pavement (RAP), coarse aggregate, fine aggregate, mineral filler, and asphalt. Recycled asphalt shingles (RAS) shall not be allowed. The RAP shall be of a consistent gradation and asphalt content and properties. When RAP is fed into the plant, the maximum RAP chunk size shall not exceed 1-1/2 inches. The reclaimed asphalt mix shall be designed using procedures contained in the Asphalt Institute MS-2 Mix Design Manual, 7th Edition. The percentage of asphalt in the RAP shall be established for the mixture design according to ASTM D2172 using the appropriate dust correction procedure. The JMF shall meet the requirements of paragraph 403-3.3. RAP should only be used for shoulder surface course mixes and for any intermediate courses. The use of RAP containing Coal Tar shall not be allowed. Coal Tar surface treatments must be removed prior to recycling underlying asphalt material. The amount of RAP shall be limited to **20** percent **.**

In addition to the requirements of paragraph 403-3.3, the JMF shall indicate the percent of reclaimed asphalt pavement and the percent and grade of new asphalt binder.

For the PG graded asphalt binder selected in paragraph 403-2.3, adjust as follows:

a. For 0-20% RAP, there is no change in virgin asphalt binder content.

b. For >20 to 30% RAP, select asphalt binder one grade softer, i.e., PG 64-22 would soften to PG 58-28.

403-3.5 Control strip. Full production shall not begin until an acceptable control strip has been constructed and accepted in writing by the RPR. The Contractor shall prepare and place a quantity of asphalt according to the JMF. The underlying grade or pavement structure upon which the control strip is to be constructed shall be the same as the remainder of the course represented by the control strip.

The Contractor will not be allowed to place the control strip until the Contractor quality control program (CQCP), showing conformance with the requirements of paragraph 403-5.1, has been accepted, in writing, by the RPR.

The control strip will consist of at least 250 tons or 1/2 sublot, whichever is greater. The control strip shall be placed in two lanes of the same width and depth to be used in production with a longitudinal cold joint. The cold joint must be cut back in accordance with paragraph 403-4.13 using the same procedure that will be used during production. The cold joint for the control strip will be an exposed construction joint at least four (4) hours old or when the mat has cooled to less than 160°F. The equipment used in construction of the control strip shall be the same type, configuration and weight to be used on the project.

The control strip shall be evaluated for acceptance as a single lot in accordance with the acceptance criteria in paragraph 403-6.1 and 403-6.2. The control strip shall be divided into equal sublots. As a minimum, the control strip shall consist of three (3) sublots.

The control strip will be considered acceptable by the RPR if the gradation, asphalt content, and VMA are within the action limits specified in paragraph 403-5.5a; and Mat density, air voids, and joint density meet the requirements specified in paragraphs 403-6.2.

If the control strip is unacceptable, necessary adjustments to the JMF, plant operation, placing procedures, and/or rolling procedures shall be made and another control strip shall be placed. Unacceptable control strips shall be removed at the Contractor's expense.

Payment will only be made for an acceptable control strip in accordance with paragraph 403-8.1.

CONSTRUCTION METHODS

403-4.1 Weather limitations. The asphalt shall not be placed upon a wet surface or when the surface temperature of the underlying course is less than specified in Table 4. The temperature requirements may be waived by the RPR, if requested; however, all other requirements including compaction shall be met.

Table 4. Surface Temperature Limitations of Underlying Course

Mat Thickness	Base Temperature (Minimum)	
	Degrees F	Degrees C
3 inches or greater	40	4
Greater than 2 inches but less than 3 inches	45	7

403-4.2 Asphalt plant. Plants used for the preparation of asphalt shall conform to the requirements of American Association of State Highway and Transportation Officials (AASHTO) M156 including the following items:

a. Inspection of plant. The RPR, or RPR's authorized representative, shall have access, at all times, to all areas of the plant for checking adequacy of equipment; inspecting operation of the plant: verifying weights, proportions, and material properties; and checking the temperatures maintained in the preparation of the mixtures.

b. Storage bins and surge bins. The asphalt mixture stored in storage and/or surge bins shall meet the same requirements as asphalt mixture loaded directly into trucks. Asphalt mixture shall not be stored in storage and/or surge bins for a period greater than twelve (12) hours. If the RPR determines there is an excessive heat loss, segregation or oxidation of the asphalt mixture due to temporary storage, temporary storage shall not be allowed.

403-4.3 Aggregate stockpile management. Aggregate stockpiles shall be constructed in such a manner that prevents segregation and intermixing of deleterious materials. Aggregates from different sources shall be stockpiled, weighed and batched separately at the concrete batch plant. Aggregates that have become segregated or mixed with earth or foreign material shall not be used.

A continuous supply of materials shall be provided to the work to ensure continuous placement.

403-4.4 Hauling equipment. Trucks used for hauling asphalt shall have tight, clean, and smooth metal beds. To prevent the asphalt from sticking to the truck beds, the truck beds shall be lightly coated with a minimum amount of paraffin oil, lime solution, or other material approved by the RPR. Petroleum products shall not be used for coating truck beds. Each truck shall have a suitable cover to protect the mixture from adverse weather. When necessary, to ensure that the mixture will be delivered to the site at the specified temperature, truck beds shall be insulated or heated and covers shall be securely fastened.

403-4.4.1 Material transfer vehicle (MTV). Material transfer Vehicles shall be required due to the improvement in smoothness and decrease in both physical and thermal segregation. To transfer the material from the hauling equipment to the paver, use a self-propelled, material transfer vehicle with a swing conveyor that can deliver material to the paver without making contact with the paver. The MTV shall be able to move back and forth between the hauling equipment and the paver providing material transfer to the paver, while allowing the paver to operate at a constant speed. The Material Transfer Vehicle will have remixing and storage capability to prevent physical and thermal segregation.

403-4.5 Asphalt pavers. Asphalt pavers shall be self-propelled with an activated heated screed, capable of spreading and finishing courses of asphalt that will meet the specified thickness, smoothness, and grade. The paver shall have sufficient power to propel itself and the hauling equipment without adversely affecting the finished surface. The asphalt paver shall be equipped with a control system capable of automatically maintaining the specified screed grade and elevation.

If the spreading and finishing equipment in use leaves tracks or indented areas, or produces other blemishes in the pavement that are not satisfactorily corrected by the scheduled operations, the use of such equipment shall be discontinued.

The paver shall be capable of paving to a minimum width specified in paragraph 401-4.11.

403-4.6 Rollers. The number, type, and weight of rollers shall be sufficient to compact the asphalt to the required density while it is still in a workable condition without crushing of the aggregate, depressions or other damage to the pavement surface. Rollers shall be in good condition, capable of operating at slow speeds to avoid displacement of the asphalt. All rollers shall be specifically designed and suitable for compacting asphalt concrete and shall be properly used. Rollers that impair the stability of any layer of a pavement structure or underlying soils shall not be used.

403-4.6.1 Density device. The Contractor shall have on site a density gauge during all paving operations in order to assist in the determination of the optimum rolling pattern, type of roller and frequencies, as well as to monitor the effect of the rolling operations during production paving. The Contractor shall also supply a qualified technician during all paving operations to calibrate the density gauge and obtain accurate density readings for all new asphalt. These densities shall be supplied to the RPR upon request at any time during construction. No separate payment will be made for supplying the density gauge and technician.

403-4.7 Preparation of asphalt binder. The asphalt binder shall be heated in a manner that will avoid local overheating and provide a continuous supply of the asphalt material to the mixer at a uniform

temperature. The temperature of the unmodified asphalt binder delivered to the mixer shall be sufficient to provide a suitable viscosity for adequate coating of the aggregate particles, but shall not exceed 325°F when added to the aggregate. The temperature of modified asphalt binder shall be no more than 350°F when added to the aggregate.

403-4.8 Preparation of mineral aggregate. The aggregate for the asphalt shall be heated and dried. The maximum temperature and rate of heating shall be such that no damage occurs to the aggregates. The temperature of the aggregate and mineral filler shall not exceed 350°F when the asphalt binder is added. Particular care shall be taken that aggregates high in calcium or magnesium content are not damaged by overheating. The temperature shall not be lower than is required to obtain complete coating and uniform distribution on the aggregate particles and to provide a mixture of satisfactory workability.

403-4.9 Preparation of asphalt mixture. The aggregates and the asphalt binder shall be weighed or metered and introduced into the mixer in the amount specified by the JMF. The combined materials shall be mixed until the aggregate obtains a uniform coating of asphalt binder and is thoroughly distributed throughout the mixture. Wet mixing time shall be the shortest time that will produce a satisfactory mixture, but not less than 25 seconds for batch plants. The wet mixing time for all plants shall be established by the Contractor, based on the procedure for determining the percentage of coated particles described in ASTM D2489, for each individual plant and for each type of aggregate used. The wet mixing time will be set to achieve 95% of coated particles. For continuous mix plants, the minimum mixing time shall be determined by dividing the weight of its contents at operating level by the weight of the mixture delivered per second by the mixer. The moisture content of all asphalt upon discharge shall not exceed 0.5%.

403-4.10 Application of Prime and Tack Coat. Immediately before placing the asphalt mixture, the underlying course shall be cleaned of all dust and debris.

A prime coat in accordance with Item P-602 shall be applied to aggregate base prior to placing the asphalt mixture.

A tack coat shall be applied in accordance with Item P-603 to all vertical and horizontal asphalt and concrete surfaces prior to placement of the first and each subsequent lift of asphalt mixture.

403-4.11 Laydown plan, transporting, placing, and finishing. Prior to the placement of the asphalt, the Contractor shall prepare a laydown plan with the sequence of paving lanes and width to minimize the number of cold joints; the location of any temporary ramps; laydown temperature; and estimated time of completion for each portion of the work (milling, paving, rolling, cooling, etc.). The laydown plan and any modifications shall be approved by the RPR.

Deliveries shall be scheduled so that placing and compacting of asphalt is uniform with minimum stopping and starting of the paver. Hauling over freshly placed material shall not be permitted until the material has been compacted, as specified, and allowed to cool to approximately ambient temperature. The Contractor, at their expense, shall be responsible for repair of any damage to the pavement caused by hauling operations.

Contractor shall survey each lift of asphalt surface course and certify to RPR that every lot of each lift meets the grade tolerances of paragraph 401-6.2e before the next lift can be placed.

Edges of existing asphalt pavement abutting the new work shall be saw cut and the cut off material and laitance removed. Apply a tack coat in accordance with P-603 before new asphalt material is placed against it.

The speed of the paver shall be regulated to eliminate pulling and tearing of the asphalt mat. Placement of the asphalt mix shall begin along the centerline of a crowned section or on the high side of areas with a one way slope unless shown otherwise on the laydown plan as accepted by the RPR. The asphalt mix shall be placed in consecutive adjacent lanes having a minimum width of **15** feet except where edge lanes require less width to complete the area. Additional screed sections attached to widen the paver to meet the

minimum lane width requirements must include additional auger sections to move the asphalt mixture uniformly along the screed extension.

The longitudinal joint in one course shall offset the longitudinal joint in the course immediately below by at least 1 foot; however, the joint in the surface top course shall be at the centerline of crowned pavements. Transverse joints in one course shall be offset by at least 10 feet from transverse joints in the previous course. Transverse joints in adjacent lanes shall be offset a minimum of 10 feet. On areas where irregularities or unavoidable obstacles make the use of mechanical spreading and finishing equipment impractical, the asphalt may be spread and luted by hand tools.

The RPR may at any time, reject any batch of asphalt, on the truck or placed in the mat, which is rendered unfit for use due to contamination, segregation, incomplete coating of aggregate, or overheated asphalt mixture. Such rejection may be based on only visual inspection or temperature measurements. In the event of such rejection, the Contractor may take a representative sample of the rejected material in the presence of the RPR, and if it can be demonstrated in the laboratory, in the presence of the RPR, that such material was erroneously rejected, payment will be made for the material at the contract unit price.

Areas of segregation in the surface course, as determined by the RPR, shall be removed and replaced at the Contractor's expense. The area shall be removed by saw cutting and milling a minimum of the construction lift thickness as specified in paragraph 401-3.3, Table 2 for the approved mix design. The area to be removed and replaced shall be a minimum width of the paver and a minimum of 10 feet long.

403-4.12 Compaction of asphalt mixture. After placing, the asphalt mixture shall be thoroughly and uniformly compacted by self-propelled rollers. The surface shall be compacted as soon as possible when the asphalt has attained sufficient stability so that the rolling does not cause undue displacement, cracking or shoving. The sequence of rolling operations and the type of rollers used shall be at the discretion of the Contractor. The speed of the roller shall, at all times, be sufficiently slow to avoid displacement of the hot mixture and be effective in compaction. Any surface defects and/or displacement occurring as a result of the roller, or from any other cause, shall be corrected at the Contractor's expense.

Sufficient rollers shall be furnished to handle the output of the plant. Rolling shall continue until the surface is of uniform texture, true to grade and cross-section, and the required field density is obtained. To prevent adhesion of the asphalt to the roller, the wheels shall be equipped with a scraper and kept moistened with water as necessary.

In areas not accessible to the roller, the mixture shall be thoroughly compacted with approved power tampers.

Any asphalt that becomes loose and broken, mixed with dirt, contains check-cracking, or in any way defective shall be removed and replaced with fresh hot mixture and immediately compacted to conform to the surrounding area. This work shall be done at the Contractor's expense. Skin patching shall not be allowed**.**

403-4.13 Joints. The formation of all joints shall be made in such a manner as to ensure a continuous bond between the courses and obtain the required density. All joints shall have the same texture as other sections of the course and meet the requirements for smoothness and grade.

The roller shall not pass over the unprotected end of the freshly laid asphalt except when necessary to form a transverse joint. When necessary to form a transverse joint, it shall be made by means of placing a bulkhead or by tapering the course. The tapered edge shall be cut back to its full depth and width on a straight line to expose a vertical face prior to placing the adjacent lane. In both methods, all contact surfaces shall be coated with an asphalt tack coat before placing any fresh asphalt against the joint.

Longitudinal joints which are have been left exposed for more than four (4) hours; the surface temperature has cooled to less than 175°F; or are irregular, damaged, uncompacted or otherwise defective shall be cut back with a cutting wheel or pavement saw a maximum of 3 inches to expose a clean, sound, uniform

vertical surface for the full depth of the course. All cutback material and any laitance produced from cutting joints shall be removed from the project. An asphalt tack coat or other product approved by the RPR shall be applied to the clean, dry joint prior to placing any additional fresh asphalt against the joint. The cost of this work shall be considered incidental to the cost of the asphalt.

403-4.14 Saw-cut grooving. Saw-cut grooving is not required

403-4.15 Diamond grinding. Diamond grinding shall be completed prior to pavement grooving. Diamond grinding shall be accomplished by sawing with saw blades impregnated with industrial diamond abrasive.

Diamond grinding shall be performed with a machine designed specifically for diamond grinding capable of cutting a path at least 3 feet wide. The saw blades shall be 1/8-inch wide with a minimum of 55 to 60 blades per 12 inches of cutting head width; grooves between 0.090 and 0.130 inches wide; and peaks and ridges approximately 1/32 inch higher than the bottom of the grinding cut. The actual number of blades will be determined by the Contractor and depend on the hardness of the aggregate. Equipment or grinding procedures that causes ravels, aggregate fractures, spalls or disturbance to the pavement will not be permitted.

Grinding will be tapered in all directions to provide smooth transitions to areas not requiring grinding. The slurry resulting from the grinding operation shall be continuously removed and the pavement left in a clean condition. The Contractor shall apply a surface treatment per P-608 to all areas that have been subject to grinding.

403-4.16 Nighttime Paving Requirements. The Contractor shall provide adequate lighting during any nighttime construction. A lighting plan shall be submitted by the Contractor and approved by the RPR prior to the start of any nighttime work. All work shall be in accordance with the approved CSPP and lighting plan.

CONTRACTOR QUALITY CONTROL (CQC)

403-5.1 General. The Contractor shall develop a CQCP in accordance with Item C-100. No partial payment will be made for materials that are subject to specific QC requirements without an approved CQCP.

403-5.2 Contractor quality control (QC) facilities. The Contractor shall provide or contract for testing facilities in accordance with Item C-100. The RPR shall be permitted unrestricted access to inspect the Contractor's QC facilities and witness QC activities. The RPR will advise the Contractor in writing of any noted deficiencies concerning the QC facility, equipment, supplies, or testing personnel and procedures. When the deficiencies are serious enough to be adversely affecting the test results, the incorporation of the materials into the work shall be suspended immediately and will not be permitted to resume until the deficiencies are satisfactorily corrected.

403-5.3 Quality Control (QC) testing. The Contractor shall perform all QC tests necessary to control the production and construction processes applicable to these specifications and as set forth in the approved CQCP. The testing program shall include, but not necessarily be limited to, tests for the control of asphalt content, aggregate gradation, temperatures, aggregate moisture, field compaction, and surface smoothness. A QC Testing Plan shall be developed as part of the CQCP**.**

a. Asphalt content. A minimum of two tests shall be performed per day in accordance with ASTM D6307 or ASTM D2172 for determination of asphalt content. When using ASTM D6307, the correction factor shall be determined as part of the first test performed at the beginning of plant production; and as part of every tenth test performed thereafter. The asphalt content for the day will be determined by averaging the test results.

b. Gradation. Aggregate gradations shall be determined a minimum of twice per lot from mechanical analysis of extracted aggregate in accordance with ASTM D5444 and ASTM C136, and ASTM C117.

c. Moisture content of aggregate. The moisture content of aggregate used for production shall be determined a minimum of once per lot in accordance with ASTM C566.

d. Moisture content of asphalt. The moisture content of the asphalt shall be determined once per lot in accordance with AASHTO T329 or ASTM D1461.

e. Temperatures. Temperatures shall be checked, at least four times per lot, at necessary locations to determine the temperatures of the dryer, the asphalt binder in the storage tank, the asphalt at the plant, and the asphalt at the job site.

f. In-place density monitoring. The Contractor shall conduct any necessary testing to ensure that the specified density is being achieved. A nuclear gauge may be used to monitor the pavement density in accordance with ASTM D2950.

g. Smoothness for Contractor Quality Control.

The Contractor shall perform smoothness testing in transverse and longitudinal directions daily to verify that the construction processes are producing pavement with variances less than ¼ inch in 12 feet, identifying areas that may pond water which could lead to hydroplaning of aircraft. If the smoothness criteria is not met, appropriate changes and corrections to the construction process shall be made by the Contractor before construction continues

The Contractor may use a 12-foot straightedge, a rolling inclinometer meeting the requirements of ASTM E2133 or rolling external reference device that can simulate a 12-foot straightedge approved by the RPR. Straight-edge testing shall start with one-half the length of the straightedge at the edge of pavement section being tested and then moved ahead one-half the length of the straightedge for each successive measurement. Testing shall be continuous across all joints. The surface irregularity shall be determined by placing the freestanding (unleveled) straightedge on the pavement surface and allowing it to rest upon the two highest spots covered by its length, and measuring the maximum gap between the straightedge and the pavement surface in the area between the two high points. If the rolling inclinometer or external reference device is used, the data may be evaluated using the FAA profile program, ProFAA, using the 12-foot straightedge simulation function.

Smoothness readings shall not be made across grade changes or cross slope transitions. The transition between new and existing pavement shall be evaluated separately for conformance with the plans.

(1) Transverse measurements. Transverse measurements shall be taken for each day's production placed. Transverse measurements will be taken perpendicular to the pavement centerline each 50 feet or more often as determined by the RPR. The joint between lanes shall be tested separately to facilitate smoothness between lanes.

(2) Longitudinal measurements. Longitudinal measurements shall be taken for each day's production placed. Longitudinal tests will be parallel to the centerline of paving; at the center of paving lanes when widths of paving lanes are less than 20 feet; and at the third points of paving lanes when widths of paving lanes are 20 ft or greater.

Deviations on the final surface course in either the transverse or longitudinal direction that will trap water greater than 1/4 inch shall be corrected with diamond grinding per paragraph 403-4.15 or by removing and replacing the surface course to full depth. Grinding shall be tapered in all directions to provide smooth transitions to areas not requiring grinding. All areas in which diamond grinding has been performed shall be subject to the final pavement thickness tolerances specified in paragraph 401-6.1d(3) Areas that have been ground shall be sealed with a surface treatment in accordance with Item P-608. To avoid the surface treatment creating any conflict with runway or taxiway markings, it may be necessary to seal a larger area.

Control charts shall be kept to show area of each day's placement and the percentage of corrective grinding required. Corrections to production and placement shall be initiated when corrective grinding is required. If the Contractor's machines and/or methods produce significant areas that need corrective actions in excess of 10 percent of a day's production, production shall be stopped until corrective measures are implemented by the Contractor.

h. Grade. Grade shall be evaluated daily to allow adjustments to paving operations when grade measurements do not meet specifications. As a minimum, grade shall be evaluated prior to the placement of the first lift and then prior to and after placement of the surface lift.

Measurements will be taken at appropriate gradelines (as a minimum at center and edges of paving lane) and longitudinal spacing as shown on cross-sections and plans. The final surface of the pavement will not vary from the gradeline elevations and cross-sections shown on the plans by more than 1/2 inch vertically **and 0.1 feet laterally**. The documentation will be provided by the Contractor to the RPR **by the end of the following working day** .

Areas with humps or depressions that exceed grade or smoothness criteria and that retain water on the surface must be ground off provided the course thickness after grinding is not more than 1/2 inch less than the thickness specified on the plans. Grinding shall be in accordance with paragraph 403-4.15.

The Contractor shall repair low areas or areas that cannot be corrected by grinding by removal of deficient areas to the depth of the final course plus ½ inch and replacing with new material. Skin patching is not allowed.

403-5.4 Sampling. When directed by the RPR, the Contractor shall sample and test any material that appears inconsistent with similar material being sampled, unless such material is voluntarily removed and replaced or deficiencies corrected by the Contractor. All sampling shall be in accordance with standard procedures specified.

403-5.5 Control charts. The Contractor shall maintain linear control charts both for individual measurements and range (i.e., difference between highest and lowest measurements) for aggregate gradation, asphalt content, and VMA. The VMA for each day shall be calculated and monitored by the QC laboratory.

Control charts shall be posted in a location satisfactory to the RPR and kept current. As a minimum, the control charts shall identify the project number, the contract item number, the test number, each test parameter, the Action and Suspension Limits applicable to each test parameter, and the Contractor's test results. The Contractor shall use the control charts as part of a process control system for identifying potential problems and assignable causes before they occur. If the Contractor's projected data during production indicates a problem and the Contractor is not taking satisfactory corrective action, the RPR may suspend production or acceptance of the material.

a. Individual measurements. Control charts for individual measurements shall be established to maintain process control within tolerance for aggregate gradation, asphalt content, and VMA. The control charts shall use the JMF target values as indicators of central tendency for the following test parameters with associated Action and Suspension Limits:

Control Chart Limits for Individual Measurements

Sieve	Action Limit	Suspension Limit
3/4 inch	±6%	±9%
1/2 inch	±6%	±9%
3/8 inch	±6%	±9%
No. 4	±6%	±9%
No. 16	±5%	±7.5%
No. 50	±3%	±4.5%
No. 200	±2%	±3%
Asphalt Content	±0.45%	±0.70%
Minimum VMA	-0.5%	-1.0%

b. Range. Control charts for range shall be established to control process variability for the test parameters and Suspension Limits listed below. The range shall be computed for each lot as the difference between the two test results for each control parameter. The Suspension Limits specified below are based on a sample size of n = 2. Should the Contractor elect to perform more than two tests per lot, the Suspension Limits shall be adjusted by multiplying the Suspension Limit by 1.18 for n = 3 and by 1.27 for n = 4.

Control Chart Limits Based on Range
(n = 2)

Sieve	Suspension Limit
1/2 inch	11%
3/8 inch	11%
No. 4	11%
No. 16	9%
No. 50	6%
No. 200	3.5%
Asphalt Content	0.8%

c. Corrective action. The CQCP shall indicate that appropriate action shall be taken when the process is believed to be out of tolerance. The Plan shall contain sets of rules to gauge when a process is out of control and detail what action will be taken to bring the process into control. As a minimum, a process shall be deemed out of control and production stopped and corrective action taken, if:

(1) One point falls outside the Suspension Limit line for individual measurements or range; or

(2) Two points in a row fall outside the Action Limit line for individual measurements**.**

403-5.6 Quality control (QC) reports. The Contractor shall maintain records and shall submit reports of QC activities daily , in accordance with the CQCP described in Item C-100.

MATERIAL ACCEPTANCE

403-6.1. Quality Assurance Acceptance sampling and testing. Unless otherwise specified, all acceptance sampling and testing necessary to determine conformance with the requirements specified in this section

will be performed by the RPR at no cost to the Contractor except that coring as required in this section shall be completed and paid for by the Contractor.

a. Quality Assurance (QA) testing laboratory. The QA testing laboratory performing these acceptance tests will be accredited in accordance with ASTM D3666. The QA laboratory accreditation will be current and listed on the accrediting authority's website. All test methods required for acceptance sampling and testing will be listed on the lab accreditation.

b. Lot Size. A standard lot will be equal to one day's production divided into approximately equal sublots of between 400 to 600 tons. When only one or two sublots are produced in a day's production, the sublots will be combined with the production lot from the previous or next day.

Where more than one plant is simultaneously producing asphalt for the job, the lot sizes will apply separately for each plant.

c. Asphalt air voids. Plant-produced asphalt will be tested for air voids on a sublot basis.

(1) Sampling. Material from each sublot shall be sampled in accordance with ASTM D3665. Samples shall be taken from material deposited into trucks at the plant or at the job site in accordance with ASTM D979. The sample of asphalt may be put in a covered metal tin and placed in an oven for **not less than 30 minutes nor more than 60 minutes** to maintain the material at or above the compaction temperature as specified in the JMF. If absorptive aggregates are used, as determined by the Engineer, hold times are to be increased to not less than 60 minutes and not more than 90 minutes.

(2) Testing. Air voids will be determined for each sublot in accordance with ASTM D3203 for a set of compacted specimens prepared in accordance with **ASTM D6925**.

d. In-place asphalt mat and joint density. Each sublot will be tested for in-place mat and joint density as a percentage of the theoretical maximum density (TMD).

(1) Sampling. The **Contractor**will cut minimum 5 inches diameter samples in accordance with ASTM D5361. The Contractor shall furnish all tools, labor, and materials for cleaning, and filling the cored pavement. Laitance produced by the coring operation shall be removed immediately after coring, and core holes shall be filled within one day after sampling in a manner acceptable to the RPR.

(2) Bond. Each lift of asphalt shall be bonded to the underlying layer. If cores reveal that the surface is not bonded, additional cores shall be taken as directed by the RPR to determine the extent of unbonded areas. Unbonded areas shall be removed by milling and replaced at no additional cost as directed by the RPR.

(3) Thickness. Thickness of each lift of surface course will be evaluated by the RPR for compliance to the requirements shown on the plans after any necessary corrections for grade. Measurements of thickness will be made using the cores extracted for each sublot for density measurement. The maximum allowable deficiency at any point will not be more than 1/4 inch less than the thickness indicated for the lift. Average thickness of lift, or combined lifts, will not be less than the indicated thickness. Where the thickness tolerances are not met, the lot or sublot shall be corrected by the Contractor at his expense by removing the deficient area and replacing with new pavement. The Contractor, at his expense, may take additional cores as approved by the RPR to circumscribe the deficient area.

(4) Mat density. One core shall be taken from each sublot. Core locations will be determined by the RPR in accordance with ASTM D3665. Cores for mat density shall not be taken closer than one foot from a transverse or longitudinal joint. The bulk specific gravity of each cored sample will be determined in accordance with ASTM D2726. The percent compaction (density) of each sample will be determined by dividing the bulk specific gravity of each sublot sample by the TMD for that sublot.

(5) Joint density. One core centered over the longitudinal joint shall be taken for each sublot which contains a longitudinal joint. Core locations will be determined by the RPR in accordance with ASTM D3665. The bulk specific gravity of each core sample will be determined in accordance with ASTM D2726.

The percent compaction (density) of each sample will be determined by dividing the bulk specific gravity of each joint density sample by the average TMD for the lot. The TMD used to determine the joint density at joints formed between lots will be the lower of the average TMD values from the adjacent lots.

403-6.2 Acceptance criteria.

a. General. Acceptance will be based on the implementation of the Contractor Quality Control Program (CQCP) and the following characteristics of the asphalt and completed pavements: air voids, mat density, joint density, grade

b. Air voids. Acceptance of each lot of plant produced material for air voids will be based upon the average air void from the sublots. If the average air voids of the lot are equal to or greater than 2% and equal to or less than 5%, then the lot will be acceptable. If the average is below 2% or greater than 5%, the lot shall be removed and replaced at the Contractor's expense.

c. Mat density. Acceptance of each lot of plant produced material for mat density will be based on the average of all of the densities taken from the sublots. If the average mat density of the lot so established equals or exceeds 94%, the lot will be acceptable. If the average mat density of the lot is below 94%, the lot shall be removed and replaced at the Contractor's expense.

d. Joint density. Acceptance of each lot of plant produced asphalt for joint density will be based on the average of all of the joint densities taken from the sublots. If the average joint density of the lot so established equals or exceeds 92%, the lot will be acceptable. If the average joint density of the lot is less than 92%, the Contractor shall stop production and evaluate the method of compacting joints. Production may resume once the reason for poor compaction has been determined and appropriate measures have been taken to ensure proper compaction.

e. Grade. The final finished surface of the pavement of the completed project shall be surveyed to verify that the grade elevations and cross-sections shown on the plans do not deviate more than 1/2 inch vertically **or 0.1 feet laterally** .

Cross-sections of the pavement shall be taken at a minimum **50-foot** longitudinal spacing and at all longitudinal grade breaks. Minimum cross-section grade points shall include grade at centerline, **and at 50' offset intervals**.

The survey and documentation shall be stamped and signed by a licensed surveyor. Payment for sublots that do not meet grade for over 25% of the sublot shall not be more than 95%.

403-6.3 Resampling Pavement for Mat Density.

a. General. Resampling of a lot of pavement will only be allowed for mat density and then, only if the Contractor requests same in writing, within 48 hours after receiving the written test results from the RPR. A retest will consist of all the sampling and testing procedures contained in paragraphs 403-6.1. Only one resampling per lot will be permitted.

(1) A redefined mat density will be calculated for the resampled lot. The number of tests used to calculate the redefined mat density will include the initial tests made for that lot plus the retests.

(2) The cost for resampling and retesting shall be borne by the Contractor.

b. Payment for resampled lots. The redefined mat density for a resampled lot will be used to evaluate the acceptance of that lot in accordance with paragraph 403-6.2.

c. Outliers. Check for outliers in accordance with ASTM E178, at a significance level of 5%. Outliers will be discarded and density determined using the remaining test values.

METHOD OF MEASUREMENT

403-7.1 Measurement. Plant mix asphalt mix pavement shall be measured by the number of tons of asphalt pavement used in the accepted work. Recorded batch weights or truck scale weights will be used to determine the basis for the tonnage.

BASIS OF PAYMENT

403-8.1 Payment. Payment for a lot of asphalt mixture meeting all acceptance criteria as specified in paragraph 403-6.2 shall be made at the contract unit price per ton for asphalt. The price shall be compensation for furnishing all materials, for all preparation, mixing, and placing of these materials, and for all labor, equipment, tools, and incidentals necessary to complete the item.

Payment will be made under:

Item P-403-1 Optional Stabilized Base Course - per ton

REFERENCES

The publications listed below form a part of this specification to the extent referenced. The publications are referred to within the text by the basic designation only.

ASTM International (ASTM)

ASTM C29	Standard Test Method for Bulk Density ("Unit Weight") and Voids in Aggregate
ASTM C88	Standard Test Method for Soundness of Aggregates by Use of Sodium Sulfate or Magnesium Sulfate
ASTM C117	Standard Test Method for Materials Finer than 75-μm (No. 200) Sieve in Mineral Aggregates by Washing
ASTM C127	Standard Test Method for Density, Relative Density (Specific Gravity), and Absorption of Coarse Aggregate
ASTM C131	Standard Test Method for Resistance to Degradation of Small-Size Coarse Aggregate by Abrasion and Impact in the Los Angeles Machine
ASTM C136	Standard Test Method for Sieve or Screen Analysis of Fine and Coarse Aggregates
ASTM C142	Standard Test Method for Clay Lumps and Friable Particles in Aggregates
ASTM C183	Standard Practice for Sampling and the Amount of Testing of Hydraulic Cement
ASTM C566	Standard Test Method for Total Evaporable Moisture Content of Aggregate by Drying
ASTM D75	Standard Practice for Sampling Aggregates
ASTM D242	Standard Specification for Mineral Filler for Bituminous Paving Mixtures
ASTM D946	Standard Specification for Penetration-Graded Asphalt Cement for Use in Pavement Construction
ASTM D979	Standard Practice for Sampling Bituminous Paving Mixtures

ASTM D1073	Standard Specification for Fine Aggregate for Bituminous Paving Mixtures
ASTM D1074	Standard Test Method for Compressive Strength of Bituminous Mixtures
ASTM D1461	Standard Test Method for Moisture or Volatile Distillates in Bituminous Paving Mixtures
ASTM D2041	Standard Test Method for Theoretical Maximum Specific Gravity and Density of Bituminous Paving Mixtures
ASTM D2172	Standard Test Method for Quantitative Extraction of Bitumen from Bituminous Paving Mixtures
ASTM D2419	Standard Test Method for Sand Equivalent Value of Soils and Fine Aggregate
ASTM D2489	Standard Practice for Estimating Degree of Particle Coating of Bituminous-Aggregate Mixtures
ASTM D2726	Standard Test Method for Bulk Specific Gravity and Density of Non-Absorptive Compacted Bituminous Mixtures
ASTM D2950	Standard Test Method for Density of Bituminous Concrete in Place by Nuclear Methods
ASTM D3203	Standard Test Method for Percent Air Voids in Compacted Dense and Open Bituminous Paving Mixtures
ASTM D3381	Standard Specification for Viscosity-Graded Asphalt Cement for Use in Pavement Construction
ASTM D3665	Standard Practice for Random Sampling of Construction Materials
ASTM D3666	Standard Specification for Minimum Requirements for Agencies Testing and Inspecting Road and Paving Materials
ASTM D4125	Standard Test Methods for Asphalt Content of Bituminous mixtures by the Nuclear Method
ASTM D4318	Standard Test Methods for Liquid Limit, Plastic Limit, and Plasticity Index of Soils
ASTM D4552	Standard Practice for Classifying Hot-Mix Recycling Agents
ASTM D4791	Standard Test Method for Flat Particles, Elongated Particles, or Flat and Elongated Particles in Coarse Aggregate
ASTM D4867	Standard Test Method for Effect of Moisture on Asphalt Concrete Paving Mixtures
ASTM D5444	Standard Test Method for Mechanical Size Analysis of Extracted Aggregate
ASTM D5581	Standard Test Method for Resistance to Plastic Flow of Bituminous Mixtures Using Marshall Apparatus (6 inch-Diameter Specimen)
ASTM D5821	Standard Test Method for Determining the Percentage of Fractured Particles in Coarse Aggregate
ASTM D6307	Standard Test Method for Asphalt Content of Hot-Mix Asphalt by Ignition Method

ASTM D6373	Standard Specification for Performance Graded Asphalt Binder
ASTM D6752	Standard Test Method for Bulk Specific Gravity and Density of Compacted Bituminous Mixtures Using Automatic Vacuum Sealing Method
ASTM D6925	Standard Test Method for Preparation and Determination of the Relative Density of Hot Mix Asphalt (HMA) Specimens by Means of the SuperPave Gyratory Compactor
ASTM D6926	Standard Practice for Preparation of Bituminous Specimens Using Marshall Apparatus
ASTM D6927	Standard Test Method for Marshall Stability and Flow of Bituminous Mixtures
ASTM D6995	Standard Test Method for Determining Field VMA based on the Maximum Specific Gravity of the Mix (Gmm)
ASTM E11	Standard Specification for Woven Wire Test Sieve Cloth and Test Sieves
ASTM E178	Standard Practice for Dealing with Outlying Observations
ASTM E2133	Standard Test Method for Using a Rolling Inclinometer to Measure Longitudinal and Transverse Profiles of a Traveled Surface

American Association of State Highway and Transportation Officials (AASHTO)

AASHTO M156	Standard Specification for Requirements for Mixing Plants for Hot-Mixed, Hot-Laid Bituminous Paving Mixtures
AASHTO T329	Standard Method of Test for Moisture Content of Hot Mix Asphalt (HMA) by Oven Method
AASHTO T 340	Standard Method of Test for Determining the Rutting Susceptibility of Hot Mix Asphalt (APA) Using the Asphalt Pavement Analyzer (APA)

Asphalt Institute (AI)

MS-2	Mix Design Manual, 7th Edition
MS-26	Asphalt Binder Handbook AI State Binder Specification Database

FAA Orders

5300.1	Modifications to Agency Airport Design, Construction, and Equipment Standards

Federal Highway Administration (FHWA)

Long Term Pavement Performance Binder program

Software

FAARFIELD

END OF ITEM P-403

Item P-501

Cement Concrete Pavement

DESCRIPTION

501-1.1 This work shall consist of pavement composed of cement concrete with and without reinforcement constructed on a prepared underlying surface in accordance with these specifications and shall conform to the lines, grades, thickness, and typical cross-sections shown on the plans. The terms cement concrete, hydraulic cement concrete, and concrete are interchangeable in this specification.

MATERIALS

501-2.1 Aggregates.

a. Reactivity. Fine and Coarse aggregates to be used in PCC on this project shall be tested and evaluated by the Contractor for alkali-aggregate reactivity in accordance with both ASTM C1260 and ASTM C1567. Tests must be representative of aggregate sources which will be providing material for production. ASTM C1260 and ASTM C1567 tests may be run concurrently.

(1) Coarse aggregate and fine aggregate shall be tested separately in accordance with ASTM C1260, however, the length of test shall be extended to 28 days (30 days from casting). Tests must have been completed within 6 months of the date of the concrete mix submittal.

(2) The combined coarse and fine aggregate shall be tested in accordance with ASTM C1567, modified for combined aggregates, using the proposed mixture design proportions of aggregates, cementitious materials, and/or specific reactivity reducing chemicals. If the expansion does not exceed 0.10% at 28 days, the proposed combined materials will be accepted. If the expansion is greater than 0.10% at 28 days, the aggregates will not be accepted unless adjustments to the combined materials mixture can reduce the expansion to less than 0.10% at 28 days, or new aggregates shall be evaluated and tested.

(3) If lithium nitrate is proposed for use with or without supplementary cementitious materials, the aggregates shall be tested in accordance with Corps of Engineers (COE) Concrete Research Division (CRD) C662 in lieu of ASTM C1567. If lithium nitrate admixture is used, it shall be nominal 30% ±0.5% weight lithium nitrate in water. If the expansion does not exceed 0.10% at 28 days, the proposed combined materials will be accepted. If the expansion is greater than 0.10% at 28 days, the aggregates will not be accepted unless adjustments to the combined materials mixture can reduce the expansion to less than 0.10% at 28 days, or new aggregates shall be evaluated and tested.

b. Fine aggregate. Grading of the fine aggregate, as delivered to the mixer, shall conform to the requirements of ASTM C33 and the parameters identified in the fine aggregate material requirements below. Fine aggregate material requirements and deleterious limits are shown in the table below.

Fine Aggregate Material Requirements		
Soundness of Aggregates by Use of Sodium Sulfate **or** Magnesium Sulfate	Loss after 5 cycles: 10% maximum using Sodium sulfate - or - 15% maximum using magnesium sulfate	ASTM C88
Sand Equivalent	**[45]** minimum	ASTM D2419
Fineness Modulus (FM)	$2.50 \leq FM \leq 3.40$	ASTM C136
Limits for Deleterious Substances in Fine Aggregate for Concrete		
Clay lumps and friable particles	1.0% maximum	ASTM C142
Coal and lignite	0.5% using a medium with a density of Sp. Gr. of 2.0	ASTM C123
Total Deleterious Material	1.0% maximum	

c. Coarse aggregate. The maximum size coarse aggregate shall be **1 inch**.

Aggregates delivered to the mixer shall be clean, hard, uncoated aggregates consisting of crushed stone, crushed or uncrushed gravel, air-cooled iron blast furnace slag, crushed recycled concrete pavement, or a combination. The aggregates shall have no known history of detrimental pavement staining. Steel blast furnace slag shall not be permitted. Coarse aggregate material requirements and deleterious limits are shown in the table below; washing may be required to meet aggregate requirements.

Coarse Aggregate Material Requirements

Material Test	**Requirement**	**Standard**
Resistance to Degradation	Loss: 40% maximum	ASTM C131
Soundness of Aggregates by Use of Sodium Sulfate **or** Magnesium Sulfate	Loss after 5 cycles: 12% maximum using Sodium sulfate - or - 18% maximum using magnesium sulfate	ASTM C88
Flat, Elongated, or Flat and Elongated Particles	8% maximum, by weight, of flat, elongated, or flat and elongated particles at 5:1 for any size group coarser than 3/8 sieve [1]	ASTM D4791
Bulk density of slag [2]	Weigh not less than 70 pounds per cubic foot	ASTM C29

[1] A flat particle is one having a ratio of width to thickness greater than five (5); an elongated particle is one having a ratio of length to width greater than five (5).

[2] Only required if slag is specified.

The amount of deleterious material in the coarse aggregate shall not exceed the following limits:

Limits for Deleterious Substances in Coarse Aggregate

Deleterious material	**ASTM**	**Percentage by Mass**
Clay Lumps and friable particles	ASTM C142	1.0
Material finer than No. 200 sieve (75-μm)	ASTM C117	1.0[1]
Lightweight particles	ASTM C123 using a medium with a density of Sp. Gr. of 2.0	0.5
Chert[2] (less than 2.40 Sp Gr.)	ASTM C123 using a medium with a density of Sp. Gr. of 2.40)	1.0][3]
Total of all deleterious Material		3.0[1]

[1] The limit for material finer than 75-μm is allowed to be increased to 1.5% for crushed aggregates consisting of dust of fracture that is essentially free from clay or shale. Test results supporting acceptance of increasing limit to 1.5% with statement indicating material is dust of fracture must be submitted with Concrete mix. Acceptable techniques to characterizing these fines include methylene blue adsorption or X-ray diffraction analysis. The total of all deleterious materials increases up to 3.5%.

[2] Chert and aggregates with less than 2.4 specific gravity.

[3] The limit for chert may be increased to 1.0 percent by mass in areas subject to severe freeze and thaw.

d. Combined aggregate gradation. This specification is targeted for a combined aggregate gradation developed following the guidance presented in United States Air Force Engineering Technical Letter (ETL) 97-5: Proportioning Concrete Mixtures with Graded Aggregates for Rigid Airfield Pavements. Base the aggregate grading upon a combination of all the aggregates (coarse and fine) to be used for the mixture proportioning. Three aggregate sizes may be required to achieve an optimized combined gradation that will produce a workable concrete mixture for its intended use. Use aggregate gradations that produce concrete mixtures with well-graded or optimized aggregate combinations. The Contractor shall submit complete mixture information necessary to calculate the volumetric components of the mixture. The combined aggregate grading shall meet the following requirements:

(1) The materials selected and the proportions used shall be such that when the Coarseness Factor (CF) and the Workability Factor (WF) are plotted on a diagram as described in paragraph 501-2.1d(4) below, the point thus determined shall fall within the parallelogram described therein.

(2) The CF shall be determined from the following equation:

CF = (cumulative percent retained on the 3/8 in. sieve)(100) / (cumulative percent retained on the No. 8 sieve)

(3) The WF is defined as the percent passing the No. 8 sieve based on the combined gradation. However, WF shall be adjusted, upwards only, by 2.5 percentage points for each 94 pounds of cementitious material per cubic meter yard greater than 564 pounds per cubic yard.

(4) A diagram shall be plotted using a rectangular scale with WF on the Y-axis with units from 20 (bottom) to 45 (top), and with CF on the X-axis with units from 80 (left side) to 30 (right side). On this diagram a parallelogram shall be plotted with corners at the following coordinates (CF-75, WF-28), (CF-75, WF-40), (CF-45, WF-32.5), and (CF-45, WF-44.5). If the point determined by the intersection of the computed CF and WF does not fall within the above parallelogram, the grading of each size of aggregate used and the proportions selected shall be changed as necessary. The point determined by the plotting of the CF and WF may be adjusted during production ±3 WF and ±5 CF. Adjustments to gradation may not take the point outside of the parallelogram.

e. Contractors combined aggregate gradation. The Contractor shall submit their combined aggregate gradation using the following format:

Contractor's Combined Aggregate Gradation

Sieve Size	**Contractor's Concrete mix Gradation (Percent passing by weight)**
2 inch	*
1-1/2 inch	*
1 inch	*
3/4 inch	*
1/2 inch	*
3/8 inch	*
No. 4	*
No. 8	*
No. 16	*
No. 30	*
No. 50	*
No. 100	*

501-2.2 Cement. Cement shall conform to the requirements of ASTM **C150** Type **I or II**.

501-2.3 Cementitious materials.

a. Fly ash. Fly ash shall meet the requirements of ASTM C618, with the exception of loss of ignition, where the maximum shall be less than 6%. Fly ash shall have a Calcium Oxide (CaO) content of less than 15% and a total alkali content less than 3% per ASTM C311. The Contractor shall furnish the previous three most recent, consecutive ASTM C618 reports for each source of fly ash proposed in the concrete mix, and shall furnish each additional report as they become available during the project. The reports can be used for acceptance or the material may be tested independently by the Resident Project Representative (RPR).

b. Slag cement (ground granulated blast furnace (GGBF)). Slag cement shall conform to ASTM C989, Grade 100 or Grade 120. Slag cement shall be used only at a rate between 25% and 55% of the total cementitious material by mass.

c. Raw or calcined natural pozzolan. Natural pozzolan shall be raw or calcined and conform to ASTM C618, Class N, including the optional requirements for uniformity and effectiveness in controlling Alkali-Silica reaction and shall have a loss on ignition not exceeding 6%. Class N pozzolan for use in mitigating Alkali-Silica Reactivity shall have a total available alkali content less than 3%.

d. Ultrafine fly ash and ultrafine pozzolan. UltraFine Fly Ash (UFFA) and UltraFine Pozzolan (UFP) shall conform to ASTM C618, Class F or N, and the following additional requirements:

(1) The strength activity index at 28 days of age shall be at least 95% of the control specimens.

(2) The average particle size shall not exceed 6 microns.

501-2.4 Joint seal. The joint seal for the joints in the concrete pavement shall meet the requirements of Item P-604 **or** Item P-605 and shall be of the type specified in the plans.

501-2.5 Isolation joint filler. Premolded joint filler for isolation joints shall conform to the requirements of ASTM D1751 or ASTM D1752 and shall be where shown on the plans. The filler for each joint shall be furnished in a single piece for the full depth and width required for the joint, unless otherwise specified by the RPR. When the use of more than one piece is required for a joint, the abutting ends shall be fastened securely and held accurately to shape by stapling or other positive fastening means satisfactory to the RPR.

501-2.6 Steel reinforcement. Reinforcing shall consist of **welded wire fabric in flat sheets only** conforming to the requirements of ASTM **A1064**.

501-2.7 Dowel and tie bars. Dowel bars shall be plain steel bars conforming to ASTM A615 and shall be free from burring or other deformation restricting slippage in the concrete.

a. Dowel Bars. Before delivery to the construction site each dowel bar shall be epoxy coated per ASTM A1078, Type 1, with a coating thickness after curing greater than 10 mils. Patched ends are not required for Type 1 coated dowels. The dowels shall be coated with a bond-breaker recommended by the manufacturer. Dowel sleeves or inserts are not permitted. Grout retention rings shall be fully circular metal or plastic devices capable of supporting the dowel until the grout hardens.

b. Tie Bars. Tie bars shall be deformed steel bars and conform to the requirements of ASTM A615. Tie bars designated as Grade 60 in ASTM A615 or ASTM A706 shall be used for construction requiring bent bars.

501-2.8 Water. Water used in mixing or curing shall be potable. If water is taken from other sources considered non-potable, it shall meet the requirements of ASTM C1602.

501-2.9 Material for curing concrete. Curing materials shall conform to one of the following specifications:

a. Liquid membrane-forming compounds for curing concrete shall conform to the requirements of ASTM C309, Type 2, Class A, or Class B.

b. White polyethylene film for curing concrete shall conform to the requirements of ASTM C171.

c. White burlap-polyethylene sheeting for curing concrete shall conform to the requirements of ASTM C171.

d. Waterproof paper for curing concrete shall conform to the requirements of ASTM C171.

501-2.10 Admixtures. Admixtures shall conform to the following specifications:

a. Air-entraining admixtures. Air-entraining admixtures shall meet the requirements of ASTM C260 and shall consistently entrain the air content in the specified ranges under field conditions. The air-entraining agent and any water reducer admixture shall be compatible.

b. Water-reducing admixtures. Water-reducing admixture shall meet the requirements of ASTM C494, Type A, B, or D.

c. Other admixtures. The use of set retarding and set-accelerating admixtures shall be approved by the RPR prior to developing the concrete mix. Retarding admixtures shall meet the requirements of ASTM C494, Type A, B, or D and set-accelerating admixtures shall meet the requirements of ASTM C494, Type C. Calcium chloride and admixtures containing calcium chloride shall not be used.

d. Lithium Nitrate. The lithium admixture shall be a nominal 30% aqueous solution of Lithium Nitrate, with a density of 10 pounds/gallon, and shall have the approximate chemical form as shown below:

Lithium Admixture

Constituent	Limit (Percent by Mass)
LiNO3 (Lithium Nitrate)	30 ±0.5
SO4 (Sulfate Ion)	0.1 (max)
Cl (Chloride Ion)	0.2 (max)
Na (Sodium Ion)	0.1 (max)
K (Potassium Ion)	0.1 (max)

The lithium nitrate admixture dispensing and mixing operations shall be verified and certified by the lithium manufacturer's representative.

501-2.11 Epoxy-resin. All epoxy-resin materials shall be two-component materials conforming to the requirements of ASTM C881, Class as appropriate for each application temperature to be encountered, except that in addition, the materials shall meet the following requirements:

a. Material for use for embedding dowels and anchor bolts shall be Type IV, Grade 3.

b. Material for use as patching materials for complete filling of spalls and other voids and for use in preparing epoxy resin mortar shall be Type III, Grade as approved.

c. Material for use for injecting cracks shall be Type IV, Grade 1.

d. Material for bonding freshly mixed Portland cement concrete or mortar or freshly mixed epoxy resin concrete or mortar to hardened concrete shall be Type V, Grade as approved.

501-2.12 Bond Breaker. When placed over a lean concrete base (P-306), one of the following bond breakers will be used:

a) **Choke stone shall be an ASTM C33 Number 89 stone.**

b) **Fabric shall meet the requirements of AASHTO M 288 Class I fabric with elongation less than 50% at the specified strengths. A certificate of compliance (COC) shall be provided by the fabric manufacturer that the material may be used as a bond breaker.**

c) **Liquid membrane forming compound shall be in accordance with paragraph 501-2.9.**

CONCRETE MIX

501-3.1. General. No concrete shall be placed until an acceptable concrete mix has been submitted to the RPR for review and the RPR has taken appropriate action. The RPR's review shall not relieve the Contractor of the responsibility to select and proportion the materials to comply with this section.

501-3.2 Concrete Mix Laboratory. The laboratory used to develop the concrete mix shall be accredited in accordance with ASTM C1077. The laboratory accreditation must be current and listed on the accrediting authority's website. All test methods required for developing the concrete mix must be included in the lab accreditation. A copy of the laboratory's current accreditation and accredited test methods shall be submitted to the RPR prior to start of construction.

501-3.3 Concrete Mix Proportions. Develop the mix using the procedures contained in Portland Cement Association (PCA) publication, "Design and Control of Concrete Mixtures." Concrete shall be proportioned to achieve a 28-day flexural strength that meets or exceeds the acceptance criteria contained in paragraph 501-6.6 for a flexural strength of **650** psi per ASTM C78.

The minimum cementitious material shall be adequate to ensure a workable, durable mix. The minimum cementitious material (cement plus fly ash, or slag cement) shall be **517** pounds per cubic yard. The ratio of water to cementitious material, including free surface moisture on the aggregates but not including moisture absorbed by the aggregates shall be between 0.38 – 0.45 by weight.

Flexural strength test specimens shall be prepared in accordance with ASTM C192 and tested in accordance with ASTM C78. At the start of the project, the Contractor shall determine an allowable slump as determined by ASTM C143 not to exceed 2 inches for slip-form placement. For fixed-form placement, the slump shall not exceed 3 inches. For hand placement, the slump shall not exceed 4 inches.

The results of the concrete mix shall include a statement giving the maximum nominal coarse aggregate size and the weights and volumes of each ingredient proportioned on a one cubic yard basis. Aggregate quantities shall be based on the mass in a saturated surface dry condition.

If a change in source(s) is made, or admixtures added or deleted from the mix, a new concrete mix must be submitted to the RPR for approval.

The RPR may request samples at any time for testing, prior to and during production, to verify the quality of the materials and to ensure conformance with the applicable specifications.

501-3.4 Concrete Mix submittal. The concrete mix shall be submitted to the RPR at least **30** days prior to the start of operations. The submitted concrete mix shall not be more than 180 days old and must use the materials to be used for production for the project. Production shall not begin until the concrete mix is approved in writing by the RPR.

Each of the submitted concrete mixes (i.e, slip form, side form machine finish and side form hand finish) shall be stamped or sealed by the responsible professional Engineer of the laboratory and shall include the following items and quantities as a minimum:

- Certified material test reports for aggregate in accordance with paragraph 501-2.1. Certified reports must include all tests required; reporting each test, test method, test result, and requirement specified (criteria).
- Combined aggregate gradations and analysis; and including plots of the fine aggregate fineness modulus.
- Reactivity Test Results.
- Coarse aggregate quality test results, including deleterious materials.
- Fine aggregate quality test results, including deleterious materials.
- Mill certificates for cement and supplemental cementitious materials.
- Certified test results for all admixtures, including Lithium Nitrate if applicable.
- Specified flexural strength, slump, and air content.
- Recommended proportions/volumes for proposed mixture and trial water-cementitious materials ratio, including actual slump and air content.
- Flexural and compressive strength summaries and plots, including all individual beam and cylinder breaks.
- Correlation ratios for acceptance testing and Contractor QC testing, when applicable.
- Historical record of test results documenting production standard deviation, when applicable.

501-3.5 Cementitious materials.

a. Fly ash. When fly ash is used as a partial replacement for cement, the replacement rate shall be determined from laboratory trial mixes, and shall be between 20 and 30% by weight of the total cementitious material. If fly ash is used in conjunction with slag cement the maximum replacement rate shall not exceed 10% by weight of total cementitious material.

b. Slag cement (ground granulated blast furnace (GGBF)). Slag cement may be used. The slag cement, or slag cement plus fly ash if both are used, may constitute between 25 to 55% of the total cementitious material by weight.

c. Raw or calcined natural pozzolan. Natural pozzolan may be used in the concrete mix. When pozzolan is used as a partial replacement for cement, the replacement rate shall be determined from laboratory trial mixes, and shall be between 20 and 30% by weight of the total cementitious material. If pozzolan is used in conjunction with slag cement the maximum replacement rate shall not exceed 10% by weight of total cementitious material.

d. Ultrafine fly ash (UFFA) and ultrafine pozzolan (UFP). UFFA and UFP may be used in the concrete mix with the RPR's approval. When UFFA and UFP is used as a partial replacement for cement, the replacement rate shall be determined from laboratory trial mixes, and shall be between 7% and 16% by weight of the total cementitious material.

501-3.6 Admixtures.

a. Air-entraining admixtures. Air-entraining admixture are to be added in such a manner that will ensure uniform distribution of the agent throughout the batch. The air content of freshly mixed air-entrained concrete shall be based upon trial mixes with the materials to be used in the work adjusted to produce concrete of the required plasticity and workability. The percentage of air in the mix shall be **6%**. Air content shall be determined by testing in accordance with ASTM C231 for gravel and stone coarse aggregate and ASTM C173 for slag and other highly porous coarse aggregate.

b. Water-reducing admixtures. Water-reducing admixtures shall be added to the mix in the manner recommended by the manufacturer and in the amount necessary to comply with the specification requirements. Tests shall be conducted with the materials to be used in the work, in accordance with ASTM C494.

c. Other admixtures. Set controlling, and other approved admixtures shall be added to the mix in the manner recommended by the manufacturer and in the amount necessary to comply with the specification requirements. Tests shall be conducted with the materials to be used in the work, in accordance with ASTM C494.

d. Lithium nitrate. Lithium nitrate shall be added to the mix in the manner recommended by the manufacturer and in the amount necessary to comply with the specification requirements in accordance with paragraph 501-2.10d.

CONSTRUCTION METHODS

501-4.1 Control Strip. The control strip(s) shall be to the next planned joint after the initial 250 feet of each type of pavement construction (slip-form pilot lane, slip-form fill-in lane, or fixed form). The Contractor shall demonstrate, in the presence of the RPR, that the materials, concrete mix, equipment, construction processes, and quality control processes meet the requirements of the specifications. The concrete mixture shall be extruded from the paver meeting the edge slump tolerance and with little or no finishing. Pilot, fill-in, and fixed-form control strips will be accepted separately. Minor adjustments to the mix design may be required to place an acceptable control strip. The production mix will be the adjusted mix design used to place the acceptable control strip. Upon acceptance of the control strip by the RPR, the Contractor must use the same equipment, materials, and construction methods for the remainder of concrete

paving. Any adjustments to processes or materials must be approved in advance by the RPR. The acceptable control strip shall be paid for in accordance with paragraph 501-6.6.

501-4.2 Equipment. The Contractor is responsible for the proper operation and maintenance of all equipment necessary for handling materials and performing all parts of the work to meet this specification.

a. Plant and equipment. The plant and mixing equipment shall conform to the requirements of ASTM C94 and/or ASTM C685. Each truck mixer shall have attached in a prominent place a manufacturer's nameplate showing the capacity of the drum in terms of volume of mixed concrete and the speed of rotation of the mixing drum or blades. The truck mixers shall be examined daily for changes in condition due to accumulation of hard concrete or mortar or wear of blades. The pickup and throwover blades shall be replaced when they have worn down 3/4 inch or more. The Contractor shall have a copy of the manufacturer's design on hand showing dimensions and arrangement of blades in reference to original height and depth.

Equipment for transferring and spreading concrete from the transporting equipment to the paving lane in front of the finishing equipment shall be provided. The equipment shall be specially manufactured, self-propelled transfer equipment which will accept the concrete outside the paving lane and will spread it evenly across the paving lane in front of the paver and strike off the surface evenly to a depth which permits the paver to operate efficiently.

b. Finishing equipment.

(1) Slip-form. The standard method of constructing concrete pavements shall be with an approved slip-form paving equipment designed and operated to spread, consolidate, screed, and finish the freshly placed concrete in one complete pass of the machine so that the end result is a dense and homogeneous pavement which is achieved with a minimum of hand finishing. The paver-finisher shall be a heavy duty, self-propelled machine designed specifically for paving and finishing high quality concrete pavements.

(2) Fixed-form. On projects requiring less than **[** 10,000 cubic yards **]** of concrete pavement or irregular areas at locations inaccessible to slip-form paving equipment, concrete pavement may be placed with equipment specifically designed for placement and finishing using stationary side forms. Methods and equipment shall be reviewed and accepted by the RPR. Hand screeding and float finishing may only be used on small irregular areas as allowed by the RPR.

c. Vibrators. Vibrator shall be the internal type. The rate of vibration of each vibrating unit shall be sufficient to consolidate the pavement without segregation or voids. The number, spacing, and frequency shall be as necessary to provide a dense and homogeneous pavement and meet the recommendations of American Concrete Institute (ACI) 309R, Guide for Consolidation of Concrete. Adequate power to operate all vibrators shall be available on the paver. The vibrators shall be automatically controlled so that they shall be stopped as forward motion ceases. The Contractor shall provide an electronic or mechanical means to monitor vibrator status. The checks on vibrator status shall occur a minimum of two times per day or when requested by the RPR.

Hand held vibrators may only be used in irregular areas and shall meet the recommendations of ACI 309R, Guide for Consolidation of Concrete.

d. Concrete saws. The Contractor shall provide sawing equipment adequate in number of units and power to complete the sawing to the required dimensions. The Contractor shall provide at least one standby saw in good working order and a supply of saw blades at the site of the work at all times during sawing operations.

e. Fixed forms. Straight side fixed forms shall be made of steel and shall be furnished in sections not less than 10 feet in length. Forms shall be provided with adequate devices for secure settings so that when in place they will withstand, without visible spring or settlement, the impact and vibration of the consolidating and finishing equipment. Forms with battered top surfaces and bent, twisted or broken forms

shall not be used. Built-up forms shall not be used, except as approved by the RPR. The top face of the form shall not vary from a true plane more than 1/8 inch in 10 feet, and the upstanding leg shall not vary more than 1/4 inch. The forms shall contain provisions for locking the ends of abutting sections together tightly for secure setting. Wood forms may be used under special conditions, when approved by the RPR. The forms shall extend the full depth of the pavement section.

501-4.3 Form setting. Forms shall be set to line and grade as shown on the plans, sufficiently in advance of the concrete placement, to ensure continuous paving operation. Forms shall be set to withstand, without visible spring or settlement, the impact and vibration of the consolidating and finishing equipment. Forms shall be cleaned and oiled prior to the concrete placement.

501-4.4 Base surface preparation prior to placement. Any damage to the prepared base, subbase, and subgrade shall be corrected full depth by the Contractor prior to concrete placement. The underlying surface shall be entirely free of frost when concrete is placed. The prepared grade shall be moistened with water, without saturating, immediately ahead of concrete placement to prevent rapid loss of moisture from concrete. **Bond breaker shall be applied in accordance with 501-2.12 . 501-4.5 Handling, measuring, and batching material.** Aggregate stockpiles shall be constructed and managed in such a manner that prevents segregation and intermixing of deleterious materials. Aggregates from different sources shall be stockpiled, weighed and batched separately at the concrete batch plant. Aggregates that have become segregated or mixed with earth or foreign material shall not be used. All aggregates produced or handled by hydraulic methods, and washed aggregates, shall be stockpiled or binned for draining at least 12 hours before being batched. Store and maintain all aggregates at a uniform moisture content prior to use. A continuous supply of materials shall be provided to the work to ensure continuous placement.

501-4.6 Mixing concrete. The concrete may be mixed at the work site, in a central mix plant or in truck mixers. The mixer shall be of an approved type and capacity. Mixing time shall be measured from the time all materials are placed into the drum until the drum is emptied into the truck. All concrete shall be mixed and delivered to the site in accordance with the requirements of ASTM C94 or ASTM C685.

Mixed concrete from the central mixing plant shall be transported in truck mixers, truck agitators, or non-agitating trucks. The elapsed time from the addition of cementitious material to the mix until the concrete is discharged from the truck should not exceed **30** minutes when the concrete is hauled in non-agitating trucks, nor 90 minutes when the concrete is hauled in truck mixers or truck agitators. In no case shall the temperature of the concrete when placed exceed 90°F. Retempering concrete by adding water or by other means will not be permitted. With transit mixers additional water may be added to the batch materials and additional mixing performed to increase the slump to meet the specified requirements provided the addition of water is performed within 45 minutes after the initial mixing operations and provided the water/cementitious ratio specified is not exceeded.

501-4.7 Weather Limitations on mixing and placing. No concrete shall be mixed, placed, or finished when the natural light is insufficient, unless an adequate and approved artificial lighting system is operated.

a. Cold weather. Unless authorized in writing by the RPR, mixing and concreting operations shall be discontinued when a descending air temperature in the shade and away from artificial heat reaches 40°F and shall not be resumed until an ascending air temperature in the shade and away from artificial heat reaches 35°F.

The aggregate shall be free of ice, snow, and frozen lumps before entering the mixer. The temperature of the mixed concrete shall not be less than 50°F at the time of placement. Concrete shall not be placed on frozen material nor shall frozen aggregates be used in the concrete.

When concreting is authorized during cold weather, water and/or the aggregates may be heated to not more than 150°F. The apparatus used shall heat the mass uniformly and shall be arranged to preclude the possible occurrence of overheated areas which might be detrimental to the materials.

Curing during cold weather shall be in accordance with paragraph 501-4.13d.

b. Hot weather. During periods of hot weather when the maximum daily air temperature exceeds 85°F, the following precautions shall be taken.

The forms and/or the underlying surface shall be sprinkled with water immediately before placing the concrete. The concrete shall be placed at the coolest temperature practicable, and in no case shall the temperature of the concrete when placed exceed 90°F. The aggregates and/or mixing water shall be cooled as necessary to maintain the concrete temperature at or not more than the specified maximum.

The concrete placement shall be protected from exceeding an evaporation rate of 0.2 psf per hour. When conditions are such that problems with plastic cracking can be expected, and particularly if any plastic cracking begins to occur, the Contractor shall immediately take such additional measures as necessary to protect the concrete surface. If the Contractor's measures are not effective in preventing plastic cracking, paving operations shall be immediately stopped.

Curing during hot weather shall be in accordance with paragraph 501-4.13e.

c. Temperature management program. Prior to the start of paving operation for each day of paving, the Contractor shall provide the RPR with a Temperature Management Program for the concrete to be placed to assure that uncontrolled cracking is avoided. (Federal Highway Administration HIPERPAV 3 is one example of a temperature management program.) As a minimum, the program shall address the following items:

(1) Anticipated tensile strains in the fresh concrete as related to heating and cooling of the concrete material.

(2) Anticipated weather conditions such as ambient temperatures, wind velocity, and relative humidity; and anticipated evaporation rate using Figure 19-9, PCA, Design and Control of Concrete Mixtures.

(3) Anticipated timing of initial sawing of joint.

(4) Anticipated number and type of saws to be used.

d. **Rain.** The Contractor shall have available materials for the protection of the concrete during inclement weather. Such protective materials shall consist of rolled polyethylene sheeting at least 4 mils thick of sufficient length and width to cover the plastic concrete slab and any edges. The sheeting may be mounted on either the paver or a separate movable bridge from which it can be unrolled without dragging over the plastic concrete surface. When rain appears imminent, all paving operations shall stop and all available personnel shall begin covering the surface of the unhardened concrete with the protective covering.

501-4.8 Concrete Placement. At any point in concrete conveyance, the free vertical drop of the concrete from one point to another or to the underlying surface shall not exceed 3 feet. The finished concrete product must be dense and homogeneous, without segregation and conforming to the standards in this specification. Backhoes and grading equipment shall not be used to distribute the concrete in front of the paver. Front end loaders will not be used. All concrete shall be consolidated without voids or segregation, including under and around all load-transfer devices, joint assembly units, and other features embedded in the pavement. Hauling equipment or other mechanical equipment can be permitted on adjoining previously constructed pavement when the concrete strength reaches **a flexural strength of 550 psi** , based on the average of four field cured specimens per 2,000 cubic yards of concrete placed. The Contractor must determine that the above minimum strengths are adequate to protection the pavement from overloads due to the construction equipment proposed for the project.

The Contractor shall have available materials for the protection of the concrete during cold, hot and/or inclement weather in accordance with paragraph 501-4.7.

a. Slip-form construction. The concrete shall be distributed uniformly into final position by a self-propelled slip-form paver without delay. The alignment and elevation of the paver shall be regulated from outside reference lines established for this purpose. The paver shall vibrate the concrete for the full width and depth of the strip of pavement being placed and the vibration shall be adequate to provide a consistency of concrete that will stand normal to the surface with sharp well-defined edges. The sliding forms shall be rigidly held together laterally to prevent spreading of the forms. The plastic concrete shall be effectively consolidated by internal vibration with transverse vibrating units for the full width of the pavement and/or a series of equally placed longitudinal vibrating units. The space from the outer edge of the pavement to longitudinal unit shall not exceed 9 inches for slipform and at the end of the dowels for the fill-in lanes. The spacing of internal units shall be uniform and shall not exceed 18 inches.

The term internal vibration means vibrating units located within the specified thickness of pavement section.

The rate of vibration of each vibrating unit shall be sufficient to consolidate the pavement without, segregation, voids, or vibrator trails and the amplitude of vibration shall be sufficient to be perceptible on the surface of the concrete along the entire length of the vibrating unit and for a distance of at least one foot. The frequency of vibration or amplitude should be adjusted proportionately with the rate of travel to result in a uniform density and air content. The paving machine shall be equipped with a tachometer or other suitable device for measuring and indicating the actual frequency of vibrations.

The concrete shall be held at a uniform consistency. The slip-form paver shall be operated with as nearly a continuous forward movement as possible and all operations of mixing, delivering, and spreading concrete shall be coordinated to provide uniform progress with stopping and starting of the paver held to a minimum. If for any reason, it is necessary to stop the forward movement of the paver, the vibratory and tamping elements shall also be stopped immediately. No tractive force shall be applied to the machine, except that which is controlled from the machine.

When concrete is being placed adjacent to an existing pavement, that part of the equipment which is supported on the existing pavement shall be equipped with protective pads on crawler tracks or rubber-tired wheels on which the bearing surface is offset to run a sufficient distance from the edge of the pavement to avoid breaking the pavement edge.

Not more than 15% of the total free edge of each 500-foot segment of pavement, or fraction thereof, shall have an edge slump exceeding 1/4 inch, and none of the free edge of the pavement shall have an edge slump exceeding 3/8 inch. (The total free edge of 500 feet of pavement will be considered the cumulative total linear measurement of pavement edge originally constructed as nonadjacent to any existing pavement; that is, 500 feet of paving lane originally constructed as a separate lane will have 1,000 feet of free edge, 500 feet of fill-in lane will have no free edge, etc.). The area affected by the downward movement of the concrete along the pavement edge shall be limited to not more than 18 inches from the edge.

When excessive edge slump cannot be corrected before the concrete has hardened, the area with excessive edge slump will be removed the full width of the slip form lane and replaced at the expense of the Contractor as directed by the RPR.

b. Fixed-form construction. Forms shall be drilled in advance of being placed to line and grade to accommodate tie bars / dowel bars where these are specified.

Immediately in advance of placing concrete and after all subbase operations are completed, side forms shall be trued and maintained to the required line and grade for a distance sufficient to prevent delay in placing.

Side forms shall remain in place at least 12 hours after the concrete has been placed, and in all cases until the edge of the pavement no longer requires the protection of the forms. Curing compound shall be applied to the concrete immediately after the forms have been removed.

Side forms shall be thoroughly cleaned and coated with a release agent each time they are used and before concrete is placed against them.

Concrete shall be spread, screed, shaped and consolidated by one or more self-propelled machines. These machines shall uniformly distribute and consolidate concrete without segregation so that the completed pavement will conform to the required cross-section with a minimum of handwork.

The number and capacity of machines furnished shall be adequate to perform the work required at a rate equal to that of concrete delivery. The equipment must be specifically designed for placement and finishing using stationary side forms. Methods and equipment shall be reviewed and accepted by the RPR.

Concrete for the full paving width shall be effectively consolidated by internal vibrators. The rate of vibration of each vibrating unit shall be sufficient to consolidate the pavement without segregation, voids, or leaving vibrator trails.

Power to vibrators shall be connected so that vibration ceases when forward or backward motion of the machine is stopped.

c. Consolidation. Concrete shall be consolidated with the specified type of lane-spanning, gang-mounted, mechanical, immersion type vibrating equipment mounted in front of the paver, supplemented, in rare instances as specified, by hand-operated vibrators. The vibrators shall be inserted into the concrete to a depth that will provide the best full-depth consolidation but not closer to the underlying material than 2 inches. Vibrators shall not be used to transport or spread the concrete. For each paving train, at least one additional vibrator spud, or sufficient parts for rapid replacement and repair of vibrators shall be maintained at the paving site at all times. Any evidence of inadequate consolidation (honeycomb along the edges, large air pockets, or any other evidence) or over-consolidation (vibrator trails, segregation, or any other evidence) shall require the immediate stopping of the paving operation and adjustment of the equipment or procedures as approved by the RPR.

If a lack of consolidation of the hardened concrete is suspected by the RPR, referee testing may be required. Referee testing of hardened concrete will be performed by the RPR by cutting cores from the finished pavement after a minimum of 24 hours curing. The RPR shall visually examine the cores for evidence of lack of consolidation. Density determinations will be made by the RPR based on the water content of the core as taken. ASTM C642 shall be used for the determination of core density in the saturated-surface dry condition. When required, referee cores will be taken at the minimum rate of one for each 500 cubic yards of pavement, or fraction. The Contractor shall be responsible for all referee testing cost if they fail to meet the required density.

The average density of the cores shall be at least 97% of the original concrete mix density, with no cores having a density of less than 96% of the original concrete mix density. Failure to meet the referee tests will be considered evidence that the minimum requirements for vibration are inadequate for the job conditions. Additional vibrating units or other means of increasing the effect of vibration shall be employed so that the density of the hardened concrete conforms to the above requirements.

501-4.9 Strike-off of concrete and placement of reinforcement. Following the placing of the concrete, it shall be struck off to conform to the cross-section shown on the plans and to an elevation that when the concrete is properly consolidated and finished, the surface of the pavement shall be at the elevation shown on the plans. When reinforced concrete pavement is placed in two layers, the bottom layer shall be struck off to such length and depth that the sheet of reinforcing steel fabric or bar mat may be laid full length on the concrete in its final position without further manipulation. The reinforcement shall then be placed directly upon the concrete, after which the top layer of the concrete shall be placed, struck off, and screed. If any portion of the bottom layer of concrete has been placed more than 30 minutes without being covered with the top layer or if initial set has taken place, it shall be removed and replaced with freshly mixed concrete at the Contractor's expense. When reinforced concrete is placed in one layer, the reinforcement

may be positioned in advance of concrete placement or it may be placed in plastic concrete by mechanical or vibratory means after spreading.

Reinforcing steel, at the time concrete is placed, shall be free of mud, oil, or other organic matter that may adversely affect or reduce bond. Reinforcing steel with rust, mill scale or a combination of both will be considered satisfactory, provided the minimum dimensions, weight, and tensile properties of a hand wire-brushed test specimen are not less than the applicable ASTM specification requirements.

501-4.10 Joints. Joints shall be constructed as shown on the plans and in accordance with these requirements. All joints shall be constructed with their faces perpendicular to the surface of the pavement and finished or edged as shown on the plans. Joints shall not vary more than 1/2-inch from their designated position and shall be true to line with not more than 1/4-inch variation in 10 feet. The surface across the joints shall be tested with a 12-foot straightedge as the joints are finished and any irregularities in excess of 1/4 inch shall be corrected before the concrete has hardened. All joints shall be so prepared, finished, or cut to provide a groove of uniform width and depth as shown on the plans.

a. Construction. Longitudinal construction joints shall be slip-formed or formed against side forms as shown in the plans.

Transverse construction joints shall be installed at the end of each day's placing operations and at any other points within a paving lane when concrete placement is interrupted for more than 30 minutes or it appears that the concrete will obtain its initial set before fresh concrete arrives. The installation of the joint shall be located at a planned contraction or expansion joint. If placing of the concrete is stopped, the Contractor shall remove the excess concrete back to the previous planned joint.

b. Contraction. Contraction joints shall be installed at the locations and spacing as shown on the plans. Contraction joints shall be installed to the dimensions required by forming a groove or cleft in the top of the slab while the concrete is still plastic or by sawing a groove into the concrete surface after the concrete has hardened. When the groove is formed in plastic concrete the sides of the grooves shall be finished even and smooth with an edging tool. If an insert material is used, the installation and edge finish shall be according to the manufacturer's instructions. The groove shall be finished or cut clean so that spalling will be avoided at intersections with other joints. Grooving or sawing shall produce a slot at least 1/8 inch wide and to the depth shown on the plans.

c. Isolation (expansion). Isolation joints shall be installed as shown on the plans. The premolded filler of the thickness as shown on the plans, shall extend for the full depth and width of the slab at the joint. The filler shall be fastened uniformly along the hardened joint face with no buckling or debris between the filler and the concrete interface, including a temporary filler for the sealant reservoir at the top of the slab. The edges of the joint shall be finished and tooled while the concrete is still plastic

d. Dowels and Tie Bars for Joints

(1) Tie bars. Tie bars shall consist of deformed bars installed in joints as shown on the plans. Tie bars shall be placed at right angles to the centerline of the concrete slab and shall be spaced at intervals shown on the plans. They shall be held in position parallel to the pavement surface and in the middle of the slab depth and within the tolerances in paragraph 501-4.10(f.). When tie bars extend into an unpaved lane, they may be bent against the form at longitudinal construction joints, unless threaded bolt or other assembled tie bars are specified. Tie bars shall not be painted, greased, or enclosed in sleeves. When slip-form operations call for tie bars, two-piece hook bolts can be installed.

(2) Dowel bars. Dowel bars shall be placed across joints in the proper horizontal and vertical alignment as shown on the plans. The dowels shall be coated with a bond-breaker or other lubricant recommended by the manufacturer and approved by the RPR. Dowels bars at longitudinal construction joints shall be bonded in drilled holes.

(3) Placing dowels and tie bars. Horizontal spacing of dowels shall be within a tolerance of ±3/4 inch. The vertical location on the face of the slab shall be within a tolerance of ±1/2 inch. The method used to install dowels shall ensure that the horizontal and vertical alignment will not be greater than 1/4 inch per feet, except for those across the crown or other grade change joints. Dowels across crowns and other joints at grade changes shall be measured to a level surface. Horizontal alignment shall be checked perpendicular to the joint edge. The portion of each dowel intended to move within the concrete or expansion cap shall be wiped clean and coated with a thin, even film of lubricating oil or light grease before the concrete is placed. Dowels shall be installed as specified in the following subparagraphs.

(a) Contraction joints. Dowels and tie bars in longitudinal and transverse contraction joints within the paving lane shall be held securely in place by means of rigid metal frames or basket assemblies of an approved type. The basket assemblies shall be held securely in the proper location by means of suitable pins or anchors. Do not cut or crimp the dowel basket tie wires.

At the Contractor's option, dowels and tie bars in contraction joints may be installed by insertion into the plastic concrete using approved equipment and procedures per the paver manufacturer's design. Approval of installation methods will be based on the results of the control strip showing that the dowels and tie bars are installed within specified tolerances as verified by cores or non-destructive rebar location devices approved by the RPR.

(b) Construction joints. Install dowels and tie bars by the cast-in- place or the drill-and-dowel method. Installation by removing and replacing in preformed holes will not be permitted. Dowels and tie bars shall be prepared and placed across joints where indicated, correctly aligned, and securely held in the proper horizontal and vertical position during placing and finishing operations, by means of devices fastened to the forms.

(c) Joints in hardened concrete. Install dowels in hardened concrete by bonding the dowels into holes drilled into the concrete. The concrete shall have cured for seven (7) days or reached a minimum **flexural strength of 450 psi** before drilling begins. Holes 1/8 inch greater in diameter than the dowels shall be drilled into the hardened concrete using rotary-core drills. Rotary-percussion drills may be used, provided that excessive spalling does not occur. Spalling beyond the limits of the grout retention ring will require modification of the equipment and operation. Depth of dowel hole shall be within a tolerance of ±1/2 inch of the dimension shown on the drawings. On completion of the drilling operation, the dowel hole shall be blown out with oil-free, compressed air. Dowels shall be bonded in the drilled holes using epoxy resin. Epoxy resin shall be injected at the back of the hole before installing the dowel and extruded to the collar during insertion of the dowel so as to completely fill the void around the dowel. Application by buttering the dowel will not be permitted. The dowels shall be held in alignment at the collar of the hole by means of a suitable metal or plastic grout retention ring fitted around the dowel.

e. Sawing of joints. Sawing shall commence, without regard to day or night, as soon as the concrete has hardened sufficiently to permit cutting without chipping, spalling, or tearing and before uncontrolled shrinkage cracking of the pavement occurs and shall continue without interruption until all joints have been sawn. All slurry and debris produced in the sawing of joints shall be removed by vacuuming and washing. Curing compound or system shall be reapplied in the initial saw-cut and maintained for the remaining cure period.

Joints shall be cut in locations as shown on the plans. The initial joint cut shall be a minimum 1/8 inch wide and to the depth shown on the plans. Prior to placement of joint sealant or seals, the top of the joint shall be widened by sawing as shown on the plans.

501-4.11 Finishing. Finishing operations shall be a continuing part of placing operations starting immediately behind the strike-off of the paver. Initial finishing shall be provided by the transverse screed or extrusion plate. The sequence of operations shall be transverse finishing, longitudinal machine floating if used, straightedge finishing, edging of joints, and then texturing. Finishing shall be by the machine method. The hand method shall be used only on isolated areas of odd slab widths or shapes and in the event

of a breakdown of the mechanical finishing equipment. Supplemental hand finishing for machine finished pavement shall be kept to an absolute minimum. Any machine finishing operation which requires appreciable hand finishing, other than a moderate amount of straightedge finishing, shall be immediately stopped and proper adjustments made or the equipment replaced. Equipment, mixture, and/or procedures which produce more than 1/4 inch of mortar-rich surface shall be immediately modified as necessary to eliminate this condition or operations shall cease. Compensation shall be made for surging behind the screeds or extrusion plate and settlement during hardening and care shall be taken to ensure that paving and finishing machines are properly adjusted so that the finished surface of the concrete (not just the cutting edges of the screeds) will be at the required line and grade. Finishing equipment and tools shall be maintained clean and in an approved condition. At no time shall water be added to the surface of the slab with the finishing equipment or tools, or in any other way. Fog (mist) sprays or other surface applied finishing aids specified to prevent plastic shrinkage cracking, approved by the RPR, may be used in accordance with the manufacturers requirements.

a. Machine finishing with slipform pavers. The slipform paver shall be operated so that only a very minimum of additional finishing work is required to produce pavement surfaces and edges meeting the specified tolerances. Any equipment or procedure that fails to meet these specified requirements shall immediately be replaced or modified as necessary. A self-propelled non-rotating pipe float may be used while the concrete is still plastic, to remove minor irregularities and score marks. Only one pass of the pipe float shall be allowed. Equipment, mixture, and/or procedures which produce more than 1/4 inch of mortar-rich surface shall be immediately modified as necessary to eliminate this condition or operations shall cease. Remove excessive slurry from the surface with a cutting straightedge and wipe off the edge. Any slurry which does run down the vertical edges shall be immediately removed by hand, using stiff brushes or scrapers. No slurry, concrete or concrete mortar shall be used to build up along the edges of the pavement to compensate for excessive edge slump, either while the concrete is plastic or after it hardens.

b. Machine finishing with fixed forms. The machine shall be designed to straddle the forms and shall be operated to screed and consolidate the concrete. Machines that cause displacement of the forms shall be replaced. The machine shall make only one pass over each area of pavement. If the equipment and procedures do not produce a surface of uniform texture, true to grade, in one pass, the operation shall be immediately stopped and the equipment, mixture, and procedures adjusted as necessary.

c. Other types of finishing equipment. Clary screeds, other rotating tube floats, or bridge deck finishers are not allowed on mainline paving, but may be allowed on irregular or odd-shaped slabs, and near buildings or trench drains, subject to the RPR's approval.

Bridge deck finishers shall have a minimum operating weight of 7500 pounds and shall have a transversely operating carriage containing a knock-down auger and a minimum of two immersion vibrators. Vibrating screeds or pans shall be used only for isolated slabs where hand finishing is permitted as specified, and only where specifically approved.

d. Hand finishing. Hand finishing methods will not be permitted, except under the following conditions: (1) in the event of breakdown of the mechanical equipment, hand methods may be used to finish the concrete already deposited on the grade and (2) in areas of narrow widths or of irregular dimensions where operation of the mechanical equipment is impractical.

e. Straightedge testing and surface correction. After the pavement has been struck off and while the concrete is still plastic, it shall be tested for trueness with a 12-foot finishing straightedge swung from handles capable of spanning at least one-half the width of the slab. The straightedge shall be held in contact with the surface in successive positions parallel to the centerline and the whole area gone over from one side of the slab to the other, as necessary. Advancing shall be in successive stages of not more than one-half the length of the straightedge. Any excess water and laitance in excess of 1/8 inch thick shall be removed from the surface of the pavement and wasted. Any depressions shall be immediately filled with freshly mixed concrete, struck off, consolidated, and refinished. High areas shall be cut down and

refinished. Special attention shall be given to assure that the surface across joints meets the smoothness requirements. Straightedge testing and surface corrections shall continue until the entire surface is found to be free from observable departures from the straightedge and until the slab conforms to the required grade and cross-section. The use of long-handled wood floats shall be confined to a minimum; they may be used only in emergencies and in areas not accessible to finishing equipment.

501-4.12 Surface texture. The surface of the pavement shall be finished as designated below for all newly constructed concrete pavements. It is important that the texturing equipment not tear or unduly roughen the pavement surface during the operation. The texture shall be uniform in appearance and approximately 1/16 inch in depth. Any imperfections resulting from the texturing operation shall be corrected to the satisfaction of the RPR.

a . Brush or broom finish. Shall be applied when the water sheen has practically disappeared. The equipment shall operate transversely across the pavement surface **.**

b. Burlap drag finish. Burlap, at least 15 ounces per square yard, will typically produce acceptable texture. To obtain a textured surface, the transverse threads of the burlap shall be removed approximately one foot from the trailing edge. A heavy buildup of grout on the burlap threads produces the desired wide sweeping longitudinal striations on the pavement surface **.**

c. Artificial turf finish. Shall be applied by dragging the surface of the pavement in the direction of concrete placement with an approved full-width drag made with artificial turf. The leading transverse edge of the artificial turf drag will be securely fastened to a lightweight pole on a traveling bridge. At least 2 feet of the artificial turf shall be in contact with the concrete surface during dragging operations. Approval of the artificial turf will be done only after it has been demonstrated by the Contractor to provide a satisfactory texture. One type that has provided satisfactory texture consists of 7,200 approximately 0.85-inch-long polyethylene turf blades per square foot.

501-4.13 Curing. Immediately after finishing operations are completed and bleed water is gone from the surface, all exposed surfaces of the newly placed concrete shall be cured for a 7-day cure period in accordance with one of the methods below. Failure to provide sufficient cover material of whatever kind the Contractor may elect to use, or lack of water to adequately take care of both curing and other requirements, shall be cause for immediate suspension of concreting operations. The concrete shall not be left exposed for more than 1/2 hour during the curing period.

When a two-saw-cut method is used to construct the contraction joint, the curing compound shall be applied to the saw-cut immediately after the initial cut has been made. The sealant reservoir shall not be sawed until after the curing period has been completed. When the one cut method is used to construct the contraction joint, the joint shall be cured with wet rope, wet rags, or wet blankets. The rags, ropes, or blankets shall be kept moist for the duration of the curing period.

a. Impervious membrane method. Curing with liquid membrane compounds should not occur until bleed and surface moisture has evaporated. All exposed surfaces of the pavement shall be sprayed uniformly with white pigmented curing compound immediately after the finishing of the surface and before the set of the concrete has taken place. The curing compound shall not be applied during rainfall. Curing compound shall be applied by mechanical sprayers under pressure at the rate of one gallon to not more than 150 square feet. The spraying equipment shall be of the fully atomizing type equipped with a tank agitator. At the time of use, the compound shall be in a thoroughly mixed condition with the pigment uniformly dispersed throughout the vehicle. During application, the compound shall be stirred continuously by mechanical means. Hand spraying of odd widths or shapes and concrete surfaces exposed by the removal of forms will be permitted. When hand spraying is approved by the RPR, a double application rate shall be used to ensure coverage. Should the film become damaged from any cause, including sawing operations, within the required curing period, the damaged portions shall be repaired immediately with additional compound or

other approved means. Upon removal of side forms, the sides of the exposed slabs shall be protected immediately to provide a curing treatment equal to that provided for the surface.

b. White burlap-polyethylene sheets. The surface of the pavement shall be entirely covered with the sheeting. The sheeting used shall be such length (or width) that it will extend at least twice the thickness of the pavement beyond the edges of the slab. The sheeting shall be placed so that the entire surface and both edges of the slab are completely covered. The sheeting shall be placed and weighted to remain in contact with the surface covered, and the covering shall be maintained fully saturated and in position for seven (7) days after the concrete has been placed.

c. Water method. The entire area shall be covered with burlap or other water absorbing material. The material shall be of sufficient thickness to retain water for adequate curing without excessive runoff. The material shall be kept wet at all times and maintained for seven (7) days. When the forms are stripped, the vertical walls shall also be kept moist. It shall be the responsibility of the Contractor to prevent ponding of the curing water on the subbase.

d. Concrete protection for cold weather. Maintain the concrete at a temperature of at least 50°F for a period of 72 hours after placing and at a temperature above freezing for the remainder of the 7-day curing period. The Contractor shall be responsible for the quality and strength of the concrete placed during cold weather; and any concrete damaged shall be removed and replaced at the Contractor's expense.

e. Concrete protection for hot weather. Concrete should be continuous moisture cured for the entire curing period and shall commence as soon as the surfaces are finished and continue for at least 24 hours. However, if moisture curing is not practical beyond 24 hours, the concrete surface shall be protected from drying with application of a liquid membrane-forming curing compound while the surfaces are still damp. Other curing methods may be approved by the RPR.

501-4.14 Removing forms. Unless otherwise specified, forms shall not be removed from freshly placed concrete until it has hardened sufficiently to permit removal without chipping, spalling, or tearing. After the forms have been removed, the sides of the slab shall be cured in accordance with paragraph 501-4.13.

If honeycombed areas are evident when the forms are removed, materials, placement, and consolidation methods must be reviewed and appropriate adjustments made to assure adequate consolidation at the edges of future concrete placements. Honeycombed areas that extend into the slab less than approximately 1 inch, shall be repaired with an approved grout, as directed by the RPR. Honeycombed areas that extend into the slab greater than a depth of 1 inch shall be considered as defective work and shall be removed and replaced in accordance with paragraph 501-4.19.

501-4.15 S**aw-cut grooving.** If shown on the plans, grooved surfaces shall be provided in accordance with the requirements of Item P-621.

501-4.16 Sealing joints. The joints in the pavement shall be sealed in accordance with Item **P-604 or P-605**.

501-4.17 Protection of pavement. The Contractor shall protect the pavement and its appurtenances against both public traffic and traffic caused by the Contractor's employees and agents until accepted by the RPR. This shall include watchmen to direct traffic and the erection and maintenance of warning signs, lights, pavement bridges, crossovers, and protection of unsealed joints from intrusion of foreign material, etc. Any damage to the pavement occurring prior to final acceptance shall be repaired or the pavement replaced at the Contractor's expense.

Aggregates, rubble, or other similar construction materials shall not be placed on airfield pavements. Traffic shall be excluded from the new pavement by erecting and maintaining barricades and signs until the concrete is at least seven (7) days old, or for a longer period if directed by the RPR.

In paving intermediate lanes between newly paved pilot lanes, operation of the hauling and paving equipment will be permitted on the new pavement after the pavement has been cured for seven (7) days,

the joints are protected, the concrete has attained a minimum field cured flexural strength of 450 psi, and the slab edge is protected.

All new and existing pavement carrying construction traffic or equipment shall be kept clean and spillage of concrete and other materials shall be cleaned up immediately.

Damaged pavements shall be removed and replaced at the Contractor's expense. Slabs shall be removed to the full depth, width, and length of the slab.

501-4.18 Opening to construction traffic. The pavement shall not be opened to traffic until test specimens molded and cured in accordance with ASTM C31 have attained a flexural strength of 450 pounds per square inch when tested in accordance with ASTM C78. If such tests are not conducted, the pavement shall not be opened to traffic until 14 days after the concrete was placed. Prior to opening the pavement to construction traffic, all joints shall either be sealed or protected from damage to the joint edge and intrusion of foreign materials into the joint. As a minimum, backer rod or tape may be used to protect the joints from foreign matter intrusion.

501-4.19 Repair, removal, or replacement of slabs. New pavement slabs that are broken or contain cracks or are otherwise defective or unacceptable as defined by acceptance criteria in paragraph 501-6.6 shall be removed and replaced or repaired, as directed by the RPR, at the Contractor's expense. Spalls along joints shall be repaired as specified. Removal of partial slabs is not permitted. Removal and replacement shall be full depth, shall be full width of the slab, and the limit of removal shall be normal to the paving lane and to each original transverse joint. The RPR will determine whether cracks extend full depth of the pavement and may require cores to be drilled on the crack to determine depth of cracking. Such cores shall be have a diameter of 2 inches to 4 inches, shall be drilled by the Contractor and shall be filled by the Contractor with a well consolidated concrete mixture bonded to the walls of the hole with a bonding agent, using approved procedures. Drilling of cores and refilling holes shall be at no expense to the Owner. Repair of cracks as described in this section shall not be allowed if in the opinion of the RPR the overall condition of the pavement indicates that such repair is unlikely to achieve an acceptable and durable finished pavement. No repair of cracks shall be allowed in any panel that demonstrates segregated aggregate with an absence of coarse aggregate in the upper 1/8 inch of the pavement surface.

a. Shrinkage cracks. Shrinkage cracks which do not exceed one-third of the pavement depth shall be cleaned and either high molecular weight methacrylate (HMWM) applied; or epoxy resin (Type IV, Grade 1) pressure injected using procedures recommended by the manufacturer and approved by the RPR. Sandblasting of the surface may be required following the application of HMWM to restore skid resistance. Care shall be taken to ensure that the crack is not widened during epoxy resin injection. All epoxy resin injection shall take place in the presence of the RPR. Shrinkage cracks which exceed one-third the pavement depth shall be treated as full depth cracks in accordance with paragraphs 501-4.19b and 501-19c.

b. Slabs with cracks through interior areas. Interior area is defined as that area more than 6 inches from either adjacent original transverse joint. The full slab shall be removed and replaced at no cost to the Owner, when there are any full depth cracks, or cracks greater than one-third the pavement depth, that extend into the interior area.

c. Cracks close to and parallel to joints. All full-depth cracks within 6 inches either side of the joint and essentially parallel to the original joints, shall be treated as follows.

(1) Full depth cracks and original joint not cracked. The full-depth crack shall be treated as the new joint and the original joint filled with an epoxy resin.

i. Full-depth crack. The joint sealant reservoir for the crack shall be formed by sawing to a depth of 3/4 inches, ±1/16 inch, and to a width of 5/8 inch, ±1/8 inch. The crack shall be sawed with equipment specially designed to follow random cracks. Any equipment or procedure which causes raveling or spalling along the crack shall be modified or replaced to prevent raveling or spalling. The joint shall be sealed with sealant in accordance with P-605 or as directed by the RPR.

ii. Original joint. If the original joint sealant reservoir has been sawed out, the reservoir and as much of the lower saw cut as possible shall be filled with epoxy resin, Type IV, Grade 2, thoroughly tooled into the void using approved procedures.

If only the original narrow saw cut has been made, it shall be cleaned and pressure injected with epoxy resin, Type IV, Grade 1, using approved procedures.

Where a parallel crack goes part way across paving lane and then intersects and follows the original joint which is cracked only for the remained of the width, it shall be treated as specified above for a parallel crack, and the cracked original joint shall be prepared and sealed as originally designed.

(2) Full depth cracks and original joint cracked. If there is any place in the lane width where a parallel crack and a cracked portion of the original joint overlap, the entire slab containing the crack shall be removed and replaced.

d. Removal and replacement of full slabs. Make a full depth cut perpendicular to the slab surface along all edges of the slab with a concrete saw cutting any dowels or tie-bars. Remove damaged slab protecting adjacent pavement from damage. Damage to adjacent slabs may result in removal of additional slabs as directed by the RPR at the Contractor's expense.

The underlying material shall be repaired, re-compacted and shaped to grade.

Dowels of the size and spacing specified for other joints in similar pavement on the project shall be installed along all four (4) edges of the new slab in accordance with paragraph 501-4.10d.

Placement of concrete shall be as specified for original construction. The joints around the new slab shall be prepared and sealed as specified for original construction.

e. Spalls along joints.

(1) Spalls less than one inch wide and less than the depth of the joint sealant reservoir, shall be filled with joint sealant material.

(2) Spalls larger than one inch and/or deeper than the joint reservoir, but less than ½ the slab depth, and less than 25% of the length of the adjacent joint shall be repaired as follows:

i. Make a vertical saw cut at least one inch outside the spalled area and to a depth of at least 2 inches. Saw cuts shall be straight lines forming rectangular areas surrounding the spalled area.

ii. Remove unsound concrete and at least 1/2 inch of visually sound concrete between the saw cut and the joint or crack with a light chipping hammer.

iii. Clean cavity with high-pressure water jets supplemented with compressed air as needed to remove all loose material.

iv. Apply a prime coat of epoxy resin, Type III, Grade I, to the dry, cleaned surface of all sides and bottom of the cavity, except any joint face.

v. Fill the cavity with low slump concrete or mortar or with epoxy resin concrete or mortar.

vi. An insert or other bond-breaking medium shall be used to prevent bond at all joint faces.

vii. A reservoir for the joint sealant shall be sawed to the dimensions required for other joints, or as required to be routed for cracks. The reservoir shall be thoroughly cleaned and sealed with the sealer specified for the joints.

(3) Spalls deeper than 1/2 of the slab depth or spalls longer than 25% of the adjacent joint require replacement of the entire slab.

f. Diamond grinding of Concrete surfaces. Diamond grinding shall be completed prior to pavement grooving. Diamond grinding of the hardened concrete should not be performed until the concrete is at least 14 days old and has achieved full minimum strength. Equipment that causes ravels, aggregate fractures, spalls or disturbance to the joints will not be permitted. The depth of diamond grinding shall not exceed 1/2

inch and all areas in which diamond grinding has been performed will be subject to the final pavement thickness tolerances specified.

Diamond grinding shall be performed with a machine specifically designed for diamond grinding capable of cutting a path at least 3 feet wide. The saw blades shall be 1/8-inch wide with sufficient number of flush cut blades that create grooves between 0.090 and 0.130 inches wide; and peaks and ridges approximately 1/32 inch higher than the bottom of the grinding cut. The Contractor shall determine the number and type of blades based on the hardness of the aggregate. Contractor shall demonstrate to the RPR that the grinding equipment will produce satisfactory results prior to making corrections to surfaces.

Grinding will be tapered in all directions to provide smooth transitions to areas not requiring grinding. The slurry resulting from the grinding operation shall be continuously removed and the pavement left in a clean condition. All grinding shall be at the expense of the Contractor.

CONTRACTOR QUALITY CONTROL (CQC)

501-5.1 Quality control program. The Contractor shall develop a Quality Control Program in accordance with Item C-100. No partial payment will be made for materials that are subject to specific quality control requirements without an approved quality control program.

501-5.2 Contractor Quality Control (CQC). The Contractor shall provide or contract for testing facilities in accordance with Item C-100. The RPR shall be permitted unrestricted access to inspect the Contractor's QC facilities and witness QC activities. The RPR will advise the Contractor in writing of any noted deficiencies concerning the QC facility, equipment, supplies, or testing personnel and procedures. When the deficiencies are serious enough to be adversely affecting the test results, the incorporation of the materials into the work shall be suspended immediately and will not be permitted to resume until the deficiencies are satisfactorily corrected.

501-5.3 Contractor QC testing. The Contractor shall perform all QC tests necessary to control the production and construction processes applicable to this specification and as set forth in the CQCP. The testing program shall include, but not necessarily be limited to, tests for aggregate gradation, aggregate moisture content, slump, and air content. A QC Testing Plan shall be developed and approved by the RPR as part of the CQCP.

The RPR may at any time, notwithstanding previous plant acceptance, reject and require the Contractor to dispose of any batch of concrete mixture which is rendered unfit for use due to contamination, segregation, or improper slump. Such rejection may be based on only visual inspection. In the event of such rejection, the Contractor may take a representative sample of the rejected material in the presence of the RPR, and if it can be demonstrated in the laboratory, in the presence of the RPR, that such material was erroneously rejected, payment will be made for the material at the contract unit price .

a. Fine aggregate.

(1) Gradation. A sieve analysis shall be made at least twice daily in accordance with ASTM C136 from randomly sampled material taken from the discharge gate of storage bins or from the conveyor belt.

(2) Moisture content. If an electric moisture meter is used, at least two direct measurements of moisture content shall be made per week to check the calibration. If direct measurements are made in lieu of using an electric meter, two tests shall be made per day. Tests shall be made in accordance with ASTM C70 or ASTM C566.

(3) Deleterious substances. Fine aggregate as delivered to the mixer shall be tested for deleterious substances in fine aggregate for concrete as specified in paragraph 501-2.1b, prior to production of the

control strip, and a minimum of every 30-days during production or more frequently as necessary to control deleterious substances.

b. Coarse Aggregate.

(1) Gradation. A sieve analysis shall be made at least twice daily for each size of aggregate. Tests shall be made in accordance with ASTM C136 from randomly sampled material taken from the discharge gate of storage bins or from the conveyor belt.

(2) Moisture content. If an electric moisture meter is used, at least two direct measurements of moisture content shall be made per week to check the calibration. If direct measurements are made in lieu of using an electric meter, two tests shall be made per day. Tests shall be made in accordance with ASTM C566.

(3) Deleterious substances. Coarse aggregate as delivered to the mixer shall be tested for deleterious substances in coarse aggregate for concrete as specified in paragraph 501-2.1c, prior to production of the control strip, and a minimum of every 30-days during production or more frequently as necessary to control deleterious substances.

c. Slump. One test shall be made for each sublot. Slump tests shall be performed in accordance with ASTM C143 from material randomly sampled from material discharged from trucks at the paving site. Material samples shall be taken in accordance with ASTM C172.

d. Air content. One test shall be made for each sublot. Air content tests shall be performed in accordance with ASTM C231 for gravel and stone coarse aggregate and ASTM C173 for slag or other porous coarse aggregate, from material randomly sampled from trucks at the paving site. Material samples shall be taken in accordance with ASTM C172.

e. Unit weight and Yield. One test shall be made for each sublot. Unit weight and yield tests shall be in accordance with ASTM C138. The samples shall be taken in accordance with ASTM C172 and at the same time as the air content tests.

f. Temperatures. Temperatures shall be checked at least four times per lot at the job site in accordance with ASTM C1064.

g. Smoothness for Contractor Quality Control.

The Contractor shall perform smoothness testing in transverse and longitudinal directions daily to verify that the construction processes are producing pavement with variances less than ¼ inch in 12 feet, identifying areas that may pond water which could lead to hydroplaning of aircraft. If the smoothness criteria is not met, appropriate changes and corrections to the construction process shall be made by the Contractor before construction continues

The Contractor may use a 12-foot straightedge, a rolling inclinometer meeting the requirements of ASTM E2133 or rolling external reference device that can simulate a 12-foot straightedge approved by the RPR. Straight-edge testing shall start with one-half the length of the straightedge at the edge of pavement section being tested and then moved ahead one-half the length of the straightedge for each successive measurement. Testing shall be continuous across all joints. The surface irregularity shall be determined by placing the freestanding (unleveled) straightedge on the pavement surface and allowing it to rest upon the two highest spots covered by its length, and measuring the maximum gap between the straightedge and the pavement surface in the area between the two high points. If the rolling inclinometer or external reference device is used, the data may be evaluated using the FAA profile program, ProFAA, using the 12-foot straightedge simulation function.

Smoothness readings shall not be made across grade changes or cross slope transitions. The transition between new and existing pavement shall be evaluated separately for conformance with the plans.

(1) Transverse measurements. Transverse measurements shall be taken for each day's production placed. Transverse measurements shall be taken perpendicular to the pavement centerline each 50 feet or more often as determined by the RPR. The joint between lanes shall be tested separately to facilitate smoothness between lanes.

(2) Longitudinal measurements. Longitudinal measurements shall be taken for each day's production placed. Longitudinal tests shall be parallel to the centerline of paving; at the center of paving lanes when widths of paving lanes are less than 20 feet; and at the third points of paving lanes when widths of paving lanes are 20 ft or greater.

Deviations on the final surface course in either the transverse or longitudinal direction that will trap water greater than 1/4 inch shall be corrected with diamond grinding per paragraph 501-4.19f or by removing and replacing the surface course to full depth. Grinding shall be tapered in all directions to provide smooth transitions to areas not requiring grinding. All areas in which diamond grinding has been performed shall be subject to the final pavement thickness tolerances specified in paragraph 501-6.6.

Control charts shall be kept to show area of each day's placement and the percentage of corrective grinding required. Corrections to production and placement shall be initiated when corrective grinding is required. If the Contractor's machines and/or methods produce significant areas that need corrective actions in excess of 10 percent of a day's production, production shall be stopped until corrective measures are implemented by the Contractor.

h. Grade. Grade will be evaluated prior to and after placement of the concrete surface.

Measurements will be taken at appropriate gradelines (as a minimum at center and edges of paving lane) and longitudinal spacing as shown on cross-sections and plans. The final surface of the pavement will not vary from the gradeline elevations and cross-sections shown on the plans by more than 1/2 inch vertically **and 0.1 feet laterally** . The documentation will be provided by the Contractor to the RPR **by the end of the following working day** .

Areas with humps or depression that that exceed grade or smoothness and that retain water on the surface must be ground off provided the course thickness after grinding is not more than 1/2 inch less than the thickness specified on the plans. If these areas cannot be corrected with grinding then the slabs that are retaining water must be removed and replaced in accordance with paragraph 501-4.19d. Grinding shall be in accordance with paragraph 501-4.19f. All corrections will be at the Contractors expense.

501-5.4 Control charts. The Contractor shall maintain linear control charts for fine and coarse aggregate gradation, slump, and air content. The Contractor shall also maintain a control chart plotting the coarseness factor/workability factor from the combined gradations in accordance with paragraph 501-2.1d.

Control charts shall be posted in a location satisfactory to the RPR and shall be kept up to date at all times. As a minimum, the control charts shall identify the project number, the contract item number, the test number, each test parameter, the Action and suspension Limits, or Specification limits, applicable to each test parameter, and the Contractor's test results. The Contractor shall use the control charts as part of a process control system for identifying potential problems and assignable causes before they occur. If the Contractor's projected data during production indicates a potential problem and the Contractor is not taking satisfactory corrective action, the RPR may halt production or acceptance of the material.

a. Fine and coarse aggregate gradation. The Contractor shall record the running average of the last five gradation tests for each control sieve on linear control charts. Superimposed on the control charts shall be the action and suspension limits. Gradation tests shall be performed by the Contractor per ASTM C136. The Contractor shall take at least **[** two **]** samples per lot to check the final gradation. Sampling shall be per ASTM D75 from the flowing aggregate stream or conveyor belt.

b. Slump and air content. The Contractor shall maintain linear control charts both for individual measurements and range (that is, difference between highest and lowest measurements) for slump and air content in accordance with the following Action and Suspension Limits.

c. Combined gradation. The Contractor shall maintain a control chart plotting the coarseness factor and workability factor on a chart in accordance with paragraph 501-2.1d.

Control Chart Limits[1]

Control Parameter	Individual Measurements	
	Action Limit	**Suspension Limit**
Gradation[2]	*[3]	*[3]
Coarseness Factor (CF)	±3.5	±5
Workability Factor (WF)	±2	±3
Slump	+0.5 to -1 inch	+1 to -1.5 inch
Air Content	±1.5%	±2.0%

[1] Control charts shall developed and maintained for each control parameter indicated.

[2] Control charts shall be developed and maintained for each sieve size.

[3] Action and suspension limits shall be determined by the Contractor.

501-5.5 Corrective action at Suspension Limit. The CQCP shall indicate that appropriate action shall be taken when the process is believed to be out of control. The CQCP shall detail what action will be taken to bring the process into control and shall contain sets of rules to gauge when a process is out of control. As a minimum, a process shall be deemed out of control and corrective action taken if any one of the following conditions exists.

a. Fine and coarse aggregate gradation. When two consecutive averages of five tests are outside of the suspension limits, immediate steps, including a halt to production, shall be taken to correct the grading.

b. Coarseness and Workability factor. When the CF or WF reaches the applicable suspension limits, the Contractor, immediate steps, including a halt to production, shall be taken to correct the CF and WF.

c. Fine and coarse aggregate moisture content. Whenever the moisture content of the fine or coarse aggregate changes by more than 0.5%, the scale settings for the aggregate batcher and water batcher shall be adjusted.

d. Slump. The Contractor shall halt production and make appropriate adjustments whenever:

(1) one point falls outside the Suspension Limit line for individual measurements

OR

(2) two points in a row fall outside the Action Limit line for individual measurements.

d. Air content. The Contractor shall halt production and adjust the amount of air-entraining admixture whenever:

(1) one point falls outside the Suspension Limit line for individual measurements

OR

(2) two points in a row fall outside the Action Limit line for individual measurements.

MATERIAL ACCEPTANCE

501-6.1 Quality Assurance (QA) Acceptance sampling and testing. All acceptance sampling and testing necessary to determine conformance with the requirements specified in this section, with the exception of coring for thickness determination, will be performed by the RPR. The Contractor shall provide adequate facilities for the initial curing of beams. The Contractor shall bear the cost of providing initial curing facilities and coring and filling operations, per paragraph 501-6.5b(1).

The samples will be transported while in the molds. The curing, except for the initial cure period, will be accomplished using the immersion in saturated lime water method. During the 24 hours after molding, the temperature immediately adjacent to the specimens must be maintained in the range of 60° to 80°F, and loss of moisture from the specimens must be prevented. The specimens may be stored in tightly constructed wooden boxes, damp sand pits, temporary buildings at construction sites, under wet burlap in favorable weather, or in heavyweight closed plastic bags, or using other suitable methods, provided the temperature and moisture loss requirements are met.

501-6.2 Quality Assurance (QA) testing laboratory. Quality assurance testing organizations performing these acceptance tests will be accredited in accordance with ASTM C1077. The quality assurance laboratory accreditation must be current and listed on the accrediting authority's website. All test methods required for acceptance sampling and testing must be listed on the lab accreditation. A copy of the laboratory's current accreditation and accredited test methods will be submitted to the RPR prior to start of construction.

501-6.3 Lot size. Concrete will be accepted for strength and thickness on a lot basis. A lot will consist of a day's production not to exceed 2,000 cubic yards (**4800** square yards.) Each lot will be divided into approximately equal sublots with individual sublots between 400 to 600 cubic yards. Where three sublots are produced, they will constitute a lot. Where one or two sublots are produced, they will be incorporated into the previous or next lot. Where more than one plant is simultaneously producing concrete for the job, the lot sizes will apply separately for each plant.

501-6.4 Partial lots. When operational conditions cause a lot to be terminated before the specified number of tests have been made for the lot or for overages or minor placements to be considered as partial lots, the following procedure will be used to adjust the lot size and the number of tests for the lot.

Where three sublots have been produced, they will constitute a lot. Where one or two sublots have been produced, they will be incorporated into the next lot or the previous lot and the total number of sublots will be used in the acceptance criteria calculation, that is, n=5 or n=6.

501-6.5 Acceptance Sampling and Testing.

a. Strength.

(1) Sampling. One sample will be taken for each sublot from the concrete delivered to the job site. Sampling locations will be determined by the RPR in accordance with random sampling procedures contained in ASTM D3665. The concrete will be sampled in accordance with ASTM C172.

(2) Test Specimens. The RPR will be responsible for the casting, initial curing, transportation, and curing of specimens in accordance with ASTM C31. Two (2) specimens will be made from each sample and slump, air content, unit weight, and temperature tests will be conducted for each set of strength specimens. Within 24 to 48 hours, the samples will be transported from the field to the laboratory while in the molds. Samples will be cured in saturated lime water.

The strength of each specimen will be determined in accordance with **[** ASTM C39 **][** ASTM C78 **]**. The strength for each sublot will be computed by averaging the results of the two test specimens representing that sublot.

(3) Acceptance. Acceptance of pavement for strength will be determined by the RPR in accordance with paragraph 501-6.6b(1). All individual strength tests within a lot will be checked for outliers in

accordance with ASTM E178, at a significance level of 5%. Outliers will be discarded and the remaining test values will be used to determine acceptance in accordance with paragraph 501-6.5b.

b. Pavement thickness.

(1) Sampling. One core will be taken by the Contractor for each sublot in the presence of the RPR. Sampling locations will be determined by the RPR in accordance with random sampling procedures contained in ASTM D3665. Areas, such as thickened edges, with planned variable thickness, will be excluded from sample locations.

Cores shall be a minimum 4 inch in diameter neatly cut with a core drill. The Contractor will furnish all tools, labor, and materials for cutting samples and filling the cored hole. Core holes will be filled by the Contractor with a non-shrink grout approved by the RPR within one day after sampling.

(2) Testing. The thickness of the cores will be determined by the RPR by the average caliper measurement in accordance with ASTM C174. Each core shall be photographed and the photograph included with the test report.

(3) Acceptance. Acceptance of pavement for thickness will be determined by the RPR in accordance with paragraph 501-6.6.

501-6.6 Acceptance criteria.

a. General. Acceptance will be based on the following characteristics of the completed pavement discussed in paragraph 501-6.5b:

(1) Strength

(2) Thickness

(3) Grade

(4) Profilograph smoothness **[Not used.]**

(5) Adjustments for repairs

Acceptance for strength, thickness, and grade, will be based on the criteria contained in accordance with paragraph 501-6.6b(1), 501-6.6b(2), and 501-6.6b(3), respectively.

[Production quality must achieve 90 PWL or higher to receive full payment.

Strength and thickness will be evaluated for acceptance on a lot basis using the method of estimating PWL. Production quality must achieve 90 PWL or higher to receive full pavement. The PWL will be determined in accordance with procedures specified in Item C-110.

The lower specification tolerance limit (L) for strength and thickness will be:

Lower Specification Tolerance Limit (L)

Strength	0.93 × strength specified in paragraph 501-3.3
Thickness	Lot Plan Thickness in inches, - 0.50 in

]

b. Acceptance criteria.

(1) Strength. If the PWL of the lot equals or exceeds 90%, the lot will be acceptable. Acceptance and payment for the lot will be determined in accordance with paragraph 501-8.1.

(**2) Thickness.** If the PWL of the lot equals or exceeds 90%, the lot will be acceptable. Acceptance and payment for the lot will be determined in accordance with paragraph 501-8.1 **.**

(3) Grade. The final finished surface of the pavement of the completed project will not vary from the gradeline elevations and cross-sections shown on the plans by more than 1/2 inch vertically **or 0.1 feet laterally**. The documentation, stamped and signed by a licensed surveyor shall be in accordance with paragraph 501-5.3h. Payment for sublots that do not meet grade for over 25% of the sublot shall reduced by 5% and not be more than 95%.

(4) Profilograph roughness for QA Acceptance. Not used.

(5) Adjustments for repair. Sublots with spall repairs, crack repairs, or partial panel replacement, will be limited to no more than 95% payment.

(6) Adjustment for grinding. For sublots with grinding over 25% of a sublot, payment will be reduced 5%.

METHOD OF MEASUREMENT

501-7.1 Concrete pavement shall be measured by the number of square yards of plain or reinforced pavement as specified in-place, completed and accepted.

BASIS OF PAYMENT

501-8.1 Payment. Payment for concrete pavement meeting all acceptance criteria as specified in paragraph 501-6.6. Acceptance Criteria shall be based on results of strength and thickness tests. Payment for acceptable lots of concrete pavement shall be adjusted in accordance with paragraph 501-8.1a for strength and thickness; 501-8.1b for repairs; 501-8.1c for grinding; and 501-8.1d for smoothness, subject to the limitation that:

The total project payment for concrete pavement shall not exceed **100** percent of the product of the contract unit price and the total number of square yards of concrete pavement used in the accepted work (See Note 1 under the Price Adjustment Schedule table below).

Payment shall be full compensation for all labor, materials, tools, equipment, and incidentals required to complete the work as specified herein and on the drawings.

a. Basis of adjusted payment. The pay factor for each individual lot shall be calculated in accordance with the Price Adjustment Schedule table below. A pay factor shall be calculated for both strength and thickness. The lot pay factor shall be the higher of the two values when calculations for both strength and thickness are 100% or higher. The lot pay factor shall be the product of the two values when only one of the calculations for either strength or thickness is 100% or higher. The lot pay factor shall be the lower of the two values when calculations for both strength and thickness are less than 100%.

Price Adjustment Schedule[1]

Percentage of Materials Within Specification Limits (PWL)	Lot Pay Factor (Percent of Contract Unit Price)
96 – 100	106
90 – 95	PWL + 10
75 – 90	0.5 PWL + 55
55 – 74	1.4 PWL – 12
Below 55	Reject[2]

[1] Although it is theoretically possible to achieve a pay factor of 106% for each lot, actual payment in excess of 100% shall be subject to the total project payment limitation specified in paragraph 501-8.1.

[2] The lot shall be removed and replaced unless, after receipt of FAA concurrence, the Owner and Contractor agree in writing that the lot will remain; the lot paid at 50% of the contract unit price; and the total project payment limitation reduced by the amount withheld for that lot.

For each lot accepted, the adjusted contract unit price shall be the product of the lot pay factor for the lot and the contract unit price. Payment shall be subject to the total project payment limitation specified in paragraph 501-8.1. Payment in excess of 100% for accepted lots of concrete pavement shall be used to offset payment for accepted lots of concrete pavement that achieve a lot pay factor less than 100%; except for rejected lots which remain in place and/or sublots with adjustments for repairs.

b. Adjusted payment for repairs. The PWL lot pay factor shall be reduced by 5% and be no higher than 95% for sublots which contain repairs in accordance with paragraph 501-4.19 on more than 20% of the slabs within the sublot. Payment factors greater than 100 percent for the strength and thickness cannot be used to offset adjustments for repairs.

c. Adjusted payment for grinding. The PWL lot pay factor shall be reduced by 5% and be no higher than 95% for sublots with grinding over 25% of a sublot.

d. Profilograph Roughness.

Not used.

e. Payment. Payment shall be made under:

Item P-501 18.75” Concrete Pavement - per square yard

REFERENCES

The publications listed below form a part of this specification to the extent referenced. The publications are referred to within the text by the basic designation only.

ASTM International (ASTM)

ASTM A184	Standard Specification for Welded Deformed Steel Bar Mats for Concrete Reinforcement
ASTM A615	Standard Specification for Deformed and Plain Carbon-Steel Bars for Concrete Reinforcement
ASTM A704	Standard Specification for Welded Steel Plain Bar or Rod Mats for Concrete Reinforcement

ASTM A706	Standard Specification for Low-Alloy Steel Deformed and Plain Bars for Concrete Reinforcement
ASTM A775	Standard Specification for Epoxy-Coated Steel Reinforcing Bars
ASTM A884	Standard Specification for Epoxy-Coated Steel Wire and Welded Wire Reinforcement
ASTM A934	Standard Specification for Epoxy-Coated Prefabricated Steel Reinforcing Bars
ASTM A996	Standard Specification for Rail-Steel and Axle-Steel Deformed Bars for Concrete Reinforcement
ASTM A1035	Standard Specification for Deformed and Plain, Low-Carbon, Chromium, Steel Bars for Concrete Reinforcement
ASTM A1064	Standard Specification for Carbon-Steel Wire and Welded Wire Reinforcement, Plain and Deformed, for Concrete
ASTM A1078	Standard Specification for Epoxy-Coated Steel Dowels for Concrete Pavement
ASTM C29	Standard Test Method for Bulk Density (“Unit Weight”) and Voids in Aggregate
ASTM C31	Standard Practice for Making and Curing Concrete Test Specimens in the Field
ASTM C33	Standard Specification for Concrete Aggregates
ASTM C39	Standard Test Method for Compressive Strength of Cylindrical Concrete Specimens
ASTM C70	Standard Test Method for Surface Moisture in Fine Aggregate
ASTM C78	Standard Test Method for Flexural Strength of Concrete (Using Simple Beam with Third-Point Loading)
ASTM C88	Standard Test Method for Soundness of Aggregates by Use of Sodium Sulfate or Magnesium Sulfate
ASTM C94	Standard Specification for Ready-Mixed Concrete
ASTM C114	Standard Test Methods for Chemical Analysis of Hydraulic Cement
ASTM C117	Standard Test Method for Materials Finer than 75-µm (No. 200) Sieve in Mineral Aggregates by Washing
ASTM C123	Standard Test Method for Lightweight Particles in Aggregate
ASTM C136	Standard Test Method for Sieve Analysis of Fine and Coarse Aggregates
ASTM C131	Standard Test Method for Resistance to Degradation of Small-Size Coarse Aggregate by Abrasion and Impact in the Los Angeles Machine
ASTM C136	Standard Test Method for Sieve or Screen Analysis of Fine and Coarse Aggregates
ASTM C138	Standard Test Method for Density (Unit Weight), Yield, and Air Content (Gravimetric) of Concrete
ASTM C142	Standard Test Method for Clay Lumps and Friable Particles in Aggregates

ASTM C143	Standard Test Method for Slump of Hydraulic-Cement Concrete
ASTM C150	Standard Specification for Portland Cement
ASTM C171	Standard Specification for Sheet Materials for Curing Concrete
ASTM C172	Standard Practice for Sampling Freshly Mixed Concrete
ASTM C173	Standard Test Method for Air Content of Freshly Mixed Concrete by the Volumetric Method
ASTM C174	Standard Test Method for Measuring Thickness of Concrete Elements Using Drilled Concrete Cores
ASTM C227	Standard Test Method for Potential Alkali Reactivity of Cement-Aggregate Combinations (Mortar-Bar Method)
ASTM C231	Standard Test Method for Air Content of Freshly Mixed Concrete by the Pressure Method
ASTM C260	Standard Specification for Air-Entraining Admixtures for Concrete
ASTM C295	Standard Guide for Petrographic Examination of Aggregates for Concrete
ASTM C309	Standard Specification for Liquid Membrane-Forming Compounds for Curing Concrete
ASTM C311	Standard Test Methods for Sampling and Testing Fly Ash or Natural Pozzolans for Use in Portland Cement Concrete
ASTM C494	Standard Specification for Chemical Admixtures for Concrete
ASTM C566	Standard Test Method for Total Evaporable Moisture Content of Aggregates by Drying
ASTM C595	Standard Specification for Blended Hydraulic Cements
ASTM C618	Standard Specification for Coal Fly Ash and Raw or Calcined Natural Pozzolan for Use in Concrete
ASTM C642	Standard Test Method for Density, Absorption, and Voids in Hardened Concrete
ASTM C666	Standard Test Method for Resistance of Concrete to Rapid Freezing and Thawing
ASTM C685	Standard Specification for Concrete Made by Volumetric Batching and Continuous Mixing
ASTM C881	Standard Specification for Epoxy-Resin-Base Bonding Systems for Concrete
ASTM C989	Standard Specification for Slag Cement for Use in Concrete and Mortars
ASTM C1017	Standard Specification for Chemical Admixtures for Use in Producing Flowing Concrete
ASTM C1064	Test Method for Temperature of Freshly Mixed Hydraulic-Cement Concrete
ASTM C1077	Standard Practice for Agencies Testing Concrete and Concrete Aggregates for Use in Construction and Criteria for Testing Agency Evaluation

ASTM C1157	Standard Performance Specification for Hydraulic Cement
ASTM C1260	Standard Test Method for Potential Alkali Reactivity of Aggregates (Mortar-Bar Method)
ASTM C1365	Standard Test Method for Determination of the Proportion of Phases in Portland Cement and Portland-Cement Clinker Using X-Ray Powder Diffraction Analysis
ASTM C1567	Standard Test Method for Determining the Potential Alkali-Silica Reactivity of Combinations of Cementitious Materials and Aggregate (Accelerated Mortar-Bar Method)
ASTM C1602	Standard Specification for Mixing Water Used in the Production of Hydraulic Cement Concrete
ASTM D75	Standard Practice for Sampling Aggregates
ASTM D1751	Standard Specification for Preformed Expansion Joint Filler for Concrete Paving and Structural Construction (Nonextruding and Resilient Bituminous Types)
ASTM D1752	Standard Specification for Preformed Sponge Rubber and Cork and Recycled PVC Expansion Joint Fillers for Concrete Paving and Structural Construction
ASTM D2419	Standard Test Method for Sand Equivalent Value of Soils and Fine Aggregate
ASTM D3665	Standard Practice for Random Sampling of Construction Materials
ASTM D4791	Standard Test Method for Flat Particles, Elongated Particles, or Flat and Elongated Particles in Coarse Aggregate
ASTM E178	Standard Practice for Dealing with Outlying Observations
ASTM E1274	Standard Test Method for Measuring Pavement Roughness Using a Profilograph
ASTM E2133	Standard Test Method for Using a Rolling Inclinometer to Measure Longitudinal and Transverse Profiles of a Traveled Surface

American Concrete Institute (ACI)

ACI 305R	Guide to Hot Weather Concreting
ACI 306R	Guide to Cold Weather Concreting
ACI 309R	Guide for Consolidation of Concrete

Advisory Circulars (AC)

AC 150/5320-6	Airport Pavement Design and Evaluation

Federal Highway Administration (FHWA)

HIPERPAV 3, version 3.2

Portland Concrete Association (PCA)

PCA	Design and Control of Concrete Mixtures, 16th Edition

U.S. Army Corps of Engineers (USACE) Concrete Research Division (CRD)

CRD C662	Determining the Potential Alkali-Silica Reactivity of Combinations of Cementitious Materials, Lithium Nitrate Admixture and Aggregate (Accelerated Mortar-Bar Method)

United States Air Force Engineering Technical Letter (ETL)

ETL 97-5	Proportioning Concrete Mixtures with Graded Aggregates for Rigid Airfield Pavements

END ITEM P-501

Item P-602

Emulsified Asphalt Prime Coat

DESCRIPTION

602-1.1 This item shall consist of an application of emulsified asphalt material on the prepared base course in accordance with these specifications and in reasonably close conformity to the lines shown on the plans.

MATERIALS

602-2.1 Emulsified Asphalt material. The emulsified asphalt material shall be as specified in ASTM D3628 for use as a prime coat appropriate to local conditions. The Contractor shall provide a copy of the manufacturer's Certificate of Analysis (COA) for the emulsified asphalt material. The COA shall be provided to and approved by the Resident Project Representative (RPR) before the emulsified asphalt material is applied. The furnishing of the COA for the emulsified asphalt material shall not be interpreted as a basis for final acceptance. The manufacturer's COA may be subject to verification by testing the material delivered for use on the project.

CONSTRUCTION METHODS

602-3.1 Weather limitations. The emulsified asphalt prime coat shall be applied only when the existing surface is dry; the atmospheric temperature is 50°F or above, and the temperature has not been below 35°F for the 12 hours prior to application; and when the weather is not foggy or rainy. The temperature requirements may be waived when directed by the RPR.

602-3.2 Equipment. The equipment shall include a self-powered pressure asphalt material distributor and equipment for heating asphalt material.

Provide a distributor with pneumatic tires of such size and number that the load produced on the base surface does not exceed 65.0 psi of tire width to prevent rutting, shoving or otherwise damaging the base, surface or other layers in the pavement structure. Design and equip the distributor to spray the asphalt material in a uniform coverage at the specified temperature, at readily determined and controlled rates from 0.05 to 1.0 gallons per square yard, with a pressure range of 25 to 75 psi and with an allowable variation from the specified rate of not more than ±5%, and at variable widths. Include with the distributor equipment a separate power unit for the bitumen pump, full-circulation spray bars, tachometer, pressure gauges, volume-measuring devices, adequate heaters for heating of materials to the proper application temperature, a thermometer for reading the temperature of tank contents, and a hand hose attachment suitable for applying asphalt material manually to areas inaccessible to the distributor. Equip the distributor to circulate and agitate the asphalt material during the heating process. If the distributor is not equipped with an operable quick shutoff valve, the prime operations shall be started and stopped on building paper.

A power broom and power blower suitable for cleaning the surfaces to which the asphalt coat is to be applied shall be provided.

Asphalt distributors must be calibrated annually in accordance with ASTM D2995. The Contractor must furnish a current calibration certification for the asphalt distributor truck from any State or other agency as approved by the RPR.

602-3.3 Application of emulsified asphalt material. Immediately before applying the prime coat, the full width of the surface to be primed shall be swept with a power broom to remove all loose dirt and other objectionable material.

The asphalt emulsion material shall be uniformly applied with an asphalt distributor at the rate of 0.15 to 0.30 gallons per square yard depending on the base course surface texture. The type of asphalt material and application rate shall be approved by the RPR prior to application.

Following application of the emulsified asphalt material and prior to application of the succeeding layer of pavement, allow the asphalt coat to cure and to obtain evaporation of any volatiles or moisture. Maintain the coated surface until the succeeding layer of pavement is placed, by protecting the surface against damage and by repairing and recoating deficient areas. Allow the prime coat to cure without being disturbed for a period of at least 48 hours or longer, as may be necessary to attain penetration into the treated course. Furnish and spread sand to effectively blot up and cure excess asphalt material. The Contractor shall remove blotting sand prior to asphalt concrete lay down operations at no additional expense to the Owner. Keep traffic off surfaces freshly treated with asphalt material. Provide sufficient warning signs and barricades so that traffic will not travel over freshly treated surfaces.

602-3.4 Trial application rates. The Contractor shall apply a minimum of three lengths of at least 100 feet for the full width of the distributor bar to evaluate the amount of emulsified asphalt material that can be satisfactorily applied with the equipment. Apply three different application rates of emulsified asphalt materials within the application range specified in paragraph 602-3.3. Other trial applications can be made using various amounts of material as directed by the RPR. The trial application is to demonstrate the equipment can uniformly apply the emulsified asphalt material within the rates specified and determine the application rate for the project.

602-3.5 Freight and waybills. The Contractor shall submit waybills and delivery tickets during the progress of the work. Before the final estimate is allowed, file with the RPR certified waybills and certified delivery tickets for all emulsified asphalt materials used in the construction of the pavement covered by the contract. Do not remove emulsified asphalt material from storage until the initial outage and temperature measurements have been taken. The delivery or storage units will not be released until the final outage has been taken.

METHOD OF MEASUREMENT

602-4.1 The emulsified asphalt material for prime coat shall be measured by the gallon . Volume shall be corrected to the volume at 60°F in accordance with ASTM D4311. The emulsified asphalt material paid for will be the measured quantities used in the accepted work, provided that the measured quantities are not 10% over the specified application rate. Any amount of emulsified asphalt material more than 10% over the specified application rate for each application will be deducted from the measured quantities, except for irregular areas where hand spraying of the emulsified asphalt material is necessary. Water added to emulsified asphalt will not be measured for payment.

BASIS OF PAYMENT

602-5.1 Payment shall be made at the contract unit price per gallon for emulsified asphalt prime coat. This price shall be full compensation for furnishing all materials and for all preparation, delivering, and applying the materials, and for all labor, equipment, tools, and incidentals necessary to complete this item.

Payment will be made under:

Item P-602	Emulsified Asphalt Prime Coat - per gallon

REFERENCES

The publications listed below form a part of this specification to the extent referenced. The publications are referred to within the text by the basic designation only.

ASTM International (ASTM)

ASTM D2995	Standard Practice for Estimating Application Rate and Residual Application Rate of Bituminous Distributors
ASTM D3628	Standard Practice for Selection and Use of Emulsified Asphalts

END OF ITEM P-602

Item P-603

Emulsified Asphalt Tack Coat

DESCRIPTION

603-1.1 This item shall consist of preparing and treating an asphalt or concrete surface with asphalt material in accordance with these specifications and in reasonably close conformity to the lines shown on the plans.

MATERIALS

603-2.1 Asphalt materials. The asphalt material shall be an emulsified asphalt as specified in ASTM D3628 as an asphalt application for tack coat appropriate to local conditions. The emulsified asphalt shall not be diluted. The Contractor shall provide a copy of the manufacturer's Certificate of Analysis (COA) for the asphalt material to the Resident Project Representative (RPR) before the asphalt material is applied for review and acceptance. The furnishing of COA for the asphalt material shall not be interpreted as a basis for final acceptance. The manufacturer's COA may be subject to verification by testing the material delivered for use on the project.

CONSTRUCTION METHODS

603-3.1 Weather limitations. The tack coat shall be applied only when the existing surface is dry and the atmospheric temperature is 50°F or above; the temperature has not been below 35°F for the 12 hours prior to application; and when the weather is not foggy or rainy. The temperature requirements may be waived when directed by the RPR.

603-3.2 Equipment. The Contractor shall provide equipment for heating and applying the emulsified asphalt material. The emulsion shall be applied with a manufacturer-approved computer rate-controlled asphalt distributor. The equipment shall be in good working order and contain no contaminants or diluents in the tank. Spray bar tips must be clean, free of burrs, and of a size to maintain an even distribution of the emulsion. Any type of tip or pressure source is suitable that will maintain predetermined flow rates and constant pressure during the application process with application speeds under eight (8) miles per hour or seven (700) feet per minute.

The equipment will be tested under pressure for leaks and to ensure proper set-up before use to verify truck set-up (via a test-shot area), including but not limited to, nozzle tip size appropriate for application, spray-bar height and pressure and pump speed, evidence of triple-overlap spray pattern, lack of leaks, and any other factors relevant to ensure the truck is in good working order before use.

The distributor truck shall be equipped with a minimum 12-foot spreader spray bar with individual nozzle control with computer-controlled application rates. The distributor truck shall have an easily accessible thermometer that constantly monitors the temperature of the emulsion, and have an operable mechanical tank gauge that can be used to cross-check the computer accuracy. If the distributor is not equipped with an operable quick shutoff valve, the prime operations shall be started and stopped on building paper.

The distributor truck shall be equipped to effectively heat and mix the material to the required temperature prior to application as required. Heating and mixing shall be done in accordance with the manufacturer's recommendations. Do not overheat or over mix the material.

The distributor shall be equipped with a hand sprayer.

Asphalt distributors must be calibrated annually in accordance with ASTM D2995. The Contractor must furnish a current calibration certification for the asphalt distributor truck from any State or other agency as approved by the RPR.

A power broom and/or power blower suitable for cleaning the surfaces to which the asphalt tack coat is to be applied shall be provided.

603-3.3 Application of emulsified asphalt material. The emulsified asphalt shall not be diluted. Immediately before applying the emulsified asphalt tack coat, the full width of surface to be treated shall be swept with a power broom and/or power blower to remove all loose dirt and other objectionable material.

The emulsified asphalt material shall be uniformly applied with an asphalt distributor at the rates appropriate for the conditions and surface specified in the table below. The type of asphalt material and application rate shall be approved by the RPR prior to application.

Emulsified Asphalt

Surface Type	Residual Rate, gal/SY	Emulsion Application Bar Rate, gal/SY
New asphalt	0.02-0.05	0.03-0.07
Existing asphalt	0.04-0.07	0.06-0.11
Milled Surface	0.04-0.08	.0.06-0.12
Concrete	0.03-0.05	0.05-0.08

After application of the tack coat, the surface shall be allowed to cure without being disturbed for the period of time necessary to permit drying and setting of the tack coat. This period shall be determined by the RPR. The Contractor shall protect the tack coat and maintain the surface until the next course has been placed. When the tack coat has been disturbed by the Contractor, tack coat shall be reapplied at the Contractor's expense.

603-3.4 Freight and waybills The Contractor shall submit waybills and delivery tickets, during progress of the work. Before the final statement is allowed, file with the RPR certified waybills and certified delivery tickets for all emulsified asphalt materials used in the construction of the pavement covered by the contract. Do not remove emulsified asphalt material from storage until the initial outage and temperature measurements have been taken. The delivery or storage units will not be released until the final outage has been taken.

METHOD OF MEASUREMENT

603-4.1 The emulsified asphalt material for tack coat shall be measured by the **gallon**. Volume shall be corrected to the volume at 60°F in accordance with ASTM D1250. The emulsified asphalt material paid for will be the measured quantities used in the accepted work, provided that the measured quantities are not 10% over the specified application rate. Any amount of emulsified asphalt material more than 10% over the specified application rate for each application will be deducted from the measured quantities, except for irregular areas where hand spraying of the emulsified asphalt material is necessary. Water added to emulsified asphalt will not be measured for payment.

BASIS OF PAYMENT

603.5-1 Payment shall be made at the contract unit price per **gallon** of emulsified asphalt material. This price shall be full compensation for furnishing all materials, for all preparation, delivery, and application of these materials, and for all labor, equipment, tools, and incidentals necessary to complete the item.

Payment will be made under:

Item P-603	Emulsified Asphalt Tack Coat – per gallon

REFERENCES

The publications listed below form a part of this specification to the extent referenced. The publications are referred to within the text by the basic designation only.

ASTM International (ASTM)

ASTM D1250	Standard Guide for Use of the Petroleum Measurement Tables
ASTM D2995	Standard Practice for Estimating Application Rate and Residual Application Rate of Bituminous Distributors
ASTM D3628	Standard Practice for Selection and Use of Emulsified Asphalts

END ITEM P-603

Item P-604

Compression Joint Seals for Concrete Pavements

DESCRIPTION

604-1.1 This item shall consist of preformed polychloroprene compression seals used for sealing joints of rigid pavements.

MATERIALS

604-2.1 Compression seals. Compression joint seal materials shall be a vulcanized elastomeric compound using polychloroprene as the only base polymer. The material and the manufactured seal shall conform to **ASTM D2628 and Corps of Engineers Concrete Research Division (CRD) C548 where jet fuel and/or heat blast resistance is required .**

The joint seal shall be a labyrinth type seal. The uncompressed depth of the face of the compression seal (that is to be bonded to the joint wall) shall be greater than the uncompressed width of the seal, except that for seals one inch or greater in width, the depth need be only one inch or greater. The actual width of the uncompressed seal shall be as recommended by the joint seal manufacturer for the type and width of joints as shown on the plans. The tolerance on the seal shall be +1/8 inch or -1/16 inch**,** below the top of the pavement surface or bottom of groove for grooved pavement.

The Contractor shall provide a copy of the manufacturer's Certificate of Analysis (COA) for the joint seal material delivered to the project. The COA shall be provided to and approved by the RPR before the material is installed. The furnishing of the vendor's certified test report shall not be interpreted as a basis for final acceptance. The manufacturer's COA may be subject to verification by testing the material delivered for use on the project.

Materials delivered to the job site shall be inspected for defects, unloaded, and stored with a minimum of handling to avoid damage. Storage facilities shall be provided at the job site to protect materials from weather and maintain materials at temperatures recommended by the manufacturer.

Representative sample of joint seal material will be sampled and retained by the RPR for possible testing.

604-2.2 Lubricant/adhesive. Lubricant/adhesive used for the compression elastomeric joint seal shall be a one-component compound conforming to ASTM D2835.

CONSTRUCTION METHODS

604-3.1 Equipment. Machines, tools, and equipment used in the performance of the work required by this section shall be approved by the RPR before the work starts and shall be maintained by the Contractor in satisfactory condition at all times.

a. Joint cleaning equipment.

(**1) Concrete saw.** A self-propelled power saw with water-cooled diamond saw blades shall be provided for cutting joints to the depths and widths specified and for removing filler, existing old joint seal or other material embedded in the joints or adhered to the joint faces.

(2) Waterblasting equipment. Waterblasting equipment shall include a trailer-mounted water tank, pumps, high-pressure hose, a wand with safety release cutoff controls, nozzle, and auxiliary water resupply equipment. The water tank and auxiliary water resupply equipment shall be of sufficient capacity to permit continuous operations. The pumps, hoses, wand, and nozzle shall be of sufficient capacity to

permit the cleaning of both walls of the joint and the pavement surface for a width of at least 1/2 inch on either side of the joint. The pump shall be capable of supplying a pressure of at least 3,000 psi. A pressure gauge mounted at the pump shall show at all times the pressure in pounds per square inch (psi) at which the equipment is operating.

(**3) Sandblasting equipment. Sandblasting is not allowed.**

b. Sealing equipment. Equipment used to install the compression seal shall place the compression seal to the prescribed depths within the specified tolerances without cutting, nicking, twisting, or otherwise damaging the seal. The equipment shall not stretch or compress the seal more than 2.0% longitudinally during installation. The machine shall be an automatic self-propelled joint seal application equipment and shall be engine powered. The machine shall include a reservoir for the lubricant/adhesive, a device for conveying the lubricant/adhesive in the proper quantities to the sides the preformed seal or the sidewalls of the joint, a reel capable of holding one full spool of compression seal, and a power-driven apparatus for feeding the joint seal through a compression device and inserting the seal into the joint. The equipment shall also include a guide to maintain the proper course along the joint being sealed. The machine shall at all times be operated by an experienced operator.

Hand operated joint seal application equipment may be used for localized areas and for projects less than 500 square yards. The equipment shall be a two-axle, four-wheel machine that includes means for compressing and inserting the compression seal into the joint and a reel capable of holding one full spool of compression seal material.

CONSTRUCTION METHODS

604-4.1 Environmental conditions. The ambient temperature and the pavement temperature within the joint wall shall be at least 35°F and rising at the time of installation of the materials. Sealant application will not be permitted if moisture or any foreign material is observed in the joint.

604-4.2 Trial joint seal and lubricant/adhesive installation. Prior to the cleaning and sealing of the joints for the entire project, a control strip at least 200 feet long shall be prepared at a location designated by the RPR using the specified materials and the approved equipment, to demonstrate the materials and construction processes for joint preparation and sealing of all types of joints included in the project. No other joints shall be sealed until the test installation has been approved by the RPR.

If materials or installation do not meet requirements, the materials shall be removed, and the joints shall be cleaned and a new trial joint seal installation shall be performed at the Contractor's expense. The RPR approved trial section will be incorporated into the permanent work.

604-4.3 Preparation of joints. Immediately before installation of the compression joint seal, the joints shall be thoroughly cleaned to remove all laitance, filler, existing sealer, foreign material and protrusions of hardened concrete from the sides and upper edges of the joint space to be sealed. Cleaning shall extend along pavement surfaces at least 1/2 inch on either side of the joint. After final cleaning and immediately prior to sealing, the joints shall be blown out with compressed air and left free of debris and water. Any irregularity in the joint face that would prevent uniform contact between the joint seal and the joint face shall be corrected prior to the installation of the joint seal.

a. Sawing. Joints shall be sawed to clean and to open them to the full specified width and depth. Immediately following the sawing operation, the joint faces and opening shall be thoroughly cleaned using a water jet to remove all saw cuttings or debris remaining on the faces or in the joint opening. Compression seal shall be installed within three (3) calendar days of the time the joint cavity is sawed. Depth of the joint cavity shall be in accordance with manufacturer's instructions. Submit printed copies of manufacturers' instructions **[** 60 days **]** prior to use on the project. The saw cut for the joint seal cavity shall at all

locations be centered over the joint line. The nominal width of the sawed joint seal cavity shall be as follows; the actual width shall be within a tolerance of ±1/16 inch:

(**1)** If a nominal 13/16 inch wide compression seal is furnished, the nominal width of the saw cut shall be **8/16** inches when the pavement temperature at the time of sawing is between **30** and **110** °F. If the pavement temperature at the time of sawing is above this range, the nominal width of the saw cut shall be decreased 1/16 inch. If the pavement temperature at the time of sawing is below this range, the nominal width of the saw cut shall be increased 1/16 inch.

(**2)** If a nominal one inch wide compression seal is furnished, the nominal width of the saw cut shall be **9/16** inches when the pavement temperature at the time of sawing is between **30** and **[___]**°F. If the pavement temperature at the time of sawing is above this range, the nominal width of the saw cut shall be decreased 1/16 inch. If the pavement temperature at the time of sawing is below this range, the nominal width of the saw cut shall be increased 1/16 inch.

(3) The pavement temperature shall be measured and recorded in the presence of the RPR. Measurement shall be made each day before commencing sawing and at any other time during the day when the temperature appears to be moving out of the allowable sawing range.

b. Waterblast cleaning. The concrete joint faces and pavement surfaces extending at least 1/2 inch from the joint edges shall be waterblasted clean. A multiple pass technique shall be used until the surfaces are free of dust, dirt, curing compound, or any residue that might prevent ready insertion or uniform contact of the seal and bonding of the lubricant/adhesive to the concrete. After final cleaning and immediately prior to sealing, the joints shall be blown out with compressed air and left completely free of debris and water.

c. Sandblast cleaning. **Sandblast cleaning is not allowed.**

d. Rate of progress. Cleaning of the joint faces shall be limited to the linear footage of joint that can be sealed during the same workday.

604-4.4 Installation of the compression seal.

a. Time of installation. Joints shall be sealed within **3** calendar days of sawing the joint seal cavity and the final cleaning of the joint walls, or a temporary seal shall be installed to prevent infiltration of foreign material. If rain interrupts the sealing operations, the joints shall be washed, cleaned with air and be dry before proceeding with installing of the lubricant/adhesive and compression seal.

b. Installation Sequence. Longitudinal joints shall be sealed first, then seal the transverse joints. Transverse joint seals will be continuous from edge to edge of the pavement. Intersections shall be made monolithic by use of joint seal adhesive and care in fitting the intersection parts together. Seals which do not reach an intersection shall be removed and replaced with new seal as directed by the RPR at the Contractor's Expense. Seal extender pieces shall not be used at intersections.

c. Sealing joints. The sides of the joint seal or the sides of the joint shall be covered with a coating of lubricant/adhesive and the seal installed as specified. Butt joints and seal intersections shall be coated with liberal applications of lubricant/adhesive. Lubricant/adhesive spilled on the pavement shall be removed immediately to prevent setting on the pavement.

The joint seal shall be placed at a uniform depth within the tolerances specified. The compression joint seal shall be placed to a depth of 3/16 inch, ±1/8 inch, below the pavement surface or below the depth of the groove unless otherwise directed by the RPR.

The seal shall be installed in the longest practicable lengths in longitudinal joints and shall be cut at the joint intersections to provide continuous installation of the seal in the transverse joints. The joint seal shall be installed in an upright position, free from twisting, distortion, and cuts. If stretch of installed joint seal exceeds 1%, adjustments shall be made to the installation equipment and procedure. Stretch of installed joint seals exceeding 2% stretch shall be removed and replaced.

After installation of the longitudinal joint seals, it shall set for a minimum of one (1) hour prior to cutting the seal at the joint intersections. For all transverse joints, the minimum length of the preformed joint seal shall be the pavement width from edge to edge.

604-4.5 Clean-up. Upon completion of the project, all unused materials shall be removed from the site, all lubricant/adhesive on the pavement surface shall be removed, and the pavement shall be left in clean condition.

604-4.6 Quality Control and Quality Assurance.

a. Quality Control The application equipment shall be inspected to assure uniform application of lubricant/adhesive to the sides of the compression joint seal or the walls of the joint. Equipment causing cutting, twisting, nicking, excessive stretching or compressing of the compression seal, or improper application of the lubricant/adhesive, shall not be used until causes of the deficiencies are determined and corrected by the Contractor.

The seal shall be inspected by the Contractor a minimum of once per 400 feet of seal for compliance to the shrinkage or compression requirements. Measurements shall be made at the same interval to determine conformance with depth and width installation requirements.

b. Quality Assurance. Cleaned joints shall be approved by the RPR prior to installation of the lubricant/adhesive and compression joint seal.

Conformance to stretching and compression limitations shall be determined by the RPR using the following procedures:

(1) Mark the top surface of the compression seal at one foot intervals in a manner clear and durable to enable length determinations of the seal.

(2) After installation, the distance between the marks on the seal shall be measured by the Contractor.

(3) If the stretching or compression exceeds the specified limit, the seal shall be removed and replaced with new joint seal at the Contractor's Expense. The seal shall be removed up to the last correct measurement.

604-4.7 Acceptance. The joint sealing system (compression seal and lubricant/adhesive) shall be inspected by the RPR for proper rate of cure and bonding to the concrete, cuts, twists, nicks, and other deficiencies. Seals exhibiting any defects prior to final acceptance of the project, shall be removed from the joint, wasted, and replaced with new material in a satisfactory manner, at the Contractor's expense, as determined by the RPR.

METHOD OF MEASUREMENT AND PAYMENT

There shall be no separate measurement or payment for the quantity of performed compression seals specified under this item. The cost of preformed compression seals shall be considered accidental to and include in the unit price for concrete pavement in Item P-501.

REFERENCES

The publications listed below form a part of this specification to the extent referenced. The publications are referred to within the text by the basic designation only.

ASTM International (ASTM)

ASTM D2628	Standard Specification for Preformed Polychloroprene Elastomeric Joint Seals for Concrete Pavements

ASTM D2835	Standard Specification for Lubricant for Installation of Preformed Compression Seals in Concrete Pavements

Corps of Engineers

CRD C548	Standard Specification for Jet-Fuel and Heat Resistant Preformed Polychloroprene Elastomeric Joint Seals for Rigid Pavements

Unified Facilities Criteria (UFC)

UFC 3-250-08FA	Standard Practice for Sealing Joints and Cracks in Rigid and Flexible Pavements

END ITEM P-604

Item P-605

Joint Sealants for Pavements

DESCRIPTION

605-1.1 This item shall consist of providing and installing a resilient and adhesive joint sealing material capable of effectively sealing joints in pavement; joints between different types of pavements; and cracks in existing pavement.

MATERIALS

605-2.1 Joint sealants. Joint sealant materials shall meet the requirements of **ASTM D5893 or ASTM D7116**.

Each lot or batch of sealant shall be delivered to the jobsite in the manufacturer's original sealed container. Each container shall be marked with the manufacturer's name, batch or lot number, the safe heating temperature, and shall be accompanied by the manufacturer's certification stating that the sealant meets the requirements of this specification.

605-2.2 Backer rod. The material furnished shall be a compressible, non-shrinking, non-staining, non-absorbing material that is non-reactive with the joint sealant in accordance with ASTM D5249. The backer-rod material shall be 25% ± 5 % larger in diameter than the nominal width of the joint.

605-2.3 Bond breaking tapes. Provide a bond breaking tape or separating material that is a flexible, non-shrinkable, non-absorbing, non-staining, and non-reacting adhesive-backed tape. The material shall have a melting point at least 5°F greater than the pouring temperature of the sealant being used when tested in accordance with ASTM D789. The bond breaker tape shall be approximately 1/8 inch wider than the nominal width of the joint and shall not bond to the joint sealant.

CONSTRUCTION METHODS

605-3.1 Time of application. Joints shall be sealed as soon after completion of the curing period as feasible and before the pavement is opened to traffic, including construction equipment. The pavement temperature shall be 50°F and rising at the time of application of the poured joint sealing material. Do not apply sealant if moisture is observed in the joint.

605-3.2 Equipment. Machines, tools, and equipment used in the performance of the work required by this section shall be approved before the work is started and maintained in satisfactory condition at all times. Submit a list of proposed equipment to be used in performance of construction work including descriptive data, **14** days prior to use on the project.

a. Concrete saw. Provide a self-propelled power saw, with water-cooled diamond or abrasive saw blades, for cutting joints to the depths and widths specified.

b. Sandblasting equipment. Sandblasting is not allowed.

c. Waterblasting equipment. The Contractor must demonstrate waterblasting equipment including the pumps, hose, guide and nozzle size, under job conditions, before approval in accordance with paragraph 605-3.3. The Contractor shall demonstrate, in the presence of the RPR, that the method cleans the joint and does not damage the joint.

d. Hand tools. Hand tools may be used, when approved, for removing defective sealant from a crack and repairing or cleaning the crack faces. Hand tools should be carefully evaluated for potential spalling effects prior to approval for use.

e. Cold-applied, single-component sealing equipment. The equipment for installing ASTM D5893 single component joint sealants shall consist of an extrusion pump, air compressor, following plate, hoses, and nozzle for transferring the sealant from the storage container into the joint opening. The dimension of the nozzle shall be such that the tip of the nozzle will extend into the joint to allow sealing from the bottom of the joint to the top. Maintain the initially approved equipment in good working condition, serviced in accordance with the supplier's instructions, and unaltered in any way without obtaining prior approval. Small hand-held air-powered equipment (i.e., caulking guns) may be used for small applications.

605-3.3 Preparation of joints. Pavement joints for application of material in this specification must be dry, clean of all scale, dirt, dust, curing compound, and other foreign matter. The Contractor shall demonstrate, in the presence of the RPR, that the method cleans the joint and does not damage the joint.

a. Sawing. All joints shall be sawed in accordance with specifications and plan details. Immediately after sawing the joint, the resulting slurry shall be completely removed from joint and adjacent area by flushing with a jet of water, and by use of other tools as necessary.

b. Sealing. Immediately before sealing, the joints shall be thoroughly cleaned of all remaining laitance, curing compound, filler, protrusions of hardened concrete, old sealant and other foreign material from the sides and upper edges of the joint space to be sealed. Cleaning shall be accomplished by **hand tools or waterblaster** as specified in paragraph 605-3.2. The newly exposed concrete joint faces and the pavement surface extending a minimum of 1/2 inch from the joint edge shall be sandblasted clean. Sandblasting shall be accomplished in a minimum of two passes. One pass per joint face with the nozzle held at an angle directly toward the joint face and not more than 3 inches from it. After final cleaning and immediately prior to sealing, blow out the joints with compressed air and leave them completely free of debris and water. The joint faces shall be surface dry when the seal is applied.

c. Backer Rod. When the joint opening is of a greater depth than indicated for the sealant depth, plug or seal off the lower portion of the joint opening using a backer rod in accordance with paragraph 605-2.2 to prevent the entrance of the sealant below the specified depth. Take care to ensure that the backer rod is placed at the specified depth and is not stretched or twisted during installation.

d. Bond-breaking tape. Where inserts or filler materials contain bitumen, or the depth of the joint opening does not allow for the use of a backup material, insert a bond-separating tape breaker in accordance with paragraph 605-2.3 to prevent incompatibility with the filler materials and three-sided adhesion of the sealant. Securely bond the tape to the bottom of the joint opening so it will not float up into the new sealant.

605-3.4 Installation of sealants. Joints shall be inspected for proper width, depth, alignment, and preparation, and shall be approved by the RPR before sealing is allowed. Sealants shall be installed in accordance with the following requirements:

Immediately preceding, but not more than 50 feet (15 m) ahead of the joint sealing operations, perform a final cleaning with compressed air. Fill the joints from the bottom up to **[1/8][1/4]** inch ±1/16 inch below the top of pavement surface; or bottom of groove for grooved pavement. Remove and discard excess or spilled sealant from the pavement by approved methods. Install the sealant in such a manner as to prevent the formation of voids and entrapped air. In no case shall gravity methods or pouring pots be used to install the sealant material. Traffic shall not be permitted over newly sealed pavement until authorized by the RPR. When a primer is recommended by the manufacturer, apply it evenly to the joint faces in accordance with the manufacturer's instructions. Check the joints frequently to ensure that the newly installed sealant is cured to a tack-free condition within the time specified.

605-3.5 Inspection. The Contractor shall inspect the joint sealant for proper rate of cure and set, bonding to the joint walls, cohesive separation within the sealant, reversion to liquid, entrapped air and voids. Sealants exhibiting any of these deficiencies at any time prior to the final acceptance of the project shall be removed from the joint, wasted, and replaced as specified at no additional cost to the airport.

605-3.6 Clean-up. Upon completion of the project, remove all unused materials from the site and leave the pavement in a clean condition.

METHOD OF MEASUREMENT AND PAYMENT

605-4.1 There shall be no separate measurement or payment for portland cement concrete pavement joint sealing, or concrete/asphalt juncture joint sealing if any. The cost of sealing work with hot-applied or cold-applied sealant shall be considered incidental to the price per square yard of pavement in Item P-501.

REFERENCES

The publications listed below form a part of this specification to the extent referenced. The publications are referred to within the text by the basic designation only.

ASTM International (ASTM)

ASTM D789	Standard Test Method for Determination of Relative Viscosity of Polyamide (PA)
ASTM D5249	Standard Specification for Backer Material for Use with Cold- and Hot-Applied Joint Sealants in Portland-Cement Concrete and Asphalt Joints
[ASTM D5893	Standard Specification for Cold Applied, Single Component, Chemically Curing Silicone Joint Sealant for Portland Cement Concrete Pavements **]**
[ASTM D6690	Standard Specification for Joint and Crack Sealants, Hot Applied, for Concrete and Asphalt]
[ASTM D7116	Standard Specification for Joint Sealants, Hot Applied, Jet Fuel Resistant Types for Portland Cement Concrete Pavements]

Advisory Circulars (AC)

AC 150/5340-30	Design and Installation Details for Airport Visual Aids

END ITEM P-605

Item P-610

Concrete for Miscellaneous Structures

DESCRIPTION

610-1.1 This item shall consist of concrete and reinforcement, as shown on the plans, prepared and constructed in accordance with these specifications. This specification shall be used for all concrete other than airfield pavement which are cast-in-place.

MATERIALS

610-2.1 General. Only approved materials, conforming to the requirements of these specifications, shall be used in the work. Materials may be subject to inspection and tests at any time during their preparation or use. The source of all materials shall be approved by the Resident Project Representative (RPR) before delivery or use in the work. Representative preliminary samples of the materials shall be submitted by the Contractor, when required, for examination and test. Materials shall be stored and handled to ensure preservation of their quality and fitness for use and shall be located to facilitate prompt inspection. All equipment for handling and transporting materials and concrete must be clean before any material or concrete is placed in them.

The use of pit-run aggregates shall not be permitted unless the pit-run aggregate has been screened and washed, and all fine and coarse aggregates stored separately and kept clean. The mixing of different aggregates from different sources in one storage stockpile or alternating batches of different aggregates shall not be permitted.

a. Reactivity. Fine aggregate and coarse aggregates to be used in all concrete shall have been tested separately within six months of the project in accordance with ASTM C1260. Test results shall be submitted to the RPR. The aggregate shall be considered innocuous if the expansion of test specimens, tested in accordance with ASTM C1260, does not exceed 0.08% at 14 days (16 days from casting). If the expansion either or both test specimen is greater than 0.08% at 14 days, but less than 0.20%, a minimum of 25% of Type F fly ash, or between 40% and 55% of slag cement shall be used in the concrete mix.

If the expansion is greater than 0.20% the aggregates shall not be used, and test results for other aggregates must be submitted for evaluation; or aggregates that meet P-501 reactivity test requirements may be utilized.

610-2.2 Coarse aggregate. The coarse aggregate for concrete shall meet the requirements of ASTM C33 and the requirements of Table 4, Class Designation 5S; and the grading requirements shown below, as required for the project.

Coarse Aggregate Grading Requirements

Maximum Aggregate Size	ASTM C33, Table 3 Grading Requirements (Size No.)
1 1/2 inch	467 or 4 and 67
1 inch	57
¾ inch	67
½ inch	7

610-2.2.1 Coarse Aggregate susceptibility to durability (D) cracking. Not used.

610-2.3 Fine aggregate. The fine aggregate for concrete shall meet all fine aggregate requirements of ASTM C33.

610-2.4 Cement. Cement shall conform to the requirements of **ASTM** Type **I or II**.

610-2.5 Cementitious materials.

a. Fly ash. Fly ash shall meet the requirements of ASTM C618, with the exception of loss of ignition, where the maximum shall be less than 6%. Fly ash shall have a Calcium Oxide (CaO) content of less than **[15%]** and a total available alkali content less than 3% per ASTM C311. Fly ash produced in furnace operations using liming materials or soda ash (sodium carbonate) as an additive shall not be acceptable. The Contractor shall furnish the previous three most recent, consecutive ASTM C618 reports for each source of fly ash proposed in the concrete mix, and shall furnish each additional report as they become available during the project. The reports can be used for acceptance or the material may be tested independently by the RPR.

b. Slag cement (ground granulated blast furnace (GGBF)). Slag cement shall conform to ASTM C989, Grade 100 or Grade 120. Slag cement shall be used only at a rate between 25% and 55% of the total cementitious material by mass.

610-2.6 Water. Water used in mixing or curing shall be from potable water sources. Other sources shall be tested in accordance with ASTM C1602 prior to use.

610-2.7 Admixtures. The Contractor shall submit certificates indicating that the material to be furnished meets all of the requirements indicated below. In addition, the RPR may require the Contractor to submit complete test data from an approved laboratory showing that the material to be furnished meets all of the requirements of the cited specifications. Subsequent tests may be made of samples taken by the RPR from the supply of the material being furnished or proposed for use on the work to determine whether the admixture is uniform in quality with that approved.

a. Air-entraining admixtures. Air-entraining admixtures shall meet the requirements of ASTM C260 and shall consistently entrain the air content in the specified ranges under field conditions. The air-entrainment agent and any water reducer admixture shall be compatible.

b. Water-reducing admixtures. Water-reducing admixture shall meet the requirements of ASTM C494, Type A, B, or D. ASTM C494, Type F and G high range water reducing admixtures and ASTM C1017 flowable admixtures shall not be used.

c. Other chemical admixtures. The use of set retarding, and set-accelerating admixtures shall be approved by the RPR. Retarding shall meet the requirements of ASTM C494, Type A, B, or D and set-accelerating shall meet the requirements of ASTM C494, Type C. Calcium chloride and admixtures containing calcium chloride shall not be used.

610-2.8 Premolded joint material. Premolded joint material for expansion joints shall meet the requirements of ASTM **D1751 or ASTM D1752.**

610-2.9 Joint filler. The filler for joints shall meet the requirements of Item P-605, unless otherwise specified.

610-2.10 Steel reinforcement. Reinforcing shall conformto the following requirements :

Reinforcing Steel	**ASTM A615, ASTM A706, ASTM A775, ASTM A934**
Welded Steel Wire Fabric	**ASTM A1064, ASTM A884**
Welded Deformed Steel Fabric	**ASTM A1064**
Bar Mats	**ASTM A184 or ASTM A704**

610-2.11 Materials for curing concrete. Curing materials shall conform to the following requirements:

Waterproof paper	**ASTM C171**
Clear or white Polyethylene Sheeting	**ASTM C171**
White-pigmented Liquid Membrane-Forming Compound, Type 2, Class B	**ASTM C309**

CONSTRUCTION METHODS

610-3.1 General. The Contractor shall furnish all labor, materials, and services necessary for, and incidental to, the completion of all work as shown on the drawings and specified here. All machinery and equipment used by the Contractor on the work, shall be of sufficient size to meet the requirements of the work. All work shall be subject to the inspection and approval of the RPR.

610-3.2 Concrete Mixture. The concrete shall develop a compressive strength of **4000** psi in 28 days as determined by test cylinders made in accordance with ASTM C31 and tested in accordance with ASTM C39. The concrete shall contain not less than 470 pounds of cementitious material per cubic yard. The water cementitious ratio shall not exceed 0.45 by weight. The air content of the concrete shall be 5% +/- 1.2% as determined by ASTM C231 and shall have a slump of not more than 4 inches as determined by ASTM C143.

610-3.3 Mixing. Concrete may be mixed at the construction site, at a central point, or wholly or in part in truck mixers. The concrete shall be mixed and delivered in accordance with the requirements of ASTM C94 or ASTM C685.

The concrete shall be mixed only in quantities required for immediate use. Concrete shall not be mixed while the air temperature is below 40°F without the RPRs approval. If approval is granted for mixing under such conditions, aggregates or water, or both, shall be heated and the concrete shall be placed at a temperature not less than 50°F nor more than 100°F. The Contractor shall be held responsible for any

defective work, resulting from freezing or injury in any manner during placing and curing, and shall replace such work at his expense.

Retempering of concrete by adding water or any other material is not permitted.

The rate of delivery of concrete to the job shall be sufficient to allow uninterrupted placement of the concrete.

610-3.4 Forms. Concrete shall not be placed until all the forms and reinforcements have been inspected and approved by the RPR. Forms shall be of suitable material and shall be of the type, size, shape, quality, and strength to build the structure as shown on the plans. The forms shall be true to line and grade and shall be mortar-tight and sufficiently rigid to prevent displacement and sagging between supports. The surfaces of forms shall be smooth and free from irregularities, dents, sags, and holes. The Contractor shall be responsible for their adequacy.

The internal form ties shall be arranged so no metal will show in the concrete surface or discolor the surface when exposed to weathering when the forms are removed. All forms shall be wetted with water or with a non-staining mineral oil, which shall be applied immediately before the concrete is placed. Forms shall be constructed so they can be removed without injuring the concrete or concrete surface.

610-3.5 Placing reinforcement. All reinforcement shall be accurately placed, as shown on the plans, and shall be firmly held in position during concrete placement. Bars shall be fastened together at intersections. The reinforcement shall be supported by approved metal chairs. Shop drawings, lists, and bending details shall be supplied by the Contractor when required.

610-3.6 Embedded items. Before placing concrete, all embedded items shall be firmly and securely fastened in place as indicated. All embedded items shall be clean and free from coating, rust, scale, oil, or any foreign matter. The concrete shall be spaded and consolidated around and against embedded items. The embedding of wood shall not be allowed.

610-3.7 Concrete Consistency. The Contractor shall monitor the consistency of the concrete delivered to the project site; collect each batch ticket; check temperature; and perform slump tests on each truck at the project site in accordance with ASTM C143.

610-3.8 Placing concrete. All concrete shall be placed during daylight hours, unless otherwise approved. The concrete shall not be placed until the depth and condition of foundations, the adequacy of forms and falsework, and the placing of the steel reinforcing have been approved by the RPR. Concrete shall be placed as soon as practical after mixing, but in no case later than one (1) hour after water has been added to the mix. The method and manner of placing shall avoid segregation and displacement of the reinforcement. Troughs, pipes, and chutes shall be used as an aid in placing concrete when necessary. The concrete shall not be dropped from a height of more than 5 feet. Concrete shall be deposited as nearly as practical in its final position to avoid segregation due to rehandling or flowing. Do not subject concrete to procedures which cause segregation. Concrete shall be placed on clean, damp surfaces, free from running water, or on a properly consolidated soil foundation.

610-3.9 Vibration. Vibration shall follow the guidelines in American Concrete Institute (ACI) Committee 309R, Guide for Consolidation of Concrete.

610-3.10 Joints. Joints shall be constructed as indicated on the plans.

610-3.11 Finishing. All exposed concrete surfaces shall be true, smooth, and free from open or rough areas, depressions, or projections. All concrete horizontal plane surfaces shall be brought flush to the proper elevation with the finished top surface struck-off with a straightedge and floated.

610-3.12 Curing and protection. All concrete shall be properly cured in accordance with the recommendations in American Concrete Institute (ACI) 308R, Guide to External Curing of Concrete. The concrete shall be protected from damage until project acceptance.

610-3.13 Cold weather placing. When concrete is placed at temperatures below 40°F, follow the cold weather concreting recommendations found in ACI 306R, Cold Weather Concreting.

610-3.14 Hot weather placing. When concrete is placed in hot weather greater than 85ºF, follow the hot weather concreting recommendations found in ACI 305R, Hot Weather Concreting.

QUALITY ASSURANCE (QA)

610-4.1 Quality Assurance sampling and testing. Concrete for each day's placement will be accepted on the basis of the compressive strength specified in paragraph 610-3.2. The RPR will sample the concrete in accordance with ASTM C172; test the slump in accordance with ASTM C143; **test air content in accordance with ASTM C231;** make and cure compressive strength specimens in accordance with ASTM C31; and test in accordance with ASTM C39. The QA testing agency will meet the requirements of ASTM C1077.

The Contractor shall provide adequate facilities for the initial curing of cylinders.

610-4.2 Defective work. Any defective work that cannot be satisfactorily repaired as determined by the RPR, shall be removed and replaced at the Contractor's expense. Defective work includes, but is not limited to, uneven dimensions, honeycombing and other voids on the surface or edges of the concrete.

MEASUREMENT AND PAYMENT

Structural Portland cement concrete, either non-reinforced or reinforced, will not be measured for payment. The cost of concrete, complete and accepted, shall be included in the various contract bid items requiring concrete.

REFERENCES

The publications listed below form a part of this specification to the extent referenced. The publications are referred to within the text by the basic designation only.

ASTM International (ASTM)

ASTM A184	Standard Specification for Welded Deformed Steel Bar Mats for Concrete Reinforcement
ASTM A615	Standard Specification for Deformed and Plain Carbon-Steel Bars for Concrete Reinforcement
ASTM A704	Standard Specification for Welded Steel Plain Bar or Rod Mats for Concrete Reinforcement
ASTM A706	Standard Specification for Low-Alloy Steel Deformed and Plain Bars for Concrete Reinforcement
ASTM A775	Standard Specification for Epoxy-Coated Steel Reinforcing Bars
ASTM A884	Standard Specification for Epoxy-Coated Steel Wire and Welded Wire Reinforcement
ASTM A934	Standard Specification for Epoxy-Coated Prefabricated Steel Reinforcing Bars

ASTM A1064	Standard Specification for Carbon-Steel Wire and Welded Wire Reinforcement, Plain and Deformed, for Concrete
ASTM C31	Standard Practice for Making and Curing Concrete Test Specimens in the Field
ASTM C33	Standard Specification for Concrete Aggregates
ASTM C39	Standard Test Method for Compressive Strength of Cylindrical Concrete Specimens
ASTM C94	Standard Specification for Ready-Mixed Concrete
ASTM C136	Standard Test Method for Sieve or Screen Analysis of Fine and Coarse Aggregates
ASTM C114	Standard Test Methods for Chemical Analysis of Hydraulic Cement
ASTM C136	Standard Test Method for Sieve Analysis of Fine and Coarse Aggregates
ASTM C143	Standard Test Method for Slump of Hydraulic-Cement Concrete
ASTM C150	Standard Specification for Portland Cement
ASTM C171	Standard Specification for Sheet Materials for Curing Concrete
ASTM C172	Standard Practice for Sampling Freshly Mixed Concrete
ASTM C231	Standard Test Method for Air Content of Freshly Mixed Concrete by the Pressure Method
ASTM C260	Standard Specification for Air-Entraining Admixtures for Concrete
ASTM C309	Standard Specification for Liquid Membrane-Forming Compounds for Curing Concrete
ASTM C311	Standard Test Methods for Sampling and Testing Fly Ash or Natural Pozzolans for Use in Portland-Cement Concrete
ASTM C494	Standard Specification for Chemical Admixtures for Concrete
ASTM C618	Standard Specification for Coal Fly Ash and Raw or Calcined Natural Pozzolan for Use in Concrete
ASTM C666	Standard Test Method for Resistance of Concrete to Rapid Freezing and Thawing
ASTM C685	Standard Specification for Concrete Made by Volumetric Batching and Continuous Mixing
ASTM C989	Standard Specification for Slag Cement for Use in Concrete and Mortars
ASTM C1017	Standard Specification for Chemical Admixtures for Use in Producing Flowing Concrete
ASTM C1077	Standard Practice for Agencies Testing Concrete and Concrete Aggregates for Use in Construction and Criteria for Testing Agency Evaluation
ASTM C1157	Standard Performance Specification for Hydraulic Cement
ASTM C1260	Standard Test Method for Potential Alkali Reactivity of Aggregates (Mortar-Bar Method)

ASTM C1365	Standard Test Method for Determination of the Proportion of Phases in Portland Cement and Portland-Cement Clinker Using X-Ray Powder Diffraction Analysis
ASTM C1602	Standard Specification for Mixing Water Used in the Production of Hydraulic Cement Concrete
ASTM D1751	Standard Specification for Preformed Expansion Joint Filler for Concrete Paving and Structural Construction (Nonextruding and Resilient Asphalt Types)
ASTM D1752	Standard Specification for Preformed Sponge Rubber Cork and Recycled PVC Expansion Joint Fillers for Concrete Paving and Structural Construction

American Concrete Institute (ACI)

ACI 305R	Hot Weather Concreting
ACI 306R	Cold Weather Concreting
ACI 308R	Guide to External Curing of Concrete
ACI 309R	Guide for Consolidation of Concrete

END OF ITEM P-610

Item P-620

Pavement Marking

DESCRIPTION

620-1.1 This item shall consist of the preparation and painting of numbers, markings, and stripes on the surface of runways, taxiways, and aprons, in accordance with these specifications and at the locations shown on the plans, or as directed by the Resident Project Representative (RPR). The terms "paint" and "marking material" as well as "painting" and "application of markings" are interchangeable throughout this specification.

MATERIALS

620-2.1 Materials acceptance. The Contractor shall furnish manufacturer's certified test reports, for materials shipped to the project. The certified test reports shall include a statement that the materials meet the specification requirements. This certification along with a copy of the paint manufacturer's surface preparation; marking materials, including adhesion, flow promoting and/or floatation additive; and application requirements must be submitted and approved by the Resident Project Representative (RPR) prior to the initial application of markings. The reports can be used for material acceptance or the RPR may perform verification testing. The reports shall not be interpreted as a basis for payment. The Contractor shall notify the RPR upon arrival of a shipment of materials to the site. All material shall arrive in sealed containers that are easily quantifiable for inspection by the RPR.

620-2.2 Marking materials.

Table 1. Marking Materials

Paint[1]				Glass Beads[2]	
Type	**Color**	**Fed Std. 595 Number**	**Application Rate Maximum**	**Type**	**Application Rate Minimum**
III	White	37925	90 ft^2/gal	III	8 lb/gal
III	Red	31136	90 ft^2/gal	I	5 lb/gal
III	Yellow	33538 or 33655	90 ft^2/gal	III	8 lb/gal
III	Black	37038	90 ft^2/gal	N/A	N/A

[1] See paragraph 620-2.2a

[2] See paragraph 620-2.2b

a. Paint. Paint shall be **waterborne** in accordance with the requirements of this paragraph. Paint colors shall comply with Federal Standard No. 595.

Waterborne. Paint shall meet the requirements of Federal Specification TT-P-1952F, Type I **or** Type III . The non-volatile portion of the vehicle for all paint types shall be composed of a 100% acrylic polymer as determined by infrared spectral analysis. The acrylic resin used for Type III shall be 100% cross linking acrylic as evidenced by infrared peaks at wavelengths 1568, 1624, and 1672 cm-l with intensities equal to those produced by an acrylic resin known to be 100% cross linking.

]

b. Reflective media. Glass beads for white and yellow paint shall meet the requirements for Federal Specification TT-B-1325D **Type III** .

Glass beads for red and pink paint shall meet the requirements for **Type I, Gradation A** .

Glass beads shall be treated with all compatible coupling agents recommended by the manufacturers of the paint and reflective media to ensure adhesion and embedment.

Glass beads shall not be used in black and green paint.

Type III glass beads shall not be used in red and pink paint.

CONSTRUCTION METHODS

620-3.1 Weather limitations. Painting shall only be performed when the surface is dry, and the ambient temperature and the pavement surface temperature meet the manufacturer's recommendations in accordance with paragraph 620-2.1. Painting operations shall be discontinued when the ambient or surface temperatures does not meet the manufacturer's recommendations. Markings shall not be applied when the wind speed exceeds 10 mph unless windscreens are used to shroud the material guns. Markings shall not be applied when weather conditions are forecasts to not be within the manufacturers' recommendations for application and dry time.

620-3.2 Equipment. Equipment shall include the apparatus necessary to properly clean the existing surface, a mechanical marking machine, a bead dispensing machine, and such auxiliary hand-painting equipment as may be necessary to satisfactorily complete the job.

The mechanical marker shall be an atomizing spray-type or airless type marking machine with automatic glass bead dispensers suitable for application of traffic paint. It shall produce an even and uniform film thickness and appearance of both paint and glass beads at the required coverage and shall apply markings of uniform cross-sections and clear-cut edges without running or spattering and without over spray. The marking equipment for both paint and beads shall be calibrated daily.

620-3.3 Preparation of surfaces. Immediately before application of the paint, the surface shall be dry and free from dirt, grease, oil, laitance, or other contaminates that would reduce the bond between the paint and the pavement. Use of any chemicals or impact abrasives during surface preparation shall be approved in advance by the RPR. After the cleaning operations, sweeping, blowing, or rinsing with pressurized water shall be performed to ensure the surface is clean and free of grit or other debris left from the cleaning process.

a. Preparation of new pavement surfaces. The area to be painted shall be cleaned by broom, blower, water blasting, or by other methods approved by the RPR to remove all contaminants, including PCC curing compounds, minimizing damage to the pavement surface.

b. Preparation of pavement to remove existing markings. Existing pavement markings shall be removed by rotary grinding, water blasting, or by other methods approved by the RPR minimizing damage to the pavement surface. The removal area may need to be larger than the area of the markings to eliminate ghost markings. After removal of markings on asphalt pavements, apply a fog seal or seal coat to 'block out' the removal area to eliminate 'ghost' markings.

c. Preparation of pavement markings prior to remarking. Prior to remarking existing markings, loose existing markings must be removed minimizing damage to the pavement surface, with a method approved by the RPR. After removal, the surface shall be cleaned of all residue or debris.

Prior to the application of markings, the Contractor shall certify in writing that the surface is dry and free from dirt, grease, oil, laitance, or other foreign material that would prevent the bond of the paint to the pavement or existing markings. This certification along with a copy of the paint manufactures application

and surface preparation requirements must be submitted to the RPR prior to the initial application of markings.

620-3.4 Layout of markings. The proposed markings shall be laid out in advance of the paint application. The locations of markings to receive glass beads shall be shown on the plans.

620-3.5 Application. A period of **24** days or as recommended by the manufacturer shall elapse between placement of surface course or seal coat and application of the permanent paint markings. Paint shall be applied at the locations and to the dimensions and spacing shown on the plans. Paint shall not be applied until the layout and condition of the surface has been approved by the RPR.

The edges of the markings shall not vary from a straight line more than 1/2 inch in 50 feet, and marking dimensions and spacing shall be within the following tolerances:

Marking Dimensions and Spacing Tolerance

Dimension and Spacing	**Tolerance**
36 inch or less	±1/2 inch
greater than 36 inch to 6 feet	±1 inch
greater than 6 feet to 60 feet	±2 inch
greater than 60 feet	±3 inch

The paint shall be mixed in accordance with the manufacturer's instructions and applied to the pavement with a marking machine at the rate shown in Table 1. The addition of thinner will not be permitted.

Glass beads shall be distributed upon the marked areas at the locations shown on the plans to receive glass beads immediately after application of the paint. A dispenser shall be furnished that is properly designed for attachment to the marking machine and suitable for dispensing glass beads. Glass beads shall be applied at the rate shown in Table 1. Glass beads shall not be applied to black paint or green paint. Glass beads shall adhere to the cured paint or all marking operations shall cease until corrections are made. Different bead types shall not be mixed. Regular monitoring of glass bead embedment and distribution should be performed.

620-3.6 Application--preformed thermoplastic airport pavement markings.

Preformed thermoplastic pavement markings not used.

620-3.7 Control strip. Prior to the full application of airfield markings, the Contractor shall prepare a control strip in the presence of the RPR. The Contractor shall demonstrate the surface preparation method and all striping equipment to be used on the project. The marking equipment must achieve the prescribed application rate of paint and population of glass beads (per Table 1) that are properly embedded and evenly distributed across the full width of the marking. Prior to acceptance of the control strip, markings must be evaluated during darkness to ensure a uniform appearance.

620-3.8 Retro-reflectance. Reflectance shall be measured with a portable retro-reflectometer meeting ASTM E1710 (or equivalent). A total of 6 reading shall be taken over a 6 square foot area with 3 readings taken from each direction. The average shall be equal to or above the minimum levels of all readings which are within 30% of each other.

Minimum Retro-Reflectance Values

Material	Retro-reflectance mcd/m^2/lux		
	White	**Yellow**	**Red**
Initial Type I	300	175	35
Initial Type III	600	300	35
Initial Thermoplastic	225	100	35
All materials, remark when less than[1]	100	75	10

[1] 'Prior to remarking determine if removal of contaminants on markings will restore retro-reflectance

620-3.9 Protection and cleanup. After application of the markings, all markings shall be protected from damage until dry. All surfaces shall be protected from excess moisture and/or rain and from disfiguration by spatter, splashes, spillage, or drippings. The Contractor shall remove from the work area all debris, waste, loose reflective media, and by-products generated by the surface preparation and application operations to the satisfaction of the RPR. The Contractor shall dispose of these wastes in strict compliance with all applicable state, local, and federal environmental statutes and regulations.

METHOD OF MEASUREMENT

620-4.1a The quantity of markings shall be paid for shall be measured `by the number of square feet of painting .`

620-4.1c The quantity of reflective media shall be considered incidental to the quantity of markings

620-4.1d The quantity of temporary markings to be paid for shall be the number of square feet of painting performed in accordance with the specifications and accepted by the RPR. Temporary marking includes surface preparation, application and complete removal of the temporary marking.

BASIS OF PAYMENT

620-5.1 This price shall be full compensation for furnishing all materials and for all labor, equipment, tools, and incidentals necessary to complete the item complete in place and accepted by the RPR in accordance with these specifications.

620-5.2ab Payment for markings shall be made at the contract price for by the number of square feet of painting .

620-5.3b Payment for reflective media shall be considered incidental to the unit cost of reflective pavement markings.

620-5.4d Temporary markings are not required.

Payment will be made under:

Item P-620-1	Non-Reflective Pavement Markings - per square foot
Item P-620-2	Reflective Pavement Markings - per square foot

Item P-620-3 Reflective Pavement Markings (Red Paint) - per square foot

REFERENCES

The publications listed below form a part of this specification to the extent referenced. The publications are referred to within the text by the basic designation only.

ASTM International (ASTM)

ASTM D476	Standard Classification for Dry Pigmentary Titanium Dioxide Products
ASTM D968	Standard Test Methods for Abrasion Resistance of Organic Coatings by Falling Abrasive
ASTM D1652	Standard Test Method for Epoxy Content of Epoxy Resins
ASTM D2074	Standard Test Method for Total, Primary, Secondary, and Tertiary Amine Values of Fatty Amines by Alternative Indicator Method
ASTM D2240	Standard Test Method for Rubber Property - Durometer Hardness
ASTM D7585	Standard Practice for Evaluating Retroreflective Pavement Markings Using Portable Hand-Operated Instruments
ASTM E303	Standard Test Method for Measuring Surface Frictional Properties Using the British Pendulum Tester
ASTM E1710	Standard Test Method for Measurement of Retroreflective Pavement Marking Materials with CEN-Prescribed Geometry Using a Portable Retroreflectometer
ASTM E2302	Standard Test Method for Measurement of the Luminance Coefficient Under Diffuse Illumination of Pavement Marking Materials Using a Portable Reflectometer
ASTM G154	Standard Practice for Operating Fluorescent Ultraviolet (UV) Lamp Apparatus for Exposure of Nonmetallic Materials

Code of Federal Regulations (CFR)

40 CFR Part 60, Appendix A-7, Method 24	Determination of volatile matter content, water content, density, volume solids, and weight solids of surface coatings
29 CFR Part 1910.1200	Hazard Communication

Federal Specifications (FED SPEC)

FED SPEC TT-B-1325D	Beads (Glass Spheres) Retro-Reflective
FED SPEC TT-P-1952F	Paint, Traffic and Airfield Marking, Waterborne
FED STD 595	Colors used in Government Procurement

Commercial Item Description

A-A-2886B	Paint, Traffic, Solvent Based

Advisory Circulars (AC)

AC 150/5340-1	Standards for Airport Markings

AC 150/5320-12	Measurement, Construction, and Maintenance of Skid Resistant Airport Pavement Surfaces

END OF ITEM P-620

Item F-162

Chain-Link Fence

DESCRIPTION

162-1.1 This item shall consist of furnishing and erecting a chain-link fence in accordance with these specifications, the details shown on the plans, and in conformity with the lines and grades shown on the plans or established by the RPR.

MATERIALS

162-2.1 Fabric. The fabric shall be woven with a 9-gauge galvanized steel wire in a 2-inch mesh and shall meet the requirements of ASTM A392.

162-2.2 Barbed wire. Barbed wire shall be 2-strand 12-1/2 gauge **zinc-coated]** wire with 4-point barbs and shall conform to the requirements of ASTM A121, Class 3, Chain Link Fence Grade.

162-2.3 Posts, rails, and braces. Line posts, rails, and braces shall conform to the requirements of ASTM F1043 or ASTM F1083 as follows:

- Galvanized tubular steel pipe shall conform to the requirements of Group IA, (Schedule 40) coatings conforming to Type A, or Group IC (High Strength Pipe), External coating Type B, and internal coating Type B or D.
- Roll Formed Steel Shapes (C-Sections) shall conform to the requirements of Group IIA, and be galvanized in accordance with the requirements of ASTM F1043, Type A.
- Hot-Rolled Shapes (H Beams) shall meet the requirements of Group III, and be galvanized in accordance with the requirements of ASTM F1043, Type A.
- Composite posts shall conform to the strength requirements of ASTM F1043 or ASTM F1083. The strength loss of composite posts shall not exceed 10% when subjected to 3,600 hours of exposure to light and water in accordance with ASTM G152, ASTM G153, ASTM G154, and ASTM G155.

The dimensions of the posts, rails, and braces shall be in accordance with Tables I through VI of Federal Specification RR-F-191/3.

162-2.4 Gates. Gate frames shall consist of **galvanized steel pipe** and shall conform to the specifications for the same material under paragraph 162-2.3. Gate frames shall be as specified in Item F-165 – Cantilever Gates for Chain Link Fence. The fabric shall be of the same type material as used in the fence.

162-2.5 Wire ties and tension wires. Wire ties for use in conjunction with a given type of fabric shall be of the same material and coating weight identified with the fabric type. Tension wire shall be 7-gauge marcelled steel wire with the same coating as the fabric type and shall conform to ASTM A824.

All material shall conform to Federal Specification RR-F-191/4.

162-2.6 Miscellaneous fittings and hardware. Miscellaneous steel fittings and hardware for use with **zinc-coated** steel fabric shall be of commercial grade steel or better quality, wrought or cast as appropriate to the article, and sufficient in strength to provide a balanced design when used in conjunction with fabric posts, and wires of the quality specified herein. **All steel fittings and hardware shall be protected with a zinc coating applied in conformance with ASTM A153.** Barbed wire support arms shall withstand a load of 250 pounds applied vertically to the outermost end of the arm.

162-2.7 Concrete. Concrete shall have a minimum 28-day compressive strength of 3000 psi.

162-2.8 Marking. Each roll of fabric shall carry a tag showing the kind of base metal (steel, aluminum, or aluminum alloy number), kind of coating, the gauge of the wire, the length of fencing in the roll, and the name of the manufacturer. Posts, wire, and other fittings shall be identified as to manufacturer, kind of base metal (steel, aluminum, or aluminum alloy number), and kind of coating.

CONSTRUCTION METHODS

162-3.1 General. The fence shall be constructed in accordance with the details on the plans and as specified here using new materials. All work shall be performed in a workmanlike manner satisfactory to the RPR. **The Contractor shall layout the fence line based on the plans.** The Contractor shall span the opening below the fence with barbed wire at all locations where it is not practical to conform the fence to the general contour of the ground surface because of natural or manmade features such as drainage ditches. The new fence shall be permanently tied to the terminals of existing fences as shown on the plans. The Contractor shall stake down the woven wire fence at several points between posts as shown on the plans.

The Contractor shall arrange the work so that construction of the new fence will immediately follow the removal of existing fences. The length of unfenced section at any time shall not exceed 300 feet. The work shall progress in this manner and at the close of the working day the newly constructed fence shall be tied to the existing fence.

162-3.2 Clearing fence line. Clearing shall consist of the removal of all stumps, brush, rocks, trees, or other obstructions that will interfere with proper construction of the fence. Stumps within the cleared area of the fence shall be grubbed or excavated. The bottom of the fence shall be placed a uniform distance above ground, as specified in the plans. When shown on the plans or as directed by the RPR, the existing fences which interfere with the new fence location shall be removed by the Contractor as a part of the construction work unless such removal is listed as a separate item in the bid schedule. All holes remaining after post and stump removal shall be refilled with suitable soil, gravel, or other suitable material and compacted with tampers.

The cost of removing and disposing of the material shall not constitute a pay item and shall be considered incidental to fence construction.

162-3.3 Installing posts. All posts shall be set in concrete at the required dimension and depth and at the spacing shown on the plans.

The concrete shall be thoroughly compacted around the posts by tamping or vibrating and shall have a smooth finish slightly higher than the ground and sloped to drain away from the posts. All posts shall be set plumb and to the required grade and alignment. No materials shall be installed on the posts, nor shall the posts be disturbed in any manner within seven (7) days after the individual post footing is completed.

Should rock be encountered at a depth less than the planned footing depth, a hole 2 inches larger than the greatest dimension of the posts shall be drilled to a depth of 12 inches. After the posts are set, the remainder of the drilled hole shall be filled with grout, composed of one part Portland cement and two parts mortar sand. Any remaining space above the rock shall be filled with concrete in the manner described above.

In lieu of drilling, the rock may be excavated to the required footing depth. No extra compensation shall be made for rock excavation.

162-3.4 Installing top rails. The top rail shall be continuous and shall pass through the post tops. The coupling used to join the top rail lengths shall allow for expansion.

162-3.5 Installing braces. Horizontal brace rails, with diagonal truss rods and turnbuckles, shall be installed at all terminal posts.

162-3.6 Installing fabric. The wire fabric shall be firmly attached to the posts and braced as shown on the plans. All wire shall be stretched taut and shall be installed to the required elevations. The fence shall

generally follow the contour of the ground, with the bottom of the fence fabric no less than one inch or more than 4 inches from the ground surface. Grading shall be performed where necessary to provide a neat appearance.

At locations of small natural swales or drainage ditches and where it is not practical to have the fence conform to the general contour of the ground surface, longer posts may be used and multiple strands of barbed wire stretched to span the opening below the fence. The vertical clearance between strands of barbed wire shall be 6 inches or less.

162-3.7 Electrical grounds. Electrical grounds shall be constructed **at 500 feet intervals.]** The ground shall be accomplished with a copper clad rod 8 feet long and a minimum of 5/8 inches in diameter driven vertically until the top is 6 inches below the ground surface. A No. 6 solid copper conductor shall be clamped to the rod and to the fence in such a manner that each element of the fence is grounded. Installation of ground rods shall not constitute a pay item and shall be considered incidental to fence construction. The Contractor shall comply with FAA-STD-019, Lightning and Surge Protection, Grounding, Bonding and Shielding Requirements for Facilities and Electronic Equipment, paragraph 4.2.3.8, Lightning Protection for Fences and Gates, when fencing is adjacent to FAA facilities.

162-3.8 Cleaning up. The Contractor shall remove from the vicinity of the completed work all tools, buildings, equipment, etc., used during construction. All disturbed areas shall be seeded per T-901.

METHOD OF MEASUREMENT

162-4.1 Chain-link fence will be measured for payment by the linear foot. Measurement will be along the top of the fence from center to center of end posts, excluding the length occupied by gate openings.

162-4.2 Gates will be measured as complete units.

BASIS OF PAYMENT

162-5.1 Payment for chain-link fence will be made at the contract unit price per linear foot.

162-5.2 Payment for vehicle or pedestrian gates will be made at the contract unit price for each gate.

The price shall be full compensation for furnishing all materials, and for all preparation, erection, and installation of these materials, and for all labor equipment, tools, and incidentals necessary to complete the item.

Payment will be made under:

Item F-162-1	Chain-Link Fence - per linear foot
Item F-162-2	Install High Density Polyethylene Slats in Existing Chain Link Fence – per linear foot
Item F-162-3	Temporary Chain-Link Fence - per linear foot
Item F-162-4	15’ Dual Swing Gates - per each

REFERENCES

The publications listed below form a part of this specification to the extent referenced. The publications are referred to within the text by the basic designation only.

ASTM International (ASTM)

ASTM A121	Standard Specification for Metallic-Coated Carbon Steel Barbed Wire
ASTM A153	Standard Specification for Zinc Coating (Hot-Dip) on Iron and Steel Hardware
ASTM A392	Standard Specification for Zinc-Coated Steel Chain-Link Fence Fabric
ASTM A491	Standard Specification for Aluminum-Coated Steel Chain-Link Fence Fabric
ASTM A824	Standard Specification for Metallic-Coated Steel Marcelled Tension Wire for Use with Chain Link Fence
ASTM B117	Standard Practice for Operating Salt Spray (Fog) Apparatus
ASTM F668	Standard Specification for Polyvinyl Chloride (PVC), Polyolefin and other Organic Polymer Coated Steel Chain-Link Fence Fabric
ASTM F1043	Standard Specification for Strength and Protective Coatings on Steel Industrial Fence Framework
ASTM F1083	Standard Specification for Pipe, Steel, Hot-Dipped Zinc-Coated (Galvanized) Welded, for Fence Structures
ASTM F1183	Standard Specification for Aluminum Alloy Chain Link Fence Fabric
ASTM F1345	Standard Specification for Zinc 5% Aluminum-Mischmetal Alloy Coated Steel Chain-Link Fence Fabric
ASTM G152	Standard Practice for Operating Open Flame Carbon Arc Light Apparatus for Exposure of Nonmetallic Materials
ASTM G153	Standard Practice for Operating Enclosed Carbon Arc Light Apparatus for Exposure of Nonmetallic Materials
ASTM G154	Standard Practice for Operating Fluorescent Ultraviolet (UV) Lamp Apparatus for Exposure of Nonmetallic Materials
ASTM G155	Standard Practice for Operating Xenon Arc Light Apparatus for Exposure of Nonmetallic Materials

Federal Specifications (FED SPEC)

FED SPEC RR-F-191/3	Fencing, Wire and Post, Metal (Chain-Link Fence Posts, Top Rails and Braces)
FED SPEC RR-F-191/4	Fencing, Wire and Post, Metal (Chain-Link Fence Accessories)

FAA Standard

FAA-STD-019	Lightning and Surge Protection, Grounding, Bonding and Shielding Requirements for Facilities and Electronic Equipment

FAA Orders

5300.38	AIP Handbook

END OF ITEM F-162

Item F-165

Cantilever Slide Gate

PART 1 - GENERAL:

1.01 SECTION INCLUDES:

A. The work in this section shall include furnishing all labor, materials, equipment and appliances necessary to complete cantilever slide gate in accordance with this specification section and drawings.

1.02 REFERENCES:

A. ASTM F2200 – Standard Specification for Automated Vehicular Gate Construction. See 2.01 D.

B. ASTM F 1184 – Standard Specification for Industrial and Commercial Horizontal Slide Gates, Type II, Class 2. See 3.02 B.

C. American Welding Society AWS D1.2 Structural Welding Code. See 2.01 C.

1.03 SUBMITTAL:

A. Product Data:

1. Provide manufacturer's catalog cuts with printed specifications and installation instructions.
2. Deliver two copies of operation and maintenance data covering the installed products. Manual to include parts list showing manufacturer's names and part numbers for the gate operator.

B. Shop Drawings:

1. Supply shop drawings showing the relationship of operating systems with gate components, including details of all major components.
2. Include complete details of gate construction, gate height and post spacing dimensions.
3.

C. Certification of Performance Criteria:

1. Manufacturer of gate system shall provide certification stating the gate system includes the following material components that provide superior performance and longevity. Alternate designs built to minimum standards that do not include these additional structural features shall not be accepted.
   a. Gate track system shall be keyed to interlock into gate frame member (providing 200% additional strength when compared to weld only keyless systems). When interlocked with and welded to the "keyed" frame top member, gate track forms a composite structure.
   b. Gate shall have a minimum counterbalance length of 50% opening width

which provides a 36% increase in lateral resistance (when compared to ASTM minimum of 40% counterbalance). If gate is ever to be automated, counterbalance section shall be filled with fabric or other specified material.

c. To provide superior structural integrity, intermediate vertical members shall be used - with spacing between verticals to be less than 50% of the gate frame height.

d. Entire gate frame (including counterbalance section) shall include 2 adjustable stainless or galvanized steel cables (minimum 3/16") per bay to allow complete gate frame adjustment (maintaining strongest structural square and level orientation).

e. Gate truck assemblies shall be tested for continuous duty and shall have precision ground and hardened components. Bearings shall be pre-lubricated and contain shock resistant outer races and captured seals.

f. Gate truck assemblies shall be supported by a minimum 5/8" plated steel bolt with self-aligning capability, rated to support a 2,000 # reaction load.

g. Hanger brackets shall be hot dipped galvanized steel with a minimum 3/8" thickness that is also gusseted for additional strength.

h. Gate top track and supporting hangar bracket assemblies shall be certified by a licensed professional engineer to withstand a 2,000 lb. vertical reaction load without exceeding allowable stresses.

D. Certifications:

1. Gate in compliance with ASTM F 2200, Standard Specification for Automated Vehicular Gate Construction per section 1.02 B.

2. The gate operator shall be in compliance with UL 325 as evidenced by UL listing label attached to gate operator. See 1.02 A

3. Gate manufacturer shall provide independent certification as to the use of a documented Welding Procedure Specification and Procedure Qualification Record to insure conformance to the AWS D1.2 welding code. Upon request, Individual Certificates of Welder Qualification documenting successful completion of the requirements of the AWS D1.2 code shall also be provided. See 1.02 D.

4. Manufacturer shall supply gate design performance certification as per section 1.03 C.

PART 2 - PRODUCTS:

A.

2.02 CANTILEVER SLIDE GATE:

A. Gate Width:

1. Heavy Duty Gate may be used for clear openings up to 30’ wide.

B. Heavy Duty Gate Frame:

1. The gate frame shall be fabricated from 6063-T6 aluminum alloy extrusions. The top member shall be a 3" x 5" (76mm x 127mm) aluminum structural channel/tube extrusion weighing not less than 3.0 lb/lf (4.4kg/m). To maintain structural integrity this frame member shall be "keyed" to interlock with the “keyed” track member. If fabricated as a single horizontal piece, the bottom member shall be a 2" x 5" (51mm x 127mm) aluminum structural tube weighing not less than 2.0 lb/lf (2.9kg/m). If fabricated in two horizontal pieces, the bottom member shall be a 5" (127mm) aluminum structural channel weighing not less than 2.6 lb/lf (3.8kg/m). When the gate frame is manufactured in two horizontal pieces or sections, they shall be spliced in the field (the gate frame shall be fabricated in one or multiple sections depending on size requirements or project constraints).
    a. Vertical Members: The vertical members at the ends of the gate frame shall be “P” shaped in cross section with a nominal base dimension of no less than 2” x 2” (51mm x 51mm) and weighing not less than 1.6 lb/lf (2.3kg/m). Major 2” x 2” (51mm x 51mm) vertical members weighing not less than 1.1 lb/lf shall separate each bay and shall be spaced at less than gate height intervals.

    b. Intermediate 1” x 2” (25mm x 51mm) vertical members weighing not less than
    .82 lb/lf shall alternate between 2” x 2” major members.

C. Gate Track:

1. The gate frame shall have a separate semi-enclosed “keyed” track, extruded from 6005A-T61 or 6105-T5 aluminum alloy, weighing not less than 2.9 lb/lf (4.2kg/m). The track member is to be located on only one side of the top primary. Welds to be placed alternately along the top and side of the track at 9" (229mm) centers with welds being a minimum of 2" (51mm).

D. All welds on the gate frame shall conform to Welding Procedure Specification and Procedure Qualification Record to insure conformance to the AWS D1.2 Structural Welding Code. All individual welders shall be certified to AWS D1.2 welding code. See 1.02 D.

E. Gate Mounting:

1. The gate frame is to be supported from the track by two (2) swivel type, self-aligning, 4-wheeled, sealed lubricant, ball-bearing truck assemblies.

2. The bottom of each support post shall have a bracket equipped with a pair of 3” (76mm) UHMW guide wheels Wheel cover protectors shall be included with bottom guides to comply with UL325.

3. Gap protectors shall be provided and installed, compliant with ASTM F 2200-05.

F. Diagonal Bracing:

1. Diagonal "X" bracing of 3/16" or 1/4” diameter stainless or galvanized steel cable shall be installed throughout the entire gate frame.

G. The gate shall be completed by installation of approved filler as specified.

1. Chain Link: 2” x 2” x 9 gauge aluminized steel chain link fabric shall extend the entire length of the gate (if operated gate, counterbalance must also have fabric to prevent reach through and comply with ASTM F2200, see 1.03 C.1) Fabric shall be attached at each end of the gate frame by standard fence industry tension bars and tied at each 2” x 2” (51mm x 51mm) vertical member with standard fence industry ties. ASTM F2200 requires attachment method that leaves no leading or bottom edge protrusions (cannot exceed 0.5 inch).

H. Posts:

1. A single set of support posts shall be minimum 4" O.D. (102mm) round SS40 or 4” x 4” x 3/16” wall square steel tubing, grade 500. Gate posts shall be galvanized or coated and supported in concrete footings as specified by the design team.

2.03 Finish:

A. Gate to be mill finish aluminum or color coated with polyester powder as specified. If powder coated, the gate (including track member) and all accessories shall be pretreated chemically by sand blasting or other acceptable method to ensure proper coating adherence.

2.04 WARRANTY:

A. The cantilever slide gate and operator system shall be warranted by the manufacturer against manufacturing defects for a period of (3) three years from date of sale. The truck assembly shall be warranted against manufacturing defects by the manufacturer for a period of (5) five years from date of sale.

PART 3 - EXECUTION:

3.01 SITE INSPECTION:

A. Examine final grades and installation conditions.

B. Do not begin work until all unsatisfactory conditions are corrected.

3.02 INSTALLATION:

A. Install equipment of this section in strict accordance with the company’s printed instructions unless otherwise shown on the contract drawings.

B. The gate and installation shall conform to ASTM F 1184 standards for aluminum cantilever slide gates, Type II, Class 2. See 1.02 C.

C. The gate system is to comply with ASTM F2200 and UL 325. See 1.02 B and 1.02 A.

D. Obstruction Sensing Systems:

1. The inherent motor current sensors are part of the gate operator system and may not be removed or bypassed.
2. The installing contractor shall be responsible to ensure that appropriate external secondary entrapment protection devices be installed for the specific site conditions to protect against all potential entrapment zones. Proper operation of these safety devices shall be verified and training as to the operation and maintenance of these devices for the users and owners shall be documented.

3.03 SYSTEM ACCEPTANCE & VALIDATION:

A. Acceptance Test:

1. Test each system function.
2. Supply all equipment necessary for system adjustment and testing.

B. Test and Explain Safety Features:

1. Each system feature and device is a separate component of the gate system.
2. Read and follow all instructions for each component.
3. Ensure that all instructions for mechanical components, safety devices and the gate operator are available for everyone who will be using the gate system.
4. The warning signs shipped with the gate operator must be installed in prominent position on both sides of the gate.

C. System Validation:

1. The complete system shall be adjusted to assure it is performing properly.
2. The system shall be operated for a sufficient period of time to determine that the system is in proper working order.Ensure the owner is clear with regard to the safety points concerning the basic operational guidelines of the safety features of the gate operator system. These safety points are listed in the operator manual and must be read prior to system use.
3. Installer and customer shall complete Operated Gate System Installation Checklist (see operator manual).

1.04 MEASUREMENT AND PAYMENT

A. Cantilever slide gates shall be measured for payment at the contract unit price for each gate assembly installed. This price shall be full compensation for furnishing all material, labor, tools, equipment, and incidentals needed to complete the item.

B. Relocation of the existing gate operator and power rack for the West Gate as identified on the plans shall be paid for at the contract lump sum price. This price shall include extending conduits and cables to the new location and making all connections to the new gate operator to provide a fully functional gate. This price shall be full compensation for furnishing all material, labor, tools, equipment, and incidentals needed to complete the item.

Payment will be made under:

F-165-1	Cantilever Slide Gate (15’ Opening) – per each
F-165-2	Cantilever Slide Gate (26’ Opening) – per each
F-165-3	Relocate Existing Gate Operator and Power Rack – per lump sum

END OF ITEM F-165

Item D-701

Pipe for Storm Drains and Culverts

DESCRIPTION

701-1.1 This item shall consist of the construction of pipe culverts and storm drains in accordance with these specifications and in reasonably close conformity with the lines and grades shown on the plans.

MATERIALS

701-2.1 Materials shall meet the requirements shown on the plans and specified below. Underground piping and components used in drainage systems for terminal and aircraft fueling ramp drainage shall be noncombustible and inert to fuel in accordance with National Fire Protection Association (NFPA) 415.

701-2.2 Pipe. The pipe shall be of the type called for on the plans or in the proposal and shall be in accordance with the following appropriate requirements:

AASHTO M294	Standard Specification for Corrugated Polyethylene Pipe, 300- to 1500-mm (12- to 60-in.) Diameter
ASTM C76	Standard Specification for Reinforced Concrete Culvert, Storm Drain, and Sewer Pipe

Ductile Iron Pipe for storm drains will meet Okaloosa County requirements for Buried Water and Sanitary Sewer Piping in Section 15051.**701-2.3 Concrete.** Not used.

701-2.4 Rubber gaskets. Rubber gaskets for rigid pipe shall conform to the requirements of ASTM C443. Rubber gaskets for PVC pipe, polyethylene, and polypropylene pipe shall conform to the requirements of ASTM F477. Rubber gaskets for zinc-coated steel pipe and precoated galvanized pipe shall conform to the requirements of ASTM D1056, for the "RE" closed cell grades. Rubber gaskets for steel reinforced thermoplastic ribbed pipe shall conform to the requirements of ASTM F477.

701-2.5 Joint mortar. Pipe joint mortar shall consist of one part Portland cement and two parts sand. The Portland cement shall conform to the requirements of ASTM C150, Type I. The sand shall conform to the requirements of ASTM C144.

701-2.6 Joint fillers. Not used.

701-2.7 Plastic gaskets. Plastic gaskets shall conform to the requirements of ASTM C990.

701-2.8. Controlled low-strength material (CLSM). Controlled low-strength material shall conform to the requirements of Item P-153. When CLSM is used, all joints shall have gaskets.

701-2.9 Precast box culverts. Manufactured in accordance with and conforming to ASTM C1433.

701-2.10 Precast concrete pipe. Precast concrete structures shall be furnished by a plant meeting National Precast Concrete Association Plant Certification Program or American Concrete Pipe Association QCast Plant Certification program.

CONSTRUCTION METHODS

701-3.1 Excavation. The width of the pipe trench shall be sufficient to permit satisfactory jointing of the pipe and thorough tamping of the bedding material under and around the pipe, but it shall not be less than

the external diameter of the pipe plus 12 inches on each side. The trench walls shall be approximately vertical.

The Contractor shall comply with all current federal, state and local rules and regulations governing the safety of men and materials during the excavation, installation and backfilling operations. Specifically, the Contractor shall observe that all requirements of the Occupational Safety and Health Administration (OSHA) relating to excavations, trenching and shoring are strictly adhered to. The width of the trench shall be sufficient to permit satisfactorily jointing of the pipe and thorough compaction of the bedding material under the pipe and backfill material around the pipe, but it shall not be greater than the widths shown on the plans trench detail.

Where rock, hardpan, or other unyielding material is encountered, the Contractor shall remove it from below the foundation grade for a depth of at least 8 inch or 1/2 inch for each foot of fill over the top of the pipe (whichever is greater) but for no more than three-quarters of the nominal diameter of the pipe. The excavation below grade should be filled with granular material to form a uniform foundation.

Where a firm foundation is not encountered at the grade established, due to soft, spongy, or other unstable soil, the unstable soil shall be removed and replaced with approved granular material for the full trench width. The RPR shall determine the depth of removal necessary. The granular material shall be compacted to provide adequate support for the pipe.

The excavation for pipes placed in embankment fill shall not be made until the embankment has been completed to a height above the top of the pipe as shown on the plans.

701-3.2 Bedding. The bedding surface for the pipe shall provide a foundation of uniform density to support the pipe throughout its entire length.

a. Rigid pipe. The pipe bedding shall be constructed uniformly for the full length of the pipe barrel, as required on the plans. The maximum aggregate size shall be 1 in when the bedding thickness is less than 6 inches, and 1-1/2 in when the bedding thickness is greater than 6 inches. Bedding shall be loosely placed uncompacted material under the middle third of the pipe prior to placement of the pipe.

b. Flexible pipe. For flexible pipe, the bed shall be roughly shaped to fit the pipe, and a bedding blanket of sand or fine granular material shall be provided as follows:

Flexible Pipe Bedding

Pipe Corrugation Depth		Minimum Bedding Depth	
inch	**mm**	**inch**	**mm**
1/2	12	1	25
1	25	2	50
2	50	3	75
2-1/2	60	3-1/2	90

c. Other pipe materials. For PVC, polyethylene, polypropylene, or fiberglass pipe, the bedding material shall consist of coarse sands and gravels with a maximum particle size of 3/4 inches. For pipes installed under paved areas, no more than 12% of the material shall pass the No. 200 sieve. For all other areas, no more than 50% of the material shall pass the No. 200 sieve. The bedding shall have a thickness of at least 6 inches below the bottom of the pipe and extend up around the pipe for a depth of not less than 50% of the pipe's vertical outside diameter.

701-3.3 Laying pipe. The pipe laying shall begin at the lowest point of the trench and proceed upgrade. The lower segment of the pipe shall be in contact with the bedding throughout its full length. Bell or groove ends of rigid pipes and outside circumferential laps of flexible pipes shall be placed facing upgrade.

Paved or partially lined pipe shall be placed so that the longitudinal center line of the paved segment coincides with the flow line.

Elliptical and elliptically reinforced concrete pipes shall be placed with the manufacturer's reference lines designating the top of the pipe within five degrees of a vertical plane through the longitudinal axis of the pipe.

701-3.4 Joining pipe. Joints shall be made with (1) cement mortar, (2) cement grout, (3) rubber gaskets, (4) plastic gaskets, (5) coupling bands.

Mortar joints shall be made with an excess of mortar to form a continuous bead around the outside of the pipe and shall be finished smooth on the inside. Molds or runners shall be used for grouted joints to retain the poured grout. Rubber ring gaskets shall be installed to form a flexible watertight seal.

a. Concrete pipe. Concrete pipe may be either bell and spigot or tongue and groove. Pipe sections at joints shall be fully seated and the inner surfaces flush and even. Concrete pipe joints shall be sealed with rubber gaskets meeting ASTM C443 when leak resistant joints are required.

.

701-3.5 Embedment and Overfill. Pipes shall be inspected before any fill material is placed; any pipes found to be out of alignment, unduly settled, or damaged shall be removed and re-laid or replaced at the Contractor's expense.

701-3.5-1 Embedment Material Requirements

a. Concrete Pipe. Embedment material and compaction requirements shall be in accordance with the applicable Type of Standard Installation (Types 1, 2, 3, or 4) per ASTM C1479. If a concrete cradle or CLSM embedment material is used, it shall conform to the plan details.

b. Plastic and fiberglass Pipe. Embedment material shall meet the requirements of ASTM D3282, A-1, A-2-4, A-2-5, or A-3. Embedment material shall be free of organic material, stones larger than 1.5 inches in the greatest dimension, or frozen lumps. Embedment material shall extend to 12 inches above the top of the pipe.

c. Metal Pipe. Embedment material shall be granular as specified in the contract document and specifications, and shall be free of organic material, rock fragments larger than 1.5 inches in the greatest dimension and frozen lumps. As a minimum, backfill materials shall meet the requirements of ASTM D3282, A-1, A-2, or A-3. Embedment material shall extend to 12 inches above the top of the pipe.

701-3.5-2 Placement of Embedment Material

The embedment material shall be compacted in layers not exceeding 6 inches on each side of the pipe and shall be brought up one foot above the top of the pipe or to natural ground level, whichever is greater. Thoroughly compact the embedment material under the haunches of the pipe without displacing the pipe. Material shall be brought up evenly on each side of the pipe for the full length of the pipe.

When the top of the pipe is above the top of the trench, the embedment material shall be compacted in layers not exceeding 6 inches and shall be brought up evenly on each side of the pipe to one foot above the top of the pipe. All embedment material shall be compacted to a density required under Item P-152.

Concrete cradles and flowable fills, such as controlled low strength material (CLSM) or controlled density fill (CDF), may be used for embedment provided adequate flotation resistance can be achieved by restraints, weighing, or placement technique.

It shall be the Contractor's responsibility to protect installed pipes and culverts from damage due to construction equipment operations. The Contractor shall be responsible for installation of any extra strutting or backfill required to protect pipes from the construction equipment.

701-3.6 Overfill

Pipes shall be inspected before any overfill is in place. Any pipes found to be out of alignment, unduly settled, or damaged shall be removed and relaid or replaced at the Contractor's expense. Evaluation of any damage to RCP shall be evaluated based on AASHTO R73.

Overfill material shall be place and compacted in layers as required to achieve compaction to at least 95 percent standard proctor per **ASTM D698** for pipes in the parking lot expansion area inPhase 1and **ASTM D1557** for all other pipe. The soil shall contain no debris, organic matter, frozen material, or stones with a diameter greater than one half the thickness of the compacted layers being placed.

701-3.7 Inspection Requirements

An initial post installation inspection shall be performed by the RPR no sooner than 30 days after completion of installation and final backfill. Clean or flush all lines prior to inspection.

Use a camera with lighting suitable to allow a clear picture of the entire periphery of the pipe interior. Center the camera in the pipe both vertically and horizontally and be able to pan and tilt to a 90 degree angle with the axis of the pipe rotating 360 degrees. Use equipment to move the camera through the pipe that will not obstruct the camera's view or interfere with proper documentation of the pipe's condition. The video image shall be clear, focused, and relatively free from roll, static, or other image distortion qualities that would prevent the reviewer from evaluating the condition of the pipe.

For pipe sizes larger than 48 inches, a walk-through visual inspection shall be performed.

Incorporate specific inspection requirements for the various types of pipes beneath the general inspection requirements.

Reinforced concrete pipe shall be inspected, evaluated, and reported on in accordance with ASTM C1840, "Standard Practice for Inspection and Acceptance of Installed Reinforced Concrete Culvert, Storm Drain, and Storm Sewer Pipe." Any issues reported shall include still photo and video documentation. The zoom ratio shall be provided for all still or video images that document any issues of concern by the inspection firm.

Flexible pipes shall be inspected for rips, tears, joint separations, soil migration, cracks, localized buckling, settlement, alignment, and deflection. Determine whether the allowable deflection has been exceeded by use of a laser profiler for internal pipe diameters of 48 inches or less, or direct measurement for internal pipe diameters greater than 48 inches. Laser profile equipment shall utilize low barrel distortion video equipment. Deflection of installed pipe shall not exceed the limits provided in the table below, as a percentage of the average inside diameter of the pipe.

Maximum Allowable Pipe Deflection

Type of Pipe	Maximum Allowable Deflection (%)
Thermoplastic Pipe	5

If deflection readings in excess of the allowable deflection are obtained, remove the pipe with excessive deflection and replace with new

pipe. Repair or replace any pipe with cracks exhibiting displacement across the crack, bulges, creases, tears, spalls, or delaminations. The report for flexible pipe shall include as a minimum, the deflection results and final post installation inspection report. The inspection report shall include: a copy of all video taken, pipe location identification, equipment used for inspection, inspector name, deviation from design line and grade, and inspector's notes.

METHOD OF MEASUREMENT

701-4.1 The length of pipe shall be measured in linear feet of pipe in place, completed, and accepted. It shall be measured along the centerline of the pipe from end or inside face of structure to the end or inside face of structure, whichever is applicable. The several classes, types and size of pipe shall be measured separately. All fittings shall be included in the footage as typical pipe sections in the pipe being measured.

BASIS OF PAYMENT

701-5.0 These prices shall fully compensate the Contractor for furnishing all materials and for all preparation, excavation, and installation of these materials; and for all labor, equipment, tools, and incidentals necessary to complete the item.

701-5.1 Payment will be made at the contract unit price per linear foot for each kind of pipe of the type and size designated..

Payment will be made under:

Item D-701-1	12 inch Class III RCP - per linear foot
Item D-701-2	12 inch Class V RCP - per linear foot
Item D-701-3	12 inch DIP - per linear foot
Item D-701-4	12 inch DIP in Existing PCC pavement - per linear foot
Item D-701-5	18 inch Class III RCP - per linear foot
Item D-701-6	18 inch Class V RCP - per linear foot
Item D-701-7	24 inch Class III RCP - per linear foot
Item D-701-8	24 inch Class V RCP - per linear foot
Item D-701-9	30 inch Class V RCP - per linear foot
Item D-701-10	36 inch Class V RCP - per linear foot
Item D-701-11	42 inch Class V RCP - per linear foot
Item D-701-12	54 inch Class IIII RCP - per linear foot
Item D-701-13	54 inch Type S CPP – per linear foot

REFERENCES

The publications listed below form a part of this specification to the extent referenced. The publications are referred to within the text by the basic designation only.

American Association of State Highway and Transportation Officials (AASHTO)

AASHTO M167	Standard Specification for Corrugated Steel Structural Plate, Zinc-Coated, for Field-Bolted Pipe, Pipe-Arches, and Arches
AASHTO M190	Standard Specification for Bituminous-Coated Corrugated Metal Culvert Pipe and Pipe Arches
AASHTO M196	Standard Specification for Corrugated Aluminum Pipe for Sewers and Drains
AASHTO M219	Standard Specification for Corrugated Aluminum Alloy Structural Plate for Field-Bolted Pipe, Pipe-Arches, and Arches
AASHTO M243	Standard Specification for Field Applied Coating of Corrugated Metal Structural Plate for Pipe, Pipe-Arches, and Arches
AASHTO M252	Standard Specification for Corrugated Polyethylene Drainage Pipe
AASHTO M294	Standard Specification for Corrugated Polyethylene Pipe, 300- to 1500-mm (12- to 60-in.) Diameter
AASHTO M304	Standard Specification for Poly (Vinyl Chloride) (PVC) Profile Wall Drain Pipe and Fittings Based on Controlled Inside Diameter
AASHTO MP20	Standard Specification for Steel Reinforced Polyethylene (PE) Ribbed Pipe, 300- to 900-mm (12- to 36-in.) Diameter

ASTM International (ASTM)

ASTM A760	Standard Specification for Corrugated Steel Pipe, Metallic Coated for Sewers and Drains
ASTM A761	Standard Specification for Corrugated Steel Structural Plate, Zinc Coated, for Field-Bolted Pipe, Pipe-Arches, and Arches
ASTM A762	Standard Specification for Corrugated Steel Pipe, Polymer Precoated for Sewers and Drains
ASTM A849	Standard Specification for Post-Applied Coatings, Pavings, and Linings for Corrugated Steel Sewer and Drainage Pipe
ASTM B745	Standard Specification for Corrugated Aluminum Pipe for Sewers and Drains
ASTM C14	Standard Specification for Nonreinforced Concrete Sewer, Storm Drain, and Culvert Pipe
ASTM C76	Standard Specification for Reinforced Concrete Culvert, Storm Drain, and Sewer Pipe
ASTM C94	Standard Specification for Ready Mixed Concrete
ASTM C144	Standard Specification for Aggregate for Masonry Mortar
ASTM C150	Standard Specification for Portland Cement
ASTM C443	Standard Specification for Joints for Concrete Pipe and Manholes, Using Rubber Gaskets
ASTM C506	Standard Specification for Reinforced Concrete Arch Culvert, Storm Drain, and Sewer Pipe

ASTM C507	Standard Specification for Reinforced Concrete Elliptical Culvert, Storm Drain and Sewer Pipe
ASTM C655	Standard Specification for Reinforced Concrete D-Load Culvert, Storm Drain and Sewer Pipe
ASTM C990	Standard Specification for Joints for Concrete Pipe, Manholes, and Precast Box Sections Using Preformed Flexible Joint Sealants
ASTM C1433	Standard Specification for Precast Reinforced Concrete Monolithic Box Sections for Culverts, Storm Drains, and Sewers
ASTM D1056	Standard Specification for Flexible Cellular Materials Sponge or Expanded Rubber
ASTM D3034	Standard Specification for Type PSM Poly (Vinyl Chloride) (PVC) Sewer Pipe and Fittings
ASTM D3212	Standard Specification for Joints for Drain and Sewer Plastic Pipes Using Flexible Elastomeric Seals
ASTM D3262	Standard Specification for "Fiberglass" (Glass-Fiber Reinforced Thermosetting Resin) Sewer Pipe
ASTM D3282	Standard Practice for Classification of Soils and Soil-Aggregate Mixtures for Highway Construction Purposes
ASTM D4161	Standard Specification for "Fiberglass" (Glass-Fiber Reinforced Thermosetting Resin) Pipe Joints Using Flexible Elastomeric Seals
ASTM D6690	Standard Specification for Joint and Crack Sealants, Hot Applied, for Concrete and Asphalt Pavements
ASTM F477	Standard Specification for Elastomeric Seals (Gaskets) for Joining Plastic Pipe
ASTM F667	Standard Specification for 3 through 24 in. Corrugated Polyethylene Pipe and Fittings
ASTM F714	Standard Specification for Polyethylene (PE) Plastic Pipe (DR PR) Based on Outside Diameter
ASTM F794	Standard Specification for Poly (Vinyl Chloride) (PVC) Profile Gravity Sewer Pipe & Fittings Based on Controlled Inside Diameter
ASTM F894	Standard Specification for Polyethylene (PE) Large Diameter Profile Wall Sewer and Drain Pipe
ASTM F949	Standard Specification for Poly (Vinyl Chloride) (PVC) Corrugated Sewer Pipe with a Smooth Interior and Fittings
ASTM F2435	Standard Specification for Steel Reinforced Polyethylene (PE) Corrugated Pipe
ASTM F2562	Specification for Steel Reinforced Thermoplastic Ribbed Pipe and Fittings for Non-Pressure Drainage and Sewerage
ASTM F2736	Standard Specification for 6 to 30 in. (152 to 762 mm) Polypropylene (PP) Corrugated Single Wall Pipe and Double Wall Pipe

ASTM F2764	Standard Specification for 30 to 60 in. (750 to 1500 mm) Polypropylene (PP) Triple Wall Pipe and Fittings for Non-Pressure Sanitary Sewer Applications
ASTM F2881	Standard Specification for 12 to 60 in. (300 to 1500 mm) Polypropylene (PP) Dual Wall Pipe and Fittings for Non-Pressure Storm Sewer Applications

National Fire Protection Association (NFPA)

NFPA 415	Standard on Airport Terminal Buildings, Fueling Ramp Drainage, and Loading Walkways

END ITEM D-701

Item D-751

Drainage Structures

DESCRIPTION

751-1.1 This item shall consist of construction of manholes, catch basins, inlets, and inspection holes, in accordance with these specifications, at the specified locations and conforming to the lines, grades, and dimensions shown on the plans or required by the RPR.

MATERIALS

751-2.1 Brick. The brick shall conform to the requirements of ASTM C32, Grade MS.

751-2.2 Mortar. Mortar shall consist of one part Portland cement and two parts sand. The cement shall conform to the requirements of ASTM C150, Type I. The sand shall conform to the requirements of ASTM C144.

751-2.3 Concrete. Plain and reinforced concrete used in structures, connections of pipes with structures, and the support of structures or frames shall conform to the requirements of Item P-610.

751-2.4 Precast concrete pipe manhole rings. Precast concrete pipe manhole rings shall conform to the requirements of ASTM C478. Unless otherwise specified, the risers and offset cone sections shall have an inside diameter of not less than 36 inches nor more than 48 inches. There shall be a gasket between individual sections and sections cemented together with mortar on the inside of the manhole. Gaskets shall conform to the requirements of ASTM C443.

751-2.5 Corrugated metal. Corrugated metal shall conform to the requirements of American Association of State Highway and Transportation Officials (AASHTO) M36.

751-2.6 Frames, covers, and grates. The castings shall conform to one of the following requirements:

a. ASTM A48, Class 35B: Gray iron castings

b. ASTM A47: Malleable iron castings

c. ASTM A27: Steel castings

d. ASTM A283, Grade D: Structural steel for grates and frames

e. ASTM A536, Grade 65-45-12: Ductile iron castings

f. ASTM A897: Austempered ductile iron castings

All castings or structural steel units shall conform to the dimensions shown on the plans and shall be designed to support the loadings, aircraft gear configuration and/or direct loading, specified.

Each frame and cover or grate unit shall be provided with fastening members to prevent it from being dislodged by traffic but which will allow easy removal for access to the structure.

All castings shall be thoroughly cleaned. After fabrication, structural steel units shall be galvanized to meet the requirements of ASTM A123.

751-2.7 Steps. The steps or ladder bars shall be gray or malleable cast iron or galvanized steel. The steps shall be the size, length, and shape shown on the plans and those steps that are not galvanized shall be given a coat of asphalt paint, when directed.

751-2.8 Precast inlet structures. Manufactured in accordance with and conforming to ASTM C913.

CONSTRUCTION METHODS

751-3.1 Unclassified excavation.

a. The Contractor shall excavate for structures and footings to the lines and grades or elevations, shown on the plans, or as staked by the RPR. The excavation shall be of sufficient size to permit the placing of the full width and length of the structure or structure footings shown. The elevations of the bottoms of footings, as shown on the plans, shall be considered as approximately only; and the RPR may direct, in writing, changes in dimensions or elevations of footings necessary for a satisfactory foundation.

b. Boulders, logs, or any other objectionable material encountered in excavation shall be removed. All rock or other hard foundation material shall be cleaned of all loose material and cut to a firm surface either level, stepped, or serrated, as directed by the RPR. All seams or crevices shall be cleaned out and grouted. All loose and disintegrated rock and thin strata shall be removed. Where concrete will rest on a surface other than rock, the bottom of the excavation shall not be disturbed and excavation to final grade shall not be made until immediately before the concrete or reinforcing is placed.

c. The Contractor shall do all bracing, sheathing, or shoring necessary to implement and protect the excavation and the structure as required for safety or conformance to governing laws. The cost of bracing, sheathing, or shoring shall be included in the unit price bid for the structure.

d. All bracing, sheathing, or shoring involved in the construction of this item shall be removed by the Contractor after the completion of the structure. Removal shall not disturb or damage finished masonry. The cost of removal shall be included in the unit price bid for the structure.

e. After excavation is completed for each structure, the Contractor shall notify the RPR. No concrete or reinforcing steel shall be placed until the RPR has approved the depth of the excavation and the character of the foundation material.

751-3.3 Concrete structures. Concrete structures which are to be cast-in-place within the project boundaries shall be built on prepared foundations, conforming to the dimensions and shape indicated on the plans. The construction shall conform to the requirements specified in Item P-610. Any reinforcement required shall be placed as indicated on the plans and shall be approved by the RPR before the concrete is placed.

All invert channels shall be constructed and shaped accurately to be smooth, uniform, and cause minimum resistance to flowing water. The interior bottom shall be sloped to the outlet.

751-3.4 Precast concrete structures. Precast concrete structures shall be furnished by a plant meeting National Precast Concrete Association Plant Certification Program or another RPR approved third party certification program.

Precast concrete structures shall conform to ASTM C478. Precast concrete structures shall be constructed on prepared or previously placed slab foundations conforming to the dimensions and locations shown on the plans. All precast concrete sections necessary to build a completed structure shall be furnished. The different sections shall fit together readily. Joints between precast concrete risers and tops shall be full-bedded in cement mortar and shall: (1) be smoothed to a uniform surface on both interior and exterior of the structure or (2) utilize a rubber gasket per ASTM C443. The top of the upper precast concrete section shall be suitably formed and dimensioned to receive the metal frame and cover or grate, or other cap, as required. Provision shall be made for any connections for lateral pipe, including drops and leads that may be installed in the structure. The flow lines shall be smooth, uniform, and cause minimum resistance to flow. The metal or metal encapsulated steps that are embedded or built into the side walls shall be aligned and placed in accordance to ASTM C478. When a metal ladder replaces the steps, it shall be securely fastened into position.

751-3.5 Corrugated metal structures. Corrugated metal structures shall be prefabricated. All standard or special fittings shall be furnished to provide pipe connections or branches with the correct dimensions and

of sufficient length to accommodate connecting bands. The fittings shall be welded in place to the metal structures. The top of the metal structure shall be designed so that either a concrete slab or metal collar may be attached to allow the fastening of a standard metal frame and grate or cover. Steps or ladders shall be furnished as shown on the plans. Corrugated metal structures shall be constructed on prepared foundations, conforming to the dimensions and locations as shown on the plans. When indicated, the structures shall be placed on a reinforced concrete base.

751-3.6 Inlet and outlet pipes. Inlet and outlet pipes shall extend through the walls of the structures a sufficient distance beyond the outside surface to allow for connections. They shall be cut off flush with the wall on the inside surface of the structure, unless otherwise directed. For concrete or brick structures, mortar shall be placed around these pipes to form a tight, neat connection.

751-3.7 Placement and treatment of castings, frames, and fittings. All castings, frames, and fittings shall be placed in the positions indicated on the plans or as directed by the RPR, and shall be set true to line and elevation. If frames or fittings are to be set in concrete or cement mortar, all anchors or bolts shall be in place before the concrete or mortar is placed. The unit shall not be disturbed until the mortar or concrete has set.

When frames or fittings are placed on previously constructed masonry, the bearing surface of the masonry shall be brought true to line and grade and shall present an even bearing surface so the entire face or back of the unit will come in contact with the masonry. The unit shall be set in mortar beds and anchored to the masonry as indicated on the plans or as directed by the RPR. All units shall set firm and secure.

After the frames or fittings have been set in final position, the concrete or mortar shall be allowed to harden for seven (7) days before the grates or covers are placed and fastened down.

751-3.8 Installation of steps. The steps shall be installed as indicated on the plans or as directed by the RPR. When the steps are to be set in concrete, they shall be placed and secured in position before the concrete is placed. When the steps are installed in brick masonry, they shall be placed as the masonry is being built. The steps shall not be disturbed or used until the concrete or mortar has hardened for at least seven (7) days. After seven (7) days, the steps shall be cleaned and painted, unless they have been galvanized.

When steps are required with precast concrete structures they shall meet the requirements of ASTM C478. The steps shall be cast into the side of the sections at the time the sections are manufactured or set in place after the structure is erected by drilling holes in the concrete and cementing the steps in place.

When steps are required with corrugated metal structures, they shall be welded into aligned position at a vertical spacing of 12 inches.

Instead of steps, prefabricated ladders may be installed. For brick or concrete structures, the ladder shall be held in place by grouting the supports in drilled holes. For metal structures, the ladder shall be secured by welding the top support to the structure and grouting the bottom support into drilled holes in the foundation or as directed by the RPR.

751-3.9 Backfilling.

a. After a structure has been completed, the area around it shall be backfilled with approved material, in horizontal layers not to exceed 8 inches in loose depth, and compacted to the density required in Item P-152. Each layer shall be deposited evenly around the structure to approximately the same elevation. The top of the fill shall meet the elevation shown on the plans or as directed by the RPR.

b. Backfill shall not be placed against any structure until approved by the RPR. For concrete structures, approval shall not be given until the concrete has been in place seven (7) days, or until tests establish that the concrete has attained sufficient strength to withstand any pressure created by the backfill and placing methods.

c. Backfill shall not be measured for direct payment. Performance of this work shall be considered an obligation of the Contractor covered under the contract unit price for the structure involved.

751-3.10 Cleaning and restoration of site. After the backfill is completed, the Contractor shall dispose of all surplus material, dirt, and rubbish from the site. Surplus dirt may be deposited in embankments, shoulders, or as approved by the RPR. The Contractor shall restore all disturbed areas to their original condition. The Contractor shall remove all tools and equipment, leaving the entire site free, clear, and in good condition.

METHOD OF MEASUREMENT

751-4.1 Manholes, inlets, and mitered end sections (MES) and shall be measured by the unit. Trench Drains will be measured by the linear foot.

BASIS OF PAYMENT

751-5.1 The accepted quantities of manholes, inlets, and mitered end sections (MES) will be paid for at the contract unit price per each in place when completed. Trench drains will be paid for a the contract unit price per linear foot in place when completed. This price shall be full compensation for furnishing all materials and for all preparation, excavation, backfilling, and placing of the materials; furnishing and installation of such specials and connections to pipes and other structures as may be required to complete the item as shown on the plans; and for all labor equipment, tools and incidentals necessary to complete the structure. For Trench Drain in Existing PCC Pavement, the contract price per linear foot will also include the cost of PCC pavement removal and new PCC pavement patch.

Payment will be made under:

Item D-751-1	Type C Inlet - per each
Item D-751-2	Type D Inlet – per each
Item D-751-3	Type 4 Airfield Inlet – per each
Item D-751-4	Trench Drain in Existing PCC Pavement – per linear foot
Item D-751-5	Airfield Trench Drain – per linear foot
Item D-751-6	Trench Drain Inlet – per each
Item D-751-7	Airfield Storm Drain Manhole – per each
Item D-751-8	Standard Storm Drain Manhole – per each
Item D-751-9	MES (4:1) for 18 inch RCP - per each
Item D-751-10	MES (4:1) for 24 inch RCP - per each
Item D-751-11	Concrete Flared End Section for 54” CMP – per each

REFERENCES

The publications listed below form a part of this specification to the extent referenced. The publications are referred to within the text by the basic designation only.

ASTM International (ASTM)

ASTM A27	Standard Specification for Steel Castings, Carbon, for General Application

ASTM A47	Standard Specification for Ferritic Malleable Iron Castings
ASTM A48	Standard Specification for Gray Iron Castings
ASTM A123	Standard Specification for Zinc (Hot-Dip Galvanized) Coatings on Iron and Steel Products
ASTM A283	Standard Specification for Low and Intermediate Tensile Strength Carbon Steel Plates
ASTM A536	Standard Specification for Ductile Iron Castings
ASTM A897	Standard Specification for Austempered Ductile Iron Castings
ASTM C32	Standard Specification for Sewer and Manhole Brick (Made from Clay or Shale)
ASTM C144	Standard Specification for Aggregate for Masonry Mortar
ASTM C150	Standard Specification for Portland Cement
ASTM C443	Standard Specification for Joints for Concrete Pipe and Manholes, Using Rubber Gaskets.
ASTM C478	Standard Specification for Precast Reinforced Concrete Manhole Sections
ASTM C913	Standard Specification for Precast Concrete Water and Wastewater Structures.

American Association of State Highway and Transportation Officials (AASHTO)

AASHTO M36	Standard Specification for Corrugated Steel Pipe, Metallic-Coated, for Sewers and Drains

END OF ITEM D-751

Item T-905

Topsoil

DESCRIPTION

905-1.1 This item shall consist of preparing the ground surface for topsoil application, removing topsoil from designated stockpiles or areas to be stripped on the site or from approved sources off the site, and placing and spreading the topsoil on prepared areas in accordance with this specification at the locations shown on the plans or as directed by the RPR. **Pre and Post topsoil stripping suveys will be performed as prescribed in paragraph 152-2.1 of Item P-152.**

MATERIALS

905-2.1 Topsoil. Topsoil shall be the surface layer of soil with no admixture of refuse or any material toxic to plant growth, and it shall be reasonably free from subsoil and stumps, roots, brush, stones (2 inches or more in diameter), and clay lumps or similar objects. Brush and other vegetation that will not be incorporated with the soil during handling operations shall be cut and removed. Ordinary sod and herbaceous growth such as grass and weeds are not to be removed, but shall be thoroughly broken up and intermixed with the soil during handling operations. Heavy sod or other cover, which cannot be incorporated into the topsoil by discing or other means, shall be removed. The topsoil or soil mixture, unless otherwise specified or approved, shall have a pH range of approximately 5.5 pH to 7.6 pH, when tested in accordance with the methods of testing of the Association of Official Agricultural Chemists in effect on the date of invitation of bids. The organic content shall be not less than 3% nor more than 20% as determined by the wet-combustion method (chromic acid reduction). There shall be not less than 20% nor more than 80% of the material passing the 200 mesh sieve as determined by the wash test in accordance with ASTM C117.

Natural topsoil may be amended by the Contractor with approved materials and methods to meet the above specifications.

905-2.2 Inspection and tests. Within 10 days following acceptance of the bid, the RPR shall be notified of the source of topsoil to be furnished by the Contractor. The topsoil shall be inspected to determine if the selected soil meets the requirements specified and to determine the depth to which stripping will be permitted. At this time, the Contractor may be required to take representative soil samples from several locations within the area under consideration and to the proposed stripping depths, for testing purposes as specified in paragraph 905-2.1.

CONSTRUCTION METHODS

905-3.1 General. Areas to be topsoiled shall be shown on the plans. If topsoil is available on the site, the location of the stockpiles or areas to be stripped of topsoil and the stripping depths shall be shown on the plans.

Suitable equipment necessary for proper preparation and treatment of the ground surface, stripping of topsoil, and for the handling and placing of all required materials shall be on hand, in good condition, and approved by the RPR before the various operations are started.

905-3.2 Preparing the ground surface. Immediately prior to dumping and spreading the topsoil on any area, the surface shall be loosened by discs or spike-tooth harrows, or by other means approved by the RPR, to a minimum depth of 2 inches to facilitate bonding of the topsoil to the covered subgrade soil. The surface

of the area to be topsoiled shall be cleared of all stones larger than 2 inches in any diameter and all litter or other material which may be detrimental to proper bonding, the rise of capillary moisture, or the proper growth of the desired planting. Limited areas, as shown on the plans, which are too compact to respond to these operations shall receive special scarification.

Grades on the area to be topsoiled, which have been established by others as shown on the plans, shall be maintained in a true and even condition. Where grades have not been established, the areas shall be smooth-graded and the surface left at the prescribed grades in an even and compacted condition to prevent the formation of low places or pockets where water will stand.

905-3.3 Obtaining topsoil. Prior to the stripping of topsoil from designated areas, any vegetation, briars, stumps and large roots, rubbish or stones found on such areas, which may interfere with subsequent operations, shall be removed using methods approved by the RPR. Heavy sod or other cover, which cannot be incorporated into the topsoil by discing or other means shall be removed.

When suitable topsoil is available on the site, the Contractor shall remove this material from the designated areas and to the depth as directed by the RPR. The topsoil shall be spread on areas already tilled and smooth-graded, or stockpiled in areas approved by the RPR. Any topsoil stockpiled by the Contractor shall be rehandled and placed without additional compensation. Any topsoil that has been stockpiled on the site by others, and is required for topsoil purposes, shall be removed and placed by the Contractor. The sites of all stockpiles and areas adjacent thereto which have been disturbed by the Contractor shall be graded if required and put into a condition acceptable for seeding.

When suitable topsoil is secured off the airport site, the Contractor shall locate and obtain the supply, subject to the approval of the RPR. The Contractor shall notify the RPR sufficiently in advance of operations in order that necessary measurements and tests can be made. The Contractor shall remove the topsoil from approved areas and to the depth as directed. The topsoil shall be hauled to the site of the work and placed for spreading, or spread as required. Any topsoil hauled to the site of the work and stockpiled shall be rehandled and placed without additional compensation.

905-3.4 Placing topsoil. The topsoil shall be evenly spread on the prepared areas to a uniform depth of 2 inches after compaction, unless otherwise shown on the plans or stated in the special provisions. Spreading shall not be done when the ground or topsoil is frozen, excessively wet, or otherwise in a condition detrimental to the work. Spreading shall be carried on so that turfing operations can proceed with a minimum of soil preparation or tilling.

After spreading, any large, stiff clods and hard lumps shall be broken with a pulverizer or by other effective means, and all stones or rocks (2 inches or more in diameter), roots, litter, or any foreign matter shall be raked up and disposed of by the Contractor. after spreading is completed, the topsoil shall be satisfactorily compacted by rolling with a cultipacker or by other means approved by the RPR. The compacted topsoil surface shall conform to the required lines, grades, and cross-sections. Any topsoil or other dirt falling upon pavements as a result of hauling or handling of topsoil shall be promptly removed.

METHOD OF MEASUREMENT

905-4.1 Topsoil obtained on the site shall be measured by the number of cubic yards of topsoil measured in its original position and stripped or excavated.

BASIS OF PAYMENT

905-5.1 Payment will be made at the contract unit price per cubic yard for topsoil (obtained on the site and either placed as topsoil or disposed of offsite). This price shall be full compensation for furnishing all

materials and for all preparation, placing, and spreading of the materials, and for all labor, equipment, tools, and incidentals necessary to complete the item.

Payment will be made under:

Item T-905	Topsoil (Obtained on Site) - per cubic yard

REFERENCES

The publications listed below form a part of this specification to the extent referenced. The publications are referred to within the text by the basic designation only.

ASTM International (ASTM)

ASTM C117	Materials Finer than 75 μm (No. 200) Sieve in Mineral Aggregates by Washing

Advisory Circulars (AC)

AC 150/5200-33	Hazardous Wildlife Attractants on or Near Airports

FAA/United States Department of Agriculture

Wildlife Hazard Management at Airports, A Manual for Airport Personnel

END OF ITEM T-905

SECTION 02606

SANITARY SEWER MANHOLES

PART 1 - GENERAL

1.1 DESCRIPTION

A. Scope: CONTRACTOR shall provide all labor, materials, equipment and incidentals as shown, specified and required to furnish and install all precast, cast- in-place and masonry manholes.

B. General:
   1. Manholes shall conform in shape, size, dimensions, material, and other respects to the details shown or as ordered by OCWS.
   2. Cast-iron frames, grates and covers shall be the standard frame and grate or cover unless otherwise shown.
   3. Concrete for cast-in-place manholes and for inverts in precast and masonry manholes shall be Class A and shall conform to the requirements specified under Section 03300.

C. Related Sections:
   1. Division 2 Sections on Earthwork.
   2. Section 03300, Cast-In-Place Concrete.
   3. Division 15 Sections on Piping.

1.2 QUALITY ASSURANCE

A. Reference Standards:
   1. ASTM C 32, Specification for Sewer and Manhole Brick (made from Clay or Shale).
   2. ASTM C 139, Specification for Concrete Masonry Units for Construction of Catch Basins and Manholes.
   3. ASTM C 140, Method of Sampling and Testing Concrete Masonry Units.
   4. ASTM C 207, Specification for Hydrated Lime for Masonry Purposes.
   5. ASTM C 478, Specification for Precast Reinforced Concrete Manhole Sections.
   6. AWWA C302, Reinforced Concrete Pressure Pipe, Noncylinder Type, for Water and Other Liquids.

1.3 SUBMITTALS

A. Shop Drawings: Submit for approval the following:
   1. Drawings showing design and construction details of all precast concrete and cast-in-place manholes including details of joints between the manhole bases and riser sections and stubs or openings for the connection of sewers.

PART 2 - PRODUCTS

2.1 PRECAST CONCRETE MANHOLES

A. Precast manholes shall conform to the details shown. Provide cast-in-place concrete bases where shown.

B. Except where otherwise specified precast manhole components shall consist of reinforced concrete pipe sections especially designed for manhole construction and manufactured in accordance with ASTM C 478 except as modified herein.

C. Precast, reinforced concrete manhole bases, riser sections, flat slabs and other components shall be manufactured by wet cast methods only, using forms which will provide smooth surfaces free from irregularities, honeycombing or other imperfections.

D. Joints between manhole components shall be the tongue and groove type employing a single, continuous rubber O-ring gasket and shall conform to AWWA C302. The circumferential and longitudinal steel reinforcement shall extend into the bell and spigot ends of the joint without breaking the continuity of the steel. Joints between the base sections, riser sections and top slabs of manholes 72 inches in diameter and less shall be rubber and concrete joints. Joints for manhole components greater than 72 inches in diameter shall be provided with steel bell and spigot rings.

E. All precast manhole components shall be of approved design and of sufficient strength to withstand the loads imposed upon them. They shall be designed for a minimum earth cover loading of 130 pounds per cubic foot, an H-20 wheel loading, and an allowance of 30 percent in roadways and 15 percent in rights-of- way for impact. Manhole bases shall have two cages of reinforcing steel in their walls, each of the area equal to that required in the riser sections. Wall thickness shall not be less than 5 inches. Concrete top slabs shall not be less than 8 inches thick.

F. Lifting holes, if used in manhole components, shall be tapered, and no more than two shall be cast in each section. Tapered, solid rubber plugs shall be furnished to seal the lifting holes. The lifting holes shall be made to be sealed by plugs driven from the outside face of the section only.

G. The point of intersection (P.I.) of the sewer pipe centerlines shall be marked with 1/4-inch diameter steel pin firmly enclosed in the floor of each manhole base and protruding approximately 1-inch above the finished floor of the base.

H. Mark date of manufacture and name or trademark of manufacturer on inside of barrel.

I. The barrel of the manhole shall be constructed of various lengths of riser pipe manufactured in increments of one foot to provide the correct height with the fewest joints. Openings in the barrel of the manholes for sewers or drop connections will not be permitted closer than one foot from the nearest joint. Special manhole base or riser sections shall be furnished as necessary to meet this requirement.

J. A precast or cast-in-place slab or precast eccentric cone, as shown or approved, shall be provided at the top of the manhole barrel to receive the cast iron frame and cover.

K. Manhole sections shall contain manhole steps, 12 inches on centers, accurately positioned and embedded in the concrete. Steps are specified under Section 05501.

2.2 MASONRY MANHOLES

A. Masonry manholes, where shown or otherwise approved by OCWS, shall conform to the

following:

1. Brick: Brick shall conform to the requirements of ASTM C 32, Grade SS for sewer brick and Grade MS for manhole brick.
2. Concrete Blocks: Concrete blocks shall be machine-made, solid segmental blocks not less than 8 inches wide and shaped so that the completed structure in which they are used will conform to the details shown or otherwise approved. Blocks shall be of compact texture and like blocks shall be uniform in shape and size.
3. Concrete blocks shall conform to ASTM C 139. Testing of blocks shall be done in accordance with ASTM C 140.
4. Mortar: The mortar shall be composed of portland cement, hydrated lime, and sand, in which the volume of sand shall not exceed three times the sum of the volumes of cement and lime.
5. Cement shall be Type II portland cement as specified for concrete masonry.
6. Hydrated lime shall be Type S conforming to ASTM C 207.
7. The sand shall comply with the Specifications for "Fine Aggregate" for concrete except that all of the sand shall pass a No. 8 sieve.

2.3 MISCELLANEOUS METALS

A. Metal frames, covers, steps, toe pockets and similar required items shall be provided as shown and in accordance with Division 5 Sections on Metal Fabrications.

2.4 DROP CONNECTIONS

A. Drop connections for manholes shall be constructed where shown or ordered and shall conform to the design and details shown. Pipe and fittings shall be ductile iron, reinforced concrete, or vitrified clay as shown or otherwise approved. Concrete for pipe encasement shall be as specified under Item P-610. Concrete shall be bonded to manhole in the manner shown or otherwise approved by OCWS.

PART 3 - EXECUTION

3.1 LAYING MASONRY

A. Brick shall be satisfactorily wet when being laid and each brick shall be laid in mortar so as to form full bed, end and side joints in one operation. The joints shall not be wider than 3/8-inch, except when the bricks are laid radially, in which case the narrowest part of the joint shall not exceed 1/4-inch. Masonry work shall be kept moist for a period of three days after completion, and precautions shall be taken to prevent freezing during cold weather.

B. For concrete block, the vertical keyways shall be completely filled with mortar.

C. Each grading ring shall be laid in a full bed of mortar and shall be thoroughly bonded.

3.2 PLASTERING

A. The outside of brick manholes, brick stacks and grading rings shall be neatly plastered with 1/2 inch of cement mortar as the Work progresses.

3.3 MANHOLE BASES

A. Cast-in-place bases shall be placed on suitable foundations after the pipes are laid. They shall be cast monolithically to an elevation at least 12 inches above the top of the highest pipe entering the manhole, except where a drop connection is to be installed. Base, walls and bottom shall be at least of the thickness shown and reinforced to withstand the loads to be expected. Connections for sewer pipes shall conform to the details shown.

B. Precast bases shall be set on a crushed stone or crushed gravel foundation as shown. Precast bases shall be set at the proper grade and carefully leveled and aligned.

3.4 PRECAST MANHOLE SECTIONS

A. Set sections vertical with steps and sections in true alignment. The base of the bell or groove end at joints between components shall be buttered with 1:2 cement-sand mortar to provide a uniform bearing between components. All joints shall be sealed with cement mortar inside and out and troweled smooth to the contour of the wall surface. Raised or rough joint finishes will not be accepted.

B. Install sections, joints and gaskets in accordance with manufacturers recommendations.

C. Lifting holes shall be sealed tight with a solid rubber plug driven into the hole from the outside of the barrel and the remaining void filled with 1 to 2 cement- sand mortar.

3.5 MANHOLE CHANNELS

A. All invert channels through manholes shall be constructed of Class A concrete. Channels shall be properly formed to the sizes, cross sections, grades and shapes shown or as ordered. Benches shall be built up to the heights shown or as ordered and given a uniform wood float finish. Care shall be taken to slope all benches for proper drainage to the invert channel.

3.6 GRADING RINGS

A. Grading rings or brick stacks shall be used for all precast and masonry manholes where required. Stacks or grade rings shall be a maximum of 12 inches in height, constructed on the roof slab or cone section on which the manhole frame and cover shall be placed. The height of the stack or grade rings shall be such as is necessary to bring the manhole frame to the proper grade.

B. Brick work shall be as specified in Articles 2.2 and 3.1 above.

3.7 STUBS FOR FUTURE CONNECTIONS

A. As shown or required for connections, cast iron sleeves, asbestos-cement couplings, bell end tile, ductile iron or reinforced concrete pipe stubs with approved watertight plugs shall be installed in manholes. Where pipe stubs, sleeves or couplings for future connections are shown or ordered, CONTRACTOR shall provide all materials and work for their construction.

3.8 GRADING AT MANHOLES

A. All manholes in unpaved areas shall be built as shown or directed to an elevation higher than the original ground. The ground surface shall be graded to drain away from the manhole. Fill shall be placed around manholes to the level of the upper rim of the manhole frame, and the surface evenly graded on a 1 to 5 slope to the existing surrounding ground

unless otherwise shown. The slop shall be covered with 4 inches of top soil, seeded and maintained until a satisfactory growth of grass is obtained.

B. Manholes in paved areas shall be constructed to meet the final surface grade. In paved areas on State Highways, all manholes shall be 1/2 inch below final wearing surfaces. Manholes shall not project above finished roadway pavements to prevent damage from snowplows.

C. CONTRACTOR shall be solely responsible for the proper height of all manholes necessary to reach the final grade at all locations. CONTRACTOR is cautioned that OCWS'S review of Shop drawings for manhole components will be general in nature and CONTRACTOR shall provide an adequate supply of random length precast manhole riser sections to adjust any manhole to meet field conditions for final grading.

3.9 MANHOLE WATERTIGHTNESS

A. All manholes shall be free of visible leakage. Each manhole shall be tested for leaks and inspected, and all leaks shall be repaired in a manner subject to OCWS' approval.

3.10 FLEXIBLE PIPE JOINT AT MANHOLE BASE

A. An approved flexible joint shall be provided between each pipe entering and exiting the manhole. This may be accomplished by the installation in the manhole base of the bell end of a pipe or by other means subject to approval of OCWS. Joints shall be similar to the approved pipe joints. The joint into the manhole base shall be completely watertight.

3.11 METHOD OF MEASUREMENT

A. Manholes shall be measured by the unit.

3.12 BASIS OF PAYMENT

A. The accepted quantities of manholes will be paid for at the contract unit price per each in place when completed. This price shall be full compensation for furnishing all materials and for all preparation, excavation, backfilling, and placing of the materials; furnishing and installation of such specials and connections to pipes and other structures as may be required to complete the item as shown on the plans; and for all labor equipment, tools and incidentals necessary to complete the structure.

Payment will be under:

02606-1	Standard Sanitary Sewer Manhole – per each
02606-2	Aircraft Rated Sanitary Sewer Manhole – per each

END OF SECTION 02606

SECTION 15051

BURIED WATER AND SANITARY SEWER PIPING

PART 1 - GENERAL

1.1 DESCRIPTION

A. Scope:

1. CONTRACTOR shall provide all labor, materials, equipment and incidentals as shown, specified and required to install and test all buried piping, fittings, and specials. The Work includes, but is not limited to, the following:
   a. All types and sizes of buried piping, except those specified under other Sections or other contracts.
   b. Piping beneath structures.
   c. Supports, restraints, and thrust blocks.
   d. Pipe encasements.
   e. Work on or affecting existing piping.
   f. Testing.
   g. Cleaning and disinfecting.
   h. Installation of all jointing and gasketing materials, specials, flexible couplings, mechanical couplings, harnessed and flanged adapters, sleeves, tie rods, and all other Work required to complete the buried piping installation.
   i. Incorporation of valves, meters and special items shown or specified into the piping systems as required and as specified in the appropriate Division 15 Sections.
   j. Unless otherwise specifically shown, specified, or included under other Sections, all buried piping Work required, beginning at the outside face of structures or structure foundations and extending away from structure.

B. Coordination:

1. Review installation procedures under other Sections and other contracts and coordinate with the Work that is related to this Section.
2. Section 15051 specifies the installation of all buried piping materials specified in Section 15052. Coordinate with this Section.

C. Related Sections:

1. Section 02220, Excavation and Backfill.
2. Section 03300, Cast-In-Place Concrete.
3. Section 09900, Painting.
4. Division 15, Sections on Piping, Valves and Appurtenances.

1.2 QUALITY ASSURANCE

A. Requirements of Regulatory Agencies:

1. Comply with requirements of NFPA Standard No. 24 for "Outside Protection" where applicable to water pipe systems used for fire protection.
2. Comply with requirements of UL, FM and other jurisdictional authorities, where

applicable.

3. Refer to the General and Supplementary Conditions regarding permit requirements for this Project.

B. Reference Standards: Comply with applicable provisions and recommendations of the following, except as otherwise shown or specified.

1. ASTM D 2321, Practice for Underground Installation of Flexible Thermoplastic Sewer Pipe.
2. ASTM D 2774, Practice for Underground Installation of Thermoplastic Pressure Piping.
3. AWWA C105, Polyethylene Encasement for Ductile-Iron Piping for Water and Other Liquids.
4. AWWA C111, Rubber-Gasket Joints for Ductile-Iron Pressure Pipe and Fittings.
5. AWWA C600, Installation of Ductile-Iron Water Mains and Their Appurtenances.
6. AWWA C606, Grooved and Shouldered Joints.
7. AWWA C651, Disinfecting Water Mains.
8. AWWA M23, PVC - Design and Installation.
9. ASCE MOP No. 37, Design and Construction of Sanitary and Storm Sewers.
10. NFPA 24, Private Fire Service Mains and Their Appurtenances.

1.3 SUBMITTALS

A. Shop Drawings: Submit for approval the following:

1. Full details of piping, specials, manholes, joints, harnessing and thrust blocks, and connections to existing piping, structures, equipment and appurtenances.

B. Tests: Submit description of proposed testing methods, procedures and apparatus. Prepare and submit report for each test.

C. Certificates: Submit certificates of compliance with referenced standards.

D. Record Drawings:

1. Submit record drawings prior to the time of Substantial Completion.

1.4 PRODUCT STORAGE AND HANDLING

A. Handle all pipe, fittings, specials and accessories carefully with approved handling devices. Do not drop or roll material off trucks. Do not otherwise drop, roll or skid piping.

B. Store pipes and fittings on heavy wood blocking or platforms so they are not in contact with the ground.

C. Unload pipe, fittings and specials opposite to or as close to the place where they are to be installed as is practical to avoid unnecessary handling. Keep pipe interiors completely free from dirt and foreign matter.

D. Inspect delivered pipe for cracked, gouged, chipped, dented or other damaged material and immediately remove from site.

PART 2 - PRODUCTS

2.1 MATERIALS

A. Approved pipe materials are listed in the Piping Schedule. Refer to applicable Sections for material specifications.

B. General:

1. Marking Piping:
    a. Clearly mark each piece of pipe or fitting with a designation conforming to those shown on the laying schedule.
    b. Cast or paint material, type and pressure designation on each piece of pipe or fitting 4 inches in diameter and larger.
    c. Pipe and fittings smaller than 4 inches in diameter shall be clearly marked by manufacturer as to material, type and rating.

PART 3 - EXECUTION

3.1 INSTALLATION

A. General:

1. Install piping as shown, specified and as recommended by the manufacturer.
2. If there is a conflict between manufacturer's recommendations and the Drawings or Specifications, request instructions from OCWS before proceeding
3. All trench excavations shall be inspected by OCWS prior to laying pipe. Notify OCWS in advance of excavating, bedding and pipe laying operations.
4. Minimum cover over piping shall be 3 feet unless otherwise shown or approved by OCWS.
5. Earthwork required is specified in the applicable Sections of Division 2.
6. Excavation in excess of that required or shown and which is not authorized by OCWS shall be replaced at CONTRACTOR'S expense with approved granular material. It shall be furnished, placed and compacted in accordance with the requirements of the applicable Section of Division 2.

B. Manufacturer's Installation Specialist:

1. Provide the services of a competent installation specialist of the pipe manufacturer when pipe laying commences for the following:
    a. Thermoplastic pipe.
2. Retain installation specialist at the site until competency of the pipe laying crew has been satisfactorily demonstrated.

C. Separation of Sewers and Potable Water Pipe Lines:

1. Horizontal and Vertical Separation:
    a. Wherever possible, existing and proposed potable water mains and service lines, and sanitary and storm sewers shall be separated horizontally by a clear distance of not less than 10 feet.
    b. If local conditions preclude a clear horizontal separation of not less 10 feet, the installation will be permitted provided the potable water main is in a separate trench or on a undistributed earth shelf located on one side of the sewer and at an elevation so the bottom of the potable water main is at least 18 inches above the top of the sewer.

c. Exception:
    1) Where it is not possible to provide the minimum horizontal and vertical separation described above, both the potable water main and sewer must be constructed of cement lined ductile iron slip-on or mechanical joint pipe complying with public water supply design standards of the agency. Both pipes shall be pressure tested in accordance with the requirements of the buried piping schedule, but in no case less than 150 psi, to assure water tightness before backfilling.

D. Crossings:
    a. Provide a minimum vertical distance of 18 inches between the outside of the potable water main and the outside of the sewer when a sewer or drain must cross over a potable water main.
    b. Center one full length section of potable water main over the sewer so that the sewer joints will be equidistant from the potable water main joints.
    c. Provide adequate structural support where a potable water main crosses under a sewer to maintain line and grade.
    d. Exceptions:
        1) Where it is not possible to provide the minimum horizontal and vertical separation described above, both the potable water main and sewer must be constructed of cement lined ductile iron pipe. Both pipes shall be pressure tested in accordance with the requirements of the buried piping schedule, but in no case less than 150 psi, to assure water tightness before backfilling.
        2) Encase either potable water main or sewer in a watertight carrier pipe, which extends 10 feet on both sides of the crossing, measured perpendicular to the potable water main.

E. Plugs:
    1. Temporarily plug installed pipe at the end of each day's work or other interruption to the installation of any pipe line. Plugging shall prevent the entry of animals, liquids or persons into the pipe or the entrance or insertion of deleterious materials.
    2. Install standard plugs into all bells at dead ends, tees or crosses. Cap all spigot ends.
    3. Fully secure and block all plugs and caps installed for pressure testing to withstand the specified test pressure.
    4. Where plugging is required for phasing of the Work or for subsequent connection of piping, install watertight, permanent type plugs.

F. Bedding Pipe: Bed pipe as specified below and in accordance with the details shown.
    1. Trench excavation and backfill, and bedding materials shall conform to the requirements of Section 02200, as applicable.
    2. Where the existing bedding material is deemed unsuitable by OCWS, remove and replace it with approved granular materials.
    3. Where pipe is installed in rock excavation, provide a minimum of 3 inches of crushed stone or gravel under pipes smaller than 4 inches in diameter and a minimum of 6 inches of crushed stone or gravel under pipes 4 inches in diameter and larger.
    4. Excavate trenches below the pipe bottom by an amount shown and specified.

Remove all loose and unsuitable material from the trench bottom.

5. Carefully and thoroughly compact all pipe bedding with hand held pneumatic compactors.
6. Do not lay pipe until OCWS approves the bedding condition. If a conflict exists obtain clarification from OCWS before proceeding.
7. No pipe shall be brought into position until the preceding length has been bedded and secured in its final position.

G. Laying Pipe:

1. Conform to manufacturer's instructions and requirements of the standards listed below, where applicable:
   a. Ductile Iron Pipe: AWWA C600, AWWA C105.
   b. Thermoplastic Pipe: ASTM D 2774.
   c. ASCE Manual of Practice No. 37.
2. Install all pipe accurately to line and grade shown unless otherwise approved by OCWS. Remove and relay pipes that are not laid correctly.
3. Slope piping uniformly between elevations shown.
4. Ensure that ground water level in trench is at least 6 inches below bottom of pipe before laying piping. Do not lay pipe in water. Maintain dry trench conditions until jointing and backfilling are complete and protect and keep clean water pipe interiors, fittings and valves.
5. Start laying pipe at lowest point and proceed towards the higher elevations, unless otherwise approved by OCWS.
6. Place bell and spigot pipe so that bells face the direction of laying, unless otherwise approved by OCWS.
7. Excavate around joints in bedding and lay pipe so that the barrel bears uniformly on the trench bottom.
8. Deflections at joints shall not exceed 75 percent of the amount allowed by the pipe manufacturer.
9. For thermoplastic piping, snake piping in trench to compensate for thermal expansion.
10. Carefully examine all pipe, fittings and specials for cracks, damage or other defects while suspended above the trench before installation. Immediately remove defective materials from site.
11. Inspect interior of all pipe and fittings and completely clean all dirt, gravel, sand, debris or other foreign material from pipe interior and joint recesses before it is moved into the trench. Bell and spigot mating surfaces shall be thoroughly wire brushed, and wiped clean and dry immediately before the pipe is laid.
12. Field cut pipe, where required, with a machine specially designed for cutting piping. Make cuts carefully, without damage to pipe or lining, and with a smooth end at right angles to the axis of pipe. Cut ends on push-on joint shall be tapered and sharp edges filed off smooth. Flame cutting will not be allowed.
13. Blocking under piping will not be permitted unless specifically approved by OCWS for special conditions. If permitted, conform to requirements of AWWA C600.
14. Touch up protective coatings in a satisfactory manner prior to backfilling.
15. CONTRACTOR shall notify OCWS in advance of backfilling operations.
16. On steep slopes, take measures acceptable to OCWS to prevent movement of the

pipe during installation.

17. Thrust Restraint: During the installation of the pipe, thrust blocks, tied joints, or proprietary restrained joint systems shall be provided wherever required for thrust restraint. Thrust restraint shall conform to the applicable requirements of Article 3.2.

H. Polyethylene Encasement:

1. Provide polyethylene encasement for ductile iron piping to prevent contact between the pipe and surrounding bedding material and backfill.
2. Polyethylene may be supplied in tubes or in sheet material.
3. Polyethylene encasement materials and installation shall be in accordance with the requirements of AWWA C105.

I. Jointing Pipe:

1. Ductile Iron Mechanical Joint Pipe:
   a. Wipe clean the socket, plain end and adjacent areas immediately before making joint. Make certain that cut ends are tapered and sharp edges are filed off smooth.
   b. Lubricate the plain ends and gasket with soapy water or an approved pipe lubricant, in accordance with AWWA C111, just prior to slipping the gasket onto the plain end of the joint assembly.
   c. Place the gland on the plain end with the lip extension toward the plain end, followed by the gasket with the narrow edge of the gasket toward the plain end.
   d. Insert the pipe into the socket and press the gasket firmly and evenly into the gasket recess. Keep the joint straight during assembly.
   e. Push gland toward socket and center it around pipe with the gland lip against the gasket.
   f. Insert bolts and hand tighten nuts.
   g. Make deflection after joint assembly, if required, but prior to tightening bolts. Alternately tighten bolts 180 degrees apart to seat the gasket evenly. The bolt torque shall be as follows:

Pipe Size (inches)	Bolt Size (inches)	Range of Torque (ft-lbs)
3	5/8	45-60
4-24	3/4	75-90
30-36	1	100-120
42-48	1-1/4	120-150

2. Ductile Iron Push-On Joint Pipe:
   a. Prior to assembling the joints, the last 8 inches of the exterior surface of the spigot and the interior surface of the bell shall be thoroughly cleaned with a wire brush, except where joints are lined or coated with a special protective lining or coating.
   b. Rubber gaskets shall be wiped clean and flexed until resilient. Refer to manufacturer's instructions for procedures to ensure gasket resiliency when assembling joints in cold weather.

c. Insert gasket into joint recess and smooth out the entire circumference of the gasket to remove bulges and to prevent interference with the proper entry of the spigot of the entering pipe.

d. Immediately prior to joint assembly, apply a thin film of approved lubricant to the surface of the gasket, which will come in contact with the entering spigot end of pipe. CONTRACTOR may, at his option, apply a thin film of lubricant to the outside of the spigot of the entering pipe.

e. For assembly, center spigot in the pipe bell and push pipe forward until it just makes contact with the rubber gasket. After gasket is compressed and before pipe is pushed or pulled all the way home, carefully check the gasket for proper position around the full circumference of the joint. Final assembly shall be made by forcing the spigot end of the entering pipe past the rubber gasket until it makes contact with the base of the bell. When more than a reasonable amount of force is required to assemble the joint, the spigot end of the pipe shall be removed to verify the proper positioning of the rubbergasket. Gaskets, which have been scoured or otherwise damaged, shall not be used.

f. Maintain an adequate supply of gaskets and joint lubricant at the site at all times when pipe jointing operations are in progress.

3. Proprietary Joints:

a. Pipe which utilizes proprietary joints such as Fastite, by American Cast Iron Pipe Company, Tyton by U.S. Pipe Incorporated, restrained joints described under Paragraph 3.2.D., or other such joints shall be installed in strict accordance with the manufacturer's instructions.

4. Flanged Joints:

a. Assemble flanged joints using 1/8-inch ring-type gaskets for raised face flanges. Use full face gaskets for flat face flanges, unless otherwise approved by OCWS. Gaskets shall be suitable for the service intended in accordance with the manufacturer's ratings and instructions. Gaskets shall be properly centered.

b. Bolts shall be tightened in a sequence, which will insure equal distribution of bolt loads.

c. The length of bolts shall be uniform, and they shall not project beyond the nut more than 1/4-inch or fall short of the nut when fully taken up. The ends of bolts shall be machine cut so as to be neatly rounded. No washers shall be used.

d. Bolt threads and gasket faces for flanged joints shall be lubricated prior to assembly.

e. After assembly, coat all bolts and nuts with two 8-mil coats of a high- build epoxy or bituminous coating as manufactured by Tnemec, or equal.

5. Thermoplastic Pipe Joints:

a. Solvent Cement Joints:

1) Bevel pipe ends and remove all burrs before making joints. Clean both pipe and fittings thoroughly. Do not attempt to make solvent cement joints if temperature is below 40 F nor in wet conditions.

2) Use solvent cement supplied or recommended by the pipe manufacturer.

3) Apply joint primer and solvent cement and assemble joints in strict accordance with the recommendations and instructions of the

manufacturer of the joint materials and the pipe manufacturer.

4) Observe safety precautions with the use of joint primers and solvent cements. Allow air to circulate freely through pipelines to permit solvent vapors to escape. Slowly admit water when flushing or filling pipelines to prevent compression of gases within pipes.

b. Push-On Joints:

1) Bevel all field-cut pipe, remove all burrs and provide a reference mark the correct distance from the pipe end.

J. Clean the pipe end and the bell thoroughly before making the joint. Insert the O-ring gasket, making certain it is properly oriented. Lubricate the spigot well with an approved lubricant; do not lubricate the bell or O-ring. Insert the spigot end of the pipe carefully into the bell until the reference mark on the spigot is flush with the bell.Backfilling:

1. Conform to the applicable requirements of Section 02220 or 02223.

2. Place backfill as construction progresses. Backfill by hand and use power tampers until pipe is covered by at least one foot of fill.

K. Connections to Valves and Hydrants:

1. Install valves and hydrants as shown.
2. Provide suitable adapters when valves or hydrants and piping have different joint types.
3. Provide thrust restraint at all hydrants and at valves at pipeline terminations.

L. Transitions from One Type of Pipe to Another:

1. Provide all necessary adapters, specials and connection pieces required when connecting different types and sizes of pipe or connecting pipe made by different manufacturers.

M. Closures:

1. Provide all closure pieces shown or required to complete the Work.

3.2 THRUST RESTRAINT

A. Provide thrust restraint on all pressure piping systems and where otherwise shown and specified.

B. Thrust restraint may be accomplished by means of restrained pipe joints, or by concrete thrust blocks. Thrust restraints shall be designed for the axial thrust exerted by the test pressure specified in the "Buried Piping Schedule".

C. Place concrete thrust blocks against undisturbed soil. Where undisturbed soil does not exist, or for projects where the site consists of fill material, thrust restraint shall be provided by restrained pipe joints.

D. Restrained Pipe Joints:

1. Pipe joints shall be restrained by means suitable for the type of pipe being installed.

a. Restrain ductile iron push-on joints and mechanical joints utilizing a proprietary restrained joint system such as American Lok-Ring, Lok-Fast, Lok-Set; U.S. Pipe Field Lok Gasket, U.S. Pipe TR Flex System; lugs and tie rods, or other systems approved by OCWS.

b. Where push-on type or other non-restrained joints are utilized for thermoplastic piping, CONTRACTOR shall provide tie rods or other suitable joint restraint system, subject to the approval of OCWS.

E. Concrete Thrust Blocks:

1. Provide concrete thrust blocks on pressure piping at all changes in alignment of 15 degrees or more, at all tees, plugs and caps and where shown. Construct thrust blocks of Class B concrete.
2. Install thrust blocks against undisturbed soil. Place concrete so that pipe and fitting joints will be accessible for repair.
3. Size concrete thrust blocks as shown or as approved by OCWS.

3.3 WORK AFFECTING EXISTING PIPING

A. Location of Existing Piping:

1. Locations of existing piping shown should be considered approximate.
2. CONTRACTOR shall determine the true location of existing piping to which connections are to be made, and location of other facilities which could be disturbed during earthwork operations, or which may be affected by CONTRACTOR'S Work in anyway.
3. Conform to applicable requirements of Division 1 pertaining to cutting and patching, and connections to existing facilities.

B. Taking Existing Pipelines Out of Service:

1. Do not take pipelines out of service unless approved by OCWS.
2. Notify OCWS at least 48 hours prior to taking pipeline out of service.

C. Work on Existing Pipelines:

1. Cut or tap pipes as shown or required with machines specifically designed for this work.
2. Install temporary plugs to prevent entry of mud, dirt, water and debris.
3. Provide all necessary adapters, fittings, pipe and appurtenances required to complete the Work.

3.4 TESTING OF PIPING

A. General:

1. Test all piping except as may be exempted in the Schedule.
2. Notify OCWS and local authorities having jurisdiction at least 48 hours in advance of testing if their presence is required.
3. Conduct all tests in the presence of OCWS.
4. Remove or protect any pipeline-mounted devices which may be damaged by the test pressure.
5. Provide all apparatus and services required for testing, including but not limited to, the following:
   a. Test pumps, bypass pumps, hoses, calibrated gauges, meters, test containers, valves and fittings.
   b. Temporary bulkheads, bracing, blocking and thrust restraints.
6. Provide air if an air test is required and power if pumping is required.
7. Unless otherwise approved by OCWS, CONTRACTOR will provide fluid required for testing.
8. Repair observed leaks and any pipeline failing to meet acceptance criteria. Retest after repair.

B. Test Schedule:

1. Refer to the Piping Schedule for the type of test required and the required hydrostatic test pressure.
2. Unless otherwise specified, the required hydrostatic test pressures are at the lowest elevation of the pipeline.
3. For piping not listed in the Schedule:
   a. Hydrostatically test pipe that will be operating at a pressure greater than 5 psig.
   b. Use exfiltration testing or low-pressure air testing for all other piping.
4. Hydrostatic Test Pressure:
   a. Use test pressures listed in the Schedule.
   b. If a test pressure is not listed in the Schedule, or if a hydrostatic test is required for piping not listed in the Schedule, the test pressure will be determined by the OCWS based on the maximum anticipated sustained operating pressure and the methods described in the AWWA Manual or Standard which applies to the piping system.

C. Hydrostatic Testing:

1. Preparation for Testing:
   a. For plastic pipe, follow procedures described in Section 7 of AWWA Standard C605.
   b. Ensure that adequate thrust protection is in place and that all joints are properly installed.
   c. Special requirements:
2. Test Procedure:
   a. Fill pipeline slowly to minimize air entrapment and surge pressures. Fill rate should not exceed one foot per second in the pipe being tested.
   b. Examine exposed joints and valves, and correct visible leakage.
   c. After the wetting period prescribed above, add fluid to pressurize line to the required test pressure. Maintain test pressure for a stabilization period of 10 minutes before beginning test.
   d. After the stabilization period, maintain test pressure for a two-hour period. Add fluid to restore test pressure if pressure drops 5 psi below test pressure at any time during the test period.
   e. Pump from a test container to maintain test pressure. Measure the volume of fluid pumped from the container and record on the test report. Record pressure at the test pump at 15 minute intervals for the duration of the test.
3. Allowable Leakage Rates: Leakage is defined as the quantity of fluid that must be supplied to the pipeline or any section thereof to maintain pressure within 5 psi of the test pressure during a two-hour period. The two-hour test period shall not begin until after the pipe has been filled, exposed to the required wetting period, air has been expelled and pressure has been stabilized. Allowable leakage rates for piping system are listed below:
   a. No Leakage: Pipe with flanged or fused joints.
   b. Rates based on the formula or table in AWWA Manual M41:
      1) Metal pipe joined with rubber gaskets as sealing members. This includes the following joint types:
         - Push-on joints.

- Mechanical joints.
- Bolted sleeve type couplings.
- Grooved and shouldered couplings.

c. Rates based on the formula or table in AWWA Standard 605:
   1) Plastic pipe joined with O-ring gasket sealing members.

D. Exfiltration Testing:
   1. Plug and bulkhead the section of pipe to be tested at both ends and admit fluid until the pipe is full.
   2. Provide a minimum head of 2 feet above the crown of the pipe at the upstream end.
   3. Add fluid from a test container or from a metered supply as required to maintain the level within 3 inches of the minimum head throughout the test duration.
   4. Test duration shall not be less than 2 hours.
   5. Allowable Leakage Rates:
      a. Leakage is defined as the quantity of fluid that must be supplied to the pipeline or any section thereof to maintain the head within 3 inches of the test elevation during the test duration after the pipe has been filled and exposed to the required wetting period plus the quantity required to refill to the original head.
      b. Leakage shall not be greater than that allowed by the regulatory agency having jurisdiction.

E. Low Pressure Air Testing:
   1. Test in accordance with requirements of the regulatory agency.
   2. If there are no regulatory requirements use test procedures described in ASTM Standards:
      a. ASTM F1417 – For thermoplastic pipe.

3.5 CLEANING AND DISINFECTION

A. Cleaning:
   1. Thoroughly clean all piping and flush in a manner approved by OCWS, prior to placing in service.
   2. If piping which requires disinfection has not been kept clean during storage or installation, CONTRACTOR shall swab each section individually before installation with a five percent hypochlorite solution, to ensure clean piping.

B. Disinfection:
   1. Disinfect all potable and finished water piping.
   2. A suggested procedure for accomplishing complete and satisfactory disinfection is specified below. Other procedures will be considered for approval by OCWS.
      a. Thoroughly flush piping prior to disinfection with water.
      b. Conform to procedures described in AWWA C651. Continuous feed method of disinfecting shall be used unless alternative method is acceptable to OCWS.
   3. Water for initial flushing, testing and chlorination will be furnished by the CONTRACTOR. CONTRACTOR shall provide all temporary piping, hose, valves, appurtenances and services required. Cost of water required for redisinfection will be paid by CONTRACTOR to OWNER at OWNER'S standard rates.

4. Chlorine will be supplied by CONTRACTOR.
5. Bacteriologic tests will be performed by OWNER. A certified test laboratory report will be made available to CONTRACTOR, if requested.
6. Chlorine concentration in the water entering the piping shall be between 50 and 100 parts per million, such that a minimum residual concentration of 25 mg/l will be left after a 24-hour retention period. Care shall be taken to ensure disinfection of the piping in all its parts. The operation shall be repeated as necessary to provide complete disinfection.
7. After the required retention period, the heavily chlorinated water shall be flushed to drain, unless otherwise directed.

3.6 PIPING SCHEDULE

Service	Size	Material	Interior Lining	Exterior Coating	Pressure Class	Joint	Test	Remarks
PW	4”-12”	D.I.	CL	BC	350	B.S.	HY	
PW	4”-12”	PVC	--	--	C900	B.S.	HY	
FM	4”-12”	D.I.	EC CL	BC	350	B.S.	HY	
FM	4”-12”	HDPE	--	--	As Required	B.W.	HY	
SS	8”-12”	D.I.	EC	BC	350	B.S.	AIR	
SS	8”-12”	PVC	--	--	ASTM 3034	B.S.	AIR	

A. Polyvinyl chloride (PVC) pressure pipe, 4 - 12 inches in diameter, shall be Class 235, DR 18, meeting the requirements of AWWA C900 and shall have cast-iron-pipe-equivalent outside diameters (also known as ductile iron pipe size (DIPS)). Each length of pipe shall be hydrostatically tested to four times its pressure class of the pipe by the manufacturer in accordance with AWWA C900..

B. Polyethylene tubing 2 inches in diameter and smaller for potable water and reclaimed water shall be high-density PE 3408 polyethylene resin per ASTM D2737, Pressure Class 200, Copper Tube Size (CTS), SDR 9, Performance Pipe DriscoPlex 5100, Endot EndoPure, Charter Plastics or an approved equal, meeting the requirements of AWWA C901. Butt fusion or CTS brass connections shall be used. All pipe materials used in potable water systems shall comply with NSF Standard 61.

C. Ductile iron pipe shall conform to AWWA C150 and AWWA C151. Pipe shall be Pressure Class 350. All pipe materials used in potable water systems shall comply with NSF Standard 61.

D. Polyvinyl chloride (PVC) gravity sewer pipe and fittings, 4-15 inches in diameter, shall be SDR 26, meeting the requirements of ASTM D 3034. Joining of pipe sections and fittings shall be by water-tight push-on joints using elastomeric gaskets in accordance with ASTM D 3212.

The following abbreviations are used in the piping schedule:

A.	Service Abbreviations			
	Potable Water	PW	Secondary Sludge	SS
	Force Main	FM		
B.	Material Abbreviations			
	Polyvinyl Chloride	PVC	Ductile Iron	DI
	High Density Polyethylene	HDPE		
C.	Lining/Coating Abbreviations			
	Cement Lined	CL		
	Bituminous Coated	BC		
	Epoxy Coated	EC		
D.	Joint Abbreviations			
	Belt and Spigot	BS	Flanged	Flg
	Mechanical Joint	MJ	Butt Welded	BW
E.	Test Abbreviations			
	Hydrostatic test (Pressure-psig)		HY (	
		) Exfiltration	EX	
	Low pressure air	AIR		
	No test required	NR		

3.7 METHOD OF MEASUREMENT

A. The length of pipe shall be measured in linear feet of pipe in place, completed, and accepted. It shall be measured along the centerline of the pipe from end or inside face of structure to the end or inside face of structure, whichever is applicable. The several classes, types and size of pipe shall be measured separately. All fittings and thrust resraints shall be included in the footage as typical pipe sections in the pipe being measured.

3.8 BASIS OF PAYMENT

A. These prices shall fully compensate the Contractor for furnishing all materials and for all preparation, excavation, and installation of these materials; and for all labor, equipment, tools, and incidentals necessary to complete the item.

B. Payment will be made at the contract unit price per linear foot for each kind of pipe of the type and size designated.

Payment will be made under:

Item 15051-1	8” PVC Gravity Sanitary Sewer Pipe – per linear foot
Item 15051-2	2” PVC Force Main – per linear foot
Item 15051-3	6” PVC Force Main – per linear foot

Item 15051-4	6” DIP Water Main – per linear foot
Item 15051-5	12” DIP Water Main – per linear foot
Item 15051-6	1” Polyethylene (HDPE) Tubing – per linear foot

END OF SECTION 15051

SECTION 15100

VALVES, 4-INCH AND LARGER

PART 1 - GENERAL

1.1 DESCRIPTION

A. Scope:
   1. CONTRACTOR shall provide all labor, materials, equipment and incidentals as shown, specified and required to furnish and install 4-inch and larger valves and appurtenances, complete and operational.

B. Related Sections:
   1. Section 09900, Painting.
   2. Section 15051, Buried Piping Installation.
   3. Section 15052, Exposed Piping Installation.

1.2 REFERENCES

A. Comply with the applicable provisions and recommendations of the following standards, except as otherwise shown or specified.

B. ANSI Standards:
   1. B16.1, Cast-Iron Pipe Flanges and Flanged Fittings.
   2. B16.34, Valves-Flanged, Threaded, and Welding End.

C. API Standards:
   1. 594, Wafer Check Valves.
   2. 598, Valve Inspection and Test.
   3. 609, Butterfly Valves, Lug-Type and Wafer-Type.

D. ASTM Standards:
   1. A126, Gray Iron Castings for Valves, Flanges and Pipe Fittings.
   2. A193, Alloy Steel and Stainless Steel Bolting Materials for High Temperature Service.
   3. A194, Specification for Carbon and Alloy Steel Nuts for Bolts for High Pressure and High Temperature Service.
   4. A307, Carbon Steel Externally Threaded Standard Fasteners.
   5. A380, Practice for Cleaning and Descaling Stainless Steel Parts, Equipment and Systems.
   6. A536, Ductile Iron Castings.
   7. A743, Castings, Iron-Chromium, Iron-Chromium-Nickel, Corrosion Resistant, for General Application.
   8. B21, Naval Brass, Rod, Bar, and Shapes.
   9. B61, Steam or Valve Bronze Castings.
   10. B62, Composition Bronze or Ounce Metal Castings.
   11. B98, Copper-Silicon Alloy Rod, Bar, and Shapes.
   12. B124, Copper and Copper Alloy Forging Rod, Bar and Shapes.

13. B138, Manganese Bronze Rod, Bar and Shapes.
14. D429, Test Methods for Rubber Property - Adhesion to Rigid Substrates.
15. B584, Copper Alloy Sand Castings for General Applications.

E. AWWA Standards:
1. C502, Dry-Barrel Fire Hydrants.
2. C504, Rubber-Seated Butterfly Valves.
3. C507, Ball Valves, 6 Inch Through 48 Inch.
4. C508, Swing-Check Valves for Waterworks Service, 2 Inch Through 24 Inch.
5. C509, Resilient-Seated Gate Valves for Water Supply Service.
6. C550, Protective Epoxy Interior Coatings for Valves and Hydrants.

1.3 QUALITY ASSURANCE

A. Qualifications:
1. Manufacturer:
a. Minimum of five years of experience producing substantially similar equipment and able to show evidence of at least five installations in satisfactory operation for at least five years in the continental United States.
b. Equipment shall be manufactured in the United States.

B. Component Supply and Compatibility:
1. Obtain all equipment included in this Section, regardless of the component manufacturer, from the valve manufacturer to ensure compatibility and proper operation.

1.4 SUBMITTALS

A. Shop Drawings:
1. Product data sheets.
2. Complete catalog information, including dimensions, weight, specifications, and identification of materials of construction of all parts.
3. C_v values and headloss curves.
4. Certificates of compliance with AWWA Standards where applicable.
5. Corrosion resistance information to confirm suitability of the valve materials for the application. Information on chemical resistance of elastomers shall be furnished from the elastomer manufacturers.

B. Certified copies of shop test results and inspection data.

C. Operation and Maintenance Data: Submit complete manuals including:
1. Copies of all approved Shop Drawings, test reports, maintenance data and schedules, description of operation, and spare parts information.

PART 2 - PRODUCTS

2.1 GENERAL PROVISIONS

A. Manually operated valves, with or without extension stems, shall require not more than a 40-pound pull on the manual operator to open or close a valve against the specified criteria. The gear actuator and the valve components shall be able to withstand a

minimum pull of 200 pounds on the manual operator and an input torque of 300 foot pounds to an actuator nut. Manual operators include handwheel, and a T-handle wrench.

B. Provide all valves to turn clockwise to close, unless otherwise specified.

C. Provide all valves with permanent markings for direction to open.

D. Provide exposed valves with flanged ends conforming to ANSI B16.1. The pressure class of the flanges shall be equal to or greater than the specified pressure rating of the valves.

E. Provide buried valves with mechanical or push-on joints, restrained or unrestrained, as required by the piping with which they are installed.

F. All materials of construction of the valves shall be suitable for the application as shown on the Drawings.

G. Protect wetted parts from galvanic corrosion due to contact of two different metals.

H. Provide all valves with manufacturer's name and rated pressure cast in raised letters on the valve body.

I. Provide valves with brass or Type 316 stainless steel nameplates attached with Type 316 stainless steel screws. Nameplates shall have engraved letters and shall include the following information as a minimum:

1. Valve size.
2. Pressure and temperature ratings.
3. Application (other than water and wastewater).
4. Date of manufacture.
5. Manufacturer's name.

J. Clean and descale fabricated stainless steel items in accordance with ASTM A380, and as follows:

1. Passivate all stainless steel welded fabricated items after manufacture by immersion in a pickling solution of 6 percent nitric acid and 3 percent hydrofluoric acid. Temperature and detention time shall be sufficient for removal of oxidation and ferrous contamination without etching the surface. Perform a complete neutralizing operation by immersion in a trisodium phosphate rinse followed by a clean water wash.
2. Scrub welds with the same pickling solution or pickling paste and clean with stainless steel wire brushes or by grinding with non-metallic abrasive tools to remove weld discoloration, and then neutralize and wash clean.

K. For stainless steel bolting, except where Nitronic-60 nuts are required, use anti- seize compound, graphite free, to prevent galling. Strength of the joint shall not be affected by the use of anti-seize compound.

2.2 APPURTENANCES FOR EXPOSED METALLIC VALVES

A. Handwheels:

1. Conform to the applicable AWWA Standards.
2. Material of Construction: Ductile iron or cast aluminum.
3. Arrow indicating direction of opening and word "OPEN" shall be cast on the trim of the handwheel.
4. Maximum Handwheel Diameter: 30 inches.

2.3 APPURTENANCES FOR BURIED METALLIC VALVES

A. Wrench Nuts:

1. Provide wrench nuts on all buried valves of nominal 2-inch size conforming to

AWWA C500.

2. Arrow indicating direction of opening the valve shall be cast on the nut along with the word "OPEN".
3. Material: Ductile iron.
4. The nut shall be secured to the stem by mechanical means.

B. Extension Stems for Non-Rising Stem Gate Valves and Quarter Turn Buried Valves:
1. Provide extension stems to bring the operating nut to 6 inches below the valve box cover.
2. Minimum Size and Material: Same as valve stem.
3. Maximum Unsupported Length: 3 feet.
4. Provide top nut and bottom coupling of ductile iron with pins and set screws of Type 316 stainless steel.

C. Valve Boxes:
1. Valve boxes shall be as indicated and as required.
2. Type: Heavy duty, suitable for highway loading, 2-piece telescopic, and adjustable. Lower section shall enclose operating nut and stuffing box and rest on bonnet.
3. Material: Cast or ductile iron.
4. Coating: Two coats of asphalt varnish conforming to Federal Specification TT-C-494.
5. Marking: As required for service.

2.4 ANCHOR AND MISCELLANEOUS MOUNTING BOLTS

A. All bolts, nuts and washers for connection of the valve appurtenances to concrete structure or other structural members shall be obtained from the valve manufacturer, and shall be of ample size and strength for the purpose intended. Anchor bolts shall be hooked or adhesive type.

B. Provide anchor bolts for stem guides of required strength to prevent twisting or sagging of the guides under load.

C. Provide bolts and washers of Type 316 stainless steel and nuts of Nitronic 60. The bolts shall have rolled threads and both bolts and nuts shall be electropolished to remove burrs.

D. Minimum Size of Anchor Bolts: 5/8 inch.

2.5 PAINTING OF EXPOSED VALVES, HYDRANTS AND APPURTENANCES

A. Exterior steel, cast-iron, and ductile iron surfaces except machined surfaces of all exposed valves and appurtenances shall be finish painted in the shop. The surface preparation, priming, finish painting, and field touch-up painting shall conform to Section 09900.

2.6 PAINTING OF BURIED VALVES

A. Exterior steel, cast-iron, and ductile iron surfaces except machined or bearing surfaces of all buried valves shall be shop-painted with two coats of asphalt varnish conforming to Federal Specification TT-C 494.

PART 3 - EXECUTION

3.1 INSTALLATION

A. Install all valves and appurtenances in accordance with the manufacturer's instructions.

B. Conform to appendices of AWWA Standards, where applicable.

C. Install all valves so that operating handwheels or levers can be conveniently turned from operating floor without interfering with access to other valves and equipment, and as approved by the ENGINEER. Orient chain operators out of the way of the walking areas. Mount valves so that indicator arrows are visible from floor level.

D. For motor-operated valves located lower than five feet above the operating floor, orient the motor actuator to permit easy access to the push buttons and the handwheel.

E. Install all valves plumb and level. Install all valves to be free from distortion and strain caused by misaligned piping, equipment or other causes.

F. For buried valve installations, set valve boxes plumb and centered, with soil carefully tamped to a lateral distance of 4 feet on all sides of the box, or to the undisturbed trench face if less than 4 feet. Provide a flexible coupling next to a buried valve for ease of valve removal.

G. Install plug valves in horizontal liquid lines with the stem horizontal and the plugs on top when the valves are open and the plugs on upstream end when the valves are closed. Install valves in vertical liquid lines with the plug at the top when closed.

3.2 FIELD TESTS AND ADJUSTMENTS

A. Adjust all parts and components as required to provide correct operation of the valves.Conduct a functional field test on each valve in the presence of the ENGINEER to demonstrate that each valve operates correctly.

B. Verify satisfactory operation and controls of motor operated valves.

C. Demonstrate satisfactory opening and closing of valves at the specified criteria requiring not more than 40 pounds effort on the manual actuators.

D. Test 10 percent valves of each type by applying 200 pounds effort on the manual operators. There shall be no damage to the gear actuator or the valve.

3.3 METHOD OF MEASUREMENT

A. Fire Hydrant Assemblies and Hose Bib Assemblies will be paid for at the contract unit price for each assembly installed, including gate valve, piping and thrust restraint. Gate valves shall be measured by the unit.

3.4 BASIS OF PAYMENT

A. The accepted quantities of fire hydrant assemblies and gate valves will be paid for at the contract unit price per each in place when completed. This price shall be full compensation for furnishing all materials and for all preparation, excavation, backfilling, and placing of the materials; furnishing and installation of such specials and connections to pipes and other structures as may be required to complete the item as shown on the plans; and for all labor equipment, tools and incidentals necessary to complete the item.

Payment will be made under:

Item 15100-1	Fire Hydrant Assembly – per each
Item 15100-2	Hose Bib Assembly – per each
Item 15100-3	6” Gate Valve – per each
Item 15100-4	12” Gate Valve – per each

END OF SECTION 15100

SECTION 33 32 17

SUBMERSIBLE UTILITY WASTEWATER PUMPING STATION

SECTION 1 - GENERAL

1.1 SUMMARY

A. Work under this section consists of furnishing and installing a fully operational and complete submersible pump station as detailed on the drawings and specified herein. It shall include all labor, materials, site grading, structures, excavation, sheeting, backfill, reinforced concrete, masonry, carpentry, yard piping, equipment piping, miscellaneous piping, equipment, electrical work, controls, incidental painting, and all other items or material and work required to construct structures and furnish and install equipment for a complete installation as hereinafter specified.

B. All materials to be installed shall be purchased in accordance with all applicable provisions of the Buy American Act.

1.2 DESIGN AND PERMITTING

A. Wastewater pump stations shall be designed and permitted (at a minimum) in accordance with applicable state permitting requirements.

B. Prior to construction of the facilities, the Contractor shall be responsible for coordinating all electrical work with local electric utility or Base Privatized Electrical provider.

1.3 SUBMITTALS

A. Product Data: Include rated capacities, operating characteristics, furnished specialties, and accessories.

B. Shop drawings shall be provided for all fabrication and installation details for each packaged sewage pumping station. Equipment assemblies shall be detailed to indicate dimensions; shipping, installed, and operating weights; loads; required clearances; method of field assembly; components; electrical characteristics; and location and size of each field connection.

C. Shop drawings and manufacturer's product data shall be submitted to the Utility for the following items at a minimum:

1. Pumps
2. Wetwell
3. Generator
4. Drives
5. Valves
6. Controls
7. Rainhood
8. Valve Vault

9. Wiring Diagrams: Power, signal, and control wiring.
10. SCADA P&ID and wiring diagrams
11. SCADA equipment including RTU and antenna
12. All control panels and enclosures
13. Jib crane
14. Access Hatches
15. Wetwell
16. Valve vault sump pump
17. Paint and coatings to be used on the project

D. Certificates of Compliance shall be submitted to the Utility for the following

1. Pumps
2. Drives
3. Controls

E. Operating & Maintenance and Service Manuals

1. The Contractor shall furnish two paper copies and one digital copy on a USB Flash Drive of an Operating & Maintenance and Service manual covering all of the equipment furnished for the wastewater pumping station.

2. The manual shall contain complete descriptions of each item of equipment and a complete parts list showing factory parts numbers. It shall also contain complete operating and service instructions and shall be tabbed and indexed for easy use. Manuals shall be submitted within 60 days after final review of shop drawings.

1.4 QUALITY ASSURANCE

A. Electrical equipment, materials and workmanship shall comply with all applicable codes, safety and fire law regulations at the location of the work and shall conform to applicable codes and standards of the organizations listed below:

1. Utility requirements.

2. National Electrical Motors and Generators

a. NEMA ICS2 Industrial Control Devices, Controllers and Accessories.

b. NEMA MG1 Motors and Generators Standards listed above refer to the latest revision.

3. Submersible Wastewater Pump Association – SWPA Submersible Sewage Pumping Systems Handbook.

4. Department of Defense Unified Facilities Code – Sanitary and Industrial Wastewater Collection: Pumping Stations and Force Mains. DOD_UFC 3-240-08FA

5. National Electrical Code (NEC)

B. All equipment and materials shall be new and shall bear the manufacturers name and trade name.

C. In cases where the standard has been established for the particular material, the material shall be so labeled.

D. The equipment to be furnished shall essentially be the standard product of a manufacturer regularly engaged in the production of the required type of equipment for this type of work and shall be the manufacturers latest approved design.

E. Equipment and material shall be suitably delivered and stored, and shall be readily accessible for inspection. All items subject to moisture damage shall be stored in dry spaces. All material and equipment shall be protected against dirt, dust, water and chemical or mechanical injury, vandalism and theft.

SECTION 2 – MATERIALS

2.1 GENERAL

A. The contractor shall furnish, take possession of when delivered, and install the following equipment where shown on the drawings, complete with all incidental and appurtenances required for a complete, finished and fully operational installation.

B. All equipment components shall be adequately sized to carry all loads and stresses occurring during fabrication and erection and resulting from normal and emergency operation in the installation shown on the drawings and under the conditions specified and/or implied.

2.2 SUBMERSIBLE PUMPS & MOTORS

A. Pumps, motors, and controls shall be as specified herein and as indicated on the drawings:

1. Type: Vertical submersible centrifugal non-clog, 2 required (Duplex System)

2. Capacity: Per Plan Data

3. Minimum sphere size: 3 inch

4. Efficiency at design point: Per Plan Data

5. NPSHr at design point: Per Plan Data

6. Motor performance requirements:

a. Motor horsepower: Per Plan Data

b. Motor speed: Per Plan Data

c. Nominal power supply: 240/480 VAC, 3 phase, 60 Hz

d. Maximum current: Per Plan Data

e. Minimum power factor at full load: Per Plan Data

f. Minimum efficiency at full load: Per Plan Data

g. Minimum service factor: 1.15

B. Submersible Pumps

1. Pumps shall be submersible, centrifugal non-clog capable of passing solids as specified with hydraulic sealing diaphragms, pump mounting plates and base elbows with bottom rail supports, stainless steel upper rail supports, stainless steel lifting cable and/or stainless steel chain, schedule 40 stainless steel guide rails, and stainless steel cable supports.

2. It is the intent of these specifications that the pumps, base plates, guide rails, hoisting cable and connections to the control system (including panel, starters and circuit breakers), be provided by the pump manufacturer as an integral system.

3. Pump housing shall be of heavy cast iron construction.

4. All fasteners shall be minimum 304 or 304L stainless steel or Utility approved equal.

5. Each pump shall be capable of being hoisted vertically out of the wetwell, and returned to operation without requiring the operator to enter the wetwell.

6. No electrical splices shall be allowed inside the wetwell.

7. The impeller shall be of bronze, ductile iron, or other durable, corrosion-resistant approved material. The pump impeller shall be of semi-open non-clog design and shall have back vane(s) to prevent build up of solids behind the impeller. The impeller shall be rigidly fixed to the motor shaft with a key(s) or other approved fastener (so designed to prevent separation under rotational loading).

8. The motor shaft shall be stainless steel, supported by upper and lower bearings. The upper bearing shall be a self-lubricating ball bearing. The lower bearing shall be a sleeve bearing or double row ball bearing lubricated from an oil chamber. Shaft and bearing shall have sufficient

section to withstand all rotational and axial loading to be reasonably expected under normal wastewater pumping situations.

9. The shaft shall be sealed from the volute with an oil-lubricated mechanical seal system. The oil chamber shall be equipped with a seal sensor system to detect any leakage around the seal system. Mechanical seal shall be tungsten carbide type, double mechanical seal. One replacement seal for each pump shall be furnished to the utility.

10. The motor chamber shall be suitably sealed from the other chambers of the pump and from the exterior so as to be entirely suitable for submerged operation. The motor chamber may either be of oil-filled or air-filled design.

11. Pumps shall be as manufactured by Meyers, Homa, Flygt or Utility approved equal.

C. Motors

1. Pump motors shall be of the sealed submersible type meeting UL Class I, Group D, Division I - Explosion proof requirements. The maximum rpm of the motor shall be as noted on the drawings or shall be approved by the Utility. Motors shall meet NEMA thermal rating MGI - 12.42. All leads are to be epoxy sealed.

2. Motors used on variable frequency drives (VFDs) shall be rated for inverter duty applications and shall be specifically approved by the Utility.

3. Moisture sensing probes and thermal protectors shall be furnished.

4. Motor frame and end shield shall be corrosion resistant cast iron.

5. Insulation shall be compatible Class B rated system with Class F material rated for continuous duty in 40-degree C liquids.

6. Motor shaft shall be type 416 stainless steel.

7. All hardware shall be stainless steel.

8. Submersible pump motors shall be furnished by the pump manufacturer.

9. Motors shall not be overloaded at any point within the operating range.

10. Motors shall be furnished with a minimum of 40 feet of submersible, waterproof, and multi-conductor power and control cable. If required cables shall terminate in a NEMA 4X stainless steel (or fiberglass if allowed by the Utility) junction box at the top of the wetwell which shall be connected to the control panel by RGS conduit. Cable size shall be sufficient to meet motor requirements.

11. The external pumping chamber seals and connections shall be sealed tightly together utilizing “O” rings or resilient gasket material. The power cable connection shall provide for a positive clamping action to seal the electrical connection and relieve strain on the cable strands.

2.3 PUMP CONTROLS

A. The pump manufacturer shall provide the pump control panel and accessory equipment. The contractor shall install the controls as shown on the drawings and manufacturer’s instructions. The control system shall include all motor starters, alternators, relays, level control switches, control panel, circuit breakers, alarm apparatus, and internal wiring.

B. Level control shall primarily be controlled by mercury displacement float switches. Submersible pressure transducers for level control may be required by the Utility for some lift stations, and shall be designated on the drawings if required by the Utility.

1. Mercury Displacement Float Level Control

a. Float switches shall be of the mercury tube type, encapsulated in polyurethane or vinyl floats. The units shall be waterproof, shock proof, explosion proof and equipped with sufficient submersible cable to extend to the control panel from the wet well without splicing. Any required weights shall be provided by manufacturer.

b. Switches shall be suspended in the wetwell on a suitable stainless steel rack or rail. Floats shall be installed so as not to interfere with the operation or maintenance of the pumps.

2. Submersible Pressure Transducer (if required)

a. A submersible level transducer shall be the primary mechanism for pump control and shall be provided to sense the liquid level of the wet well as shown on the plan drawings. The pressure transducer shall be installed per manufacturer’s written recommendations and instructions.

b. The manufacturer’s cable shall be ordered long enough to reach the control panel. This cable shall not be spliced.

c. The pressure transducer shall be non-freezing, operable up to 180º F.

d. The transducer housing shall be fabricated of PVC with a 2.5-inch diameter Teflon diaphragm. Silicone oil shall be used as a hydraulic fill.

e. The sensor shall be mounted using its signal cable and have a ¾-inch NPT pipe threading for pipe mounting.

f. The internal air pressure of the sensor shall be relieved to atmospheric pressure through a sealed breather system.

g. Pressure transducer shall be installed so as not to interfere with the operation or maintenance of the pumps.

h. Pressure transducer shall be anchored with minimum 10-pound mushroom type vinyl coated anchor with 316 stainless steel chain or Utility approved alternate anchoring method. Pressure transducer cable shall be anchored to stainless steel chain with plastic zip ties at 6-inch maximum intervals. Stainless steel chain shall be hung from stainless steel float bracket or other Utility approved alternate stainless steel bracket.

3. Junction Box

a. A Junction box shall be provided adjacent to the wetwell to provide for splicing float switch cables and/or pump power cables at the wetwell, to facilitate easier disconnect and removal of floats and/or pumps.

b. The junction box enclosure shall be NEMA 4X stainless steel and shall be suitable for post mounting.

C. Control Sequence

1. On rising liquid level in the wetwell, a switch shall start the lead pump. As the liquid level continues to rise, the second switch shall start the lag pump.

2. The pump(s) shall continue to operate until the liquid level recedes to the level of the third switch that shall stop the pumps.

3. The fourth switch shall energize the alarm circuit, should the liquid level rise above the lag pump start level.

4. The pumps shall automatically alternate between the “lead” and “lag” positions by means of an electric alternator in the panel.

5. The pump and control equipment shall be provided with electrical contacts, an alarm light and alarm horn which shall be mounted on the exterior of the station.

6. The alarm equipment shall be interlocked with wetwell controls to be actuated upon high wet well levels or loss of power. The alarm circuits shall be 120VAC circuitry. A silencer button shall be mounted to the exterior of control cabinet or panel for silencing the audible alarm.

D. Control Panel

1. Control panel for the pump station shall be shipped to the site, completely prewired, pre-assembled and ready for service.

2. The control panel shall be NEMA 3R or 4X (as noted on the drawings) with hinged door and lockable handle. Panel shall have a back mounting panel and a front inside hinged panel to make the control panel “dead-front” when outside door is open.

3. The control panel shall have an aluminum rain hood sized to shelter all panels including ATS, telemetry, control panel, etc., and shall be mounted on a concrete pad with a minimum thickness as shown on drawings.

4. For pump stations with 75 horsepower pumps or above, a prefabricated, ventilated, walk-in enclosure shall be provided. The enclosure shall be approved by the Utility prior to installation.

5. Electrical service to the pump station shall be provided by local Electric Provider or Base Privatized Electrical provider.

6. The control panel shall contain the following accessories housed in the enclosure:

    a. A switch for each pump labeled “Hand/Off/Auto.”

    b. If a VFD is furnished for pump speed control, a speed indicator and speed adjusting potentiometer for each pump shall be provided.

    c. High water alarm relay wired to alarm circuit.

    d. Motor moisture and thermal sensing relays wired to alarm circuit for each pump.

    e. Multi-colored (or equivalent markings) circuitry to facilitate trouble shooting.

    f. Elapsed time meter to indicate running time for each pump.

    g. All necessary internal wiring relays, etc., to provide operation as previously described.

    h. Phase monitoring capability which shall override and stop the normal operation of the pumps.

    i. Pilot Lights shall be full voltage PTT N4 oil-tight with a chrome base and Push-To-Test. The following lights shall be provided:

        1) Pump 1 Over temp

2) Pump 2 Over temp
3) Pump 1 Seal Failure
4) Pump 2 Seal Failure
5) Pump 1 Run
6) Pump 2 Run
7) Pump 1 Off
8) Pump 2 Off
9) High Level
10) Phase Failure
11) Power Failure

j. 120VAC weatherproof red strobe and horn with the silencer button shall be mounted on the control cabinet or panel for the alarm conditions. The alarm lights and horns shall be provided loose for external mounting.

k. A voltage free dry contact as a composite for all alarm conditions and a voltage free dry contact for each alarm status shall be provided as follows:

1) Pump 1 Run
2) Pump 2 Run
3) Pump 1 Off
4) Pump 2 Off
5) High Level
6) Phase Failure
7) Pump 1 Seal Failure
8) Pump 2 Seal Failure

l. Branch circuit breakers as required.

m. Circuit breaker for duplex, single phase (120 VAC) receptacle, 20 Amp optional, 1 pole.

n. Circuit breaker for each pump motor labeled “Pump 1” and “Pump 2.”

o. Circuit breaker for control circuit, 20 Amp, 1 pole.

p. Automatic electric alternator.

q. Time delay for the lag level circuit to delay restarting of the pumps after a power failure.

r. 240/480 volt relay to enable only one pump to run on emergency power.

s. All necessary internal relays etc. to provide intrinsically safe operation as previously described.

t. A remote terminal unit (RTU), consisting of an Instrulogic Corp. Model ILCE 3000 JC/LS. Interconnect all alarm functions in the pump control panel plus a “transferred” alarm from the automatic transfer switch shall be provided in a separate panel.

u. Contacts and wiring as required for a remote on/off station for each pump to override and stop the operation of each pump.

v. Magnetic starter for each motor with under-voltage release and quick-trip ambient-compensated overload protection for each leg. Starting shall be “across the line” except where motor horsepower is greater than 25HP, in which case, reduced voltage soft starters shall be required.

w. 120VAC, 20-amp auxiliary duplex weatherproof GFI power receptacle mounted on the bottom or lower side on the enclosure.

x. Manual Transfer Switches (MTS)

1) If there is no permanent back-up generator at the site, then main power disconnect (manual transfer switch) shall be provided between main power and pump station for “On,” “Off,” and “Emergency.”

2) MTS shall be used for transferring load between standby power receptacle and utility.

3) MTS shall be 3-pole, double throw with center “Off” position and shall isolate the load between the utility and portable generator sources.

4) MTS shall have a solid (non-switched) isolated neutral bus.

5) Switches shall be heavy duty, rated and shall include suitable lugs for termination of conductors indicated on the drawings.

6) Enclosure shall be NEMA 4X stainless steel and shall be suitable for post mounting.

y. Standby Power Receptacles

1) One standby power receptacle shall be provided and installed by the Contractor adjacent to the MTS enclosure on the electrical riser.

2) The receptacle shall be suitable for outdoor use and shall be heavy duty, circuit-breaking type.

3) The receptacle shall be mounted in a NEMA 3R or 4X stainless steel enclosure.

4) Receptacle shall be provided with suitable backbox, mounting hardware, and threaded cap.

5) Receptacle shall have reverse contacts, ratings, and UL listing to match the plug on the Utility's generator.

6) The Contractor shall coordinate with Utility before purchasing receptacle.

z. If shown on the electrical panel drawings, an anti-condensation heater shall be supplied inside of the enclosure. The heater shall be located in a manner that it shall not cause damage to other components or the panel wiring. The heater shall be sized to minimize the effects of humidity and condensation. The heater shall include a thermostat for temperature control.

E. Safety Disconnect Switch

1. A safety disconnect switch shall be provided between the Electric Utility Power feed and the Pump Control Panel.

2. The safety disconnect switch enclosure shall be NEMA 4X stainless steel and shall be suitable for post mounting.

3. The safety disconnect switch shall be mounted on the electrical riser adjacent to the Pump Control Panel, and shall be labeled with weatherproof plate as "SAFETY POWER DISCONNECT" with minimum 1-inch letters.

F. Telemetry

1. Contractor shall furnish through a Control System Integrator, all required work to provide a working wireless telemetry system to remotely monitor and control the pump station from the Utility's existing SCADA system to include but not be limited to such items as antenna, yagi antenna mounting, antenna cable, radio, SCADA HMI programming, RTU, RTU/PLC programming, circuit breakers, TVSS, PLC, relays, battery backup, etc. The Contractor is responsible for coordination of SCADA programming and start-up.

2. The radio telemetry system for each pump station back to the Utility's SCADA system shall be surveyed and have a fade margin greater than 20 dB.

3. The RTU supplied shall have the capability of communication with an existing remote master station. It shall accomplish the communication via an included spread spectrum radio operating within the 900 MHz

frequencies. It shall be capable of stand-alone control as well as operating as a slave to the master station.

4. Programming of the RTU shall be compliant with at least five of the IEEE 831 standard protocols.

5. The RTU shall be compatible, interfaced and programmed to Utility's existing system.

6. The RTU shall have a minimum input/output (I/O) capability of nine 110 VAC inputs, two 4-20 MA inputs, and four 110 VAC digital outputs. Each analog 4-20 madc I/O shall be individually and optically isolated. I/O with no isolation or group isolation shall not be acceptable.

7. The RTU shall be able to mix analog and digital channels on the same bus and be capable of handling up to sixty-four I/O.

8. The I/O system shall be capable of accepting a wide range of industry standard I/O including thermocouples, RTD's, relay, TTY, SSI, Pulse Width. All Analog I/O shall have individually replaceable multistage surge protection by Phoenix Contact, Citel, or Utility approved equal.

9. The RTU shall have a NEMA 3R or 4X enclosure (304 stainless steel, or fiberglass) with continuous hinge and padlockable door equal to a Hoffman enclosure. The RTU enclosure shall include the following as a minimum:

    a. 15A (20A optional) main circuit breaker

    b. Minimum size of 24-inch wide by 30-inch high by 8-inch depth

    c. Corrosion inhibitors installed after final testing

    d. Minimum 750 VA uninterruptible power supply

10. The RTU shall be Instrulogic Corporation ILCE 3000 JC/LS or Utility approved equal and shall be comply with UL508.

11. Backup power shall be by UPS battery in the event of main power failure.

12. Antenna

    a. The Contractor shall provide and install pole per the plan requirements with antenna vertically mounted 1-foot from top of 20-foot section of 2-inch Schedule 40 RGS pipe which shall be bolted through the pipe and pole using heavy duty galvanized hardware. The pipe shall extend 14-feet above top of pole and shall be aimed per Utility requirements.

b. Coax cable from the antenna to the ground level with connectors shall be installed when the pole is set. Coax shall be ½-inch TIMES LM600 or Utility approved equal.

c. Connectors shall be flooded with silicone grease and watertight taped using Scotch 33 before attaching to the pole using ½-inch, one-hole conduit straps and a screw.

d. A continuous #4 bare copper ground wire shall be stapled to the pole, top to bottom, and connected to one of the heavy duty galvanized bolts attaching the galvanized pipe to the wood pole and stapled in a coiled or spiral pattern on the butt of the pole.

e. A 150-watt metal halide luminaire (area light) shall be provided on a 24-inch arm mounted on the SCADA pole 15-feet above grade. A photo cell for the area light shall be mounted on the pole approximately 6-feet above grade.

13. The Contractor shall provide inputs and outputs to interface with the Pump Control Panel and ATS. Refer to Pump Control Panel Specifications and contract drawings for additional requirements.

2.4 WETWELL AND APPURTENANCES

A. Pump station wetwell shall be precast concrete with monolithic base or fiberglass as detailed on the drawings. Minimum dimensions shall be as indicated on the drawings.

1. Precast Concrete Wetwell

a. The precast wetwell shall meet ASTM C913 and ASTM C478 specifications. The inside of wetwell shall be factory or “field” epoxy coated to a minimum 30 mil surface dry thickness.

b. Wetwell base shall be provided if required to prevent flotation. A minimum 12-inch thick foundation shall be provided for the wetwell base. Concrete shall be reinforced to withstand the internal and external loads indicated plus a 100-psf live load on the top slab.

c. Joints shall be sealed with butyl rubber mastic (Ramneck), or “O-ring” gaskets installed in accordance with the manufacturer’s instructions. All joints shall be parged on the interior and exterior with type “C” mortar.

d. Interior of wetwell and piping inside wetwell shall be factory or “field” epoxy coated to a minimum 30 mil surface dry thickness. Epoxy sealer prime coating and finish coating shall be NSP 100 and NSP 120, respectively, Carboline, or Utility approved equal. If the wetwell is factory epoxy coated, touch-up “field” coating shall be required.

e. The station cylinder shall be affixed to the station bottom such that

e. The wetwell shall have, mounted at 18-inch above wetwell top, a junction box (if shown on the drawings) to enable quick disconnect of power leads to pump motors when pulling pumps out for maintenance.

f. The wetwell shall be equipped with 4-inch vent pipe with insect screen. Vent pipe shall be schedule 80 PVC, schedule 10 stainless steel, or ductile iron with interior coated with Protecto 401 manufactured by Induron Protective Coatings.

g. A sloped invert of non-shrink grout shall be constructed at the base of the wetwell. The invert shall have sufficient slope to prevent build-up of solids in the wetwell bottom.

B. Acc ss Hatches

1. The wetwell shall be equipped with an aluminum access hatch as shown on the drawings that shall be of adequate dimensions to pull out pumps with no obstruction.

2. Aluminum access hatches shall be exterior sidewalk, single or double leaf type as required or shown and shall be designed to support the weight of the pump unit plus 300 psf live load.

3. Doors shall be equipped with type 304 or 316 stainless steel slam lock having a key-way protected by a threaded plug, automatic hold-open arm with release handle held open in the 90-degree position, a safety chain, and a compression spring operator.

4. Cover door hinges shall be heavy-duty design and be cast Type 304 or 316 stainless steel a minimum of 1/4-inch thick with 3/8-inch diameter stainless steel hinge pins.

5. The hatch shall be equipped with an aluminum lift handle that shall be flush to the top of the diamond plate cover.

6. The access cover unit shall be equipped with a hinged safety grate to provide protection against fall-through and to control access into the confined space. Grate openings shall be sized to allow for routine maintenance inspection without having to open the safety grate. The closed safety grate shall be designed to support the weight of one pump to facilitate site pump wash-down and inspection.

7. The hatch opening shall have a 4-inch elevated toe board to prevent tools from being kicked into the wet well (per OSHA 1926.502 (j)).

8. The frame shall be provided with drainage channel.

9. Hatches shall be Type "J" or "JD" as manufactured by the Bilco Company, Darp Associates, Halliday, or Utility approved equal. For 6' to 8' diameter structures, Halliday type RIR hatches are preferred.

C. All bolts, brackets, hardware, etc. for fastening items or bolting piping located in the wetwell shall be a minimum of 304 or 304L stainless steel.

2.5 VALVE VAULT

A. Valve vault shall be precast concrete, polymer concrete or fiberglass with monolithic top and bottom as indicated on the drawings.

B. Valve vault construction and access shall meet the same requirements as the wetwell construction and access.

C. If a sump pump is shown on the drawings, the valve vault shall have a sump pit and a duplex receptacle installed in the vault within 6-inch of the top of the structure to provide power to the sump pump.

D. Check valve shall be of the horizontal swing type with an outside weighted swing arm.

E. A ¼-inch NPT tap for pressure gages shall be supplied on both sides of the check valve for each pump. One (1) pressure gage shall be installed on the discharge side of the check valve for each pump.

F. Plug valves shall meet the requirements of Section 33 30 00 Sanitary Sewer Piping, Structures & Appurtenances.

2.6 VALVE VAULT SUMP PUMP (if shown on the drawings)

A. One (1) automatic submersible sump pump, with a rated capacity of ten (10) gpm at ten (10) feet TDH shall be installed in the equipment capsule sump.

B. The sump pump shall be complete with a fractional horsepower motor, oil filled and hermetically sealed, designed to operate at 1,800 rpm, on a 120 volt, single phase, AC power source and draw no more than 4.2 amps.

C. A Buna-N shaft seal shall prohibit the pumped fluid from entering the motor housing.

D. The pump body shall be constructed of aluminum and polypropylene and the motor casing shall be cast aluminum.

E. The impeller shall be of polypropylene plastic and affixed to a 316 or 316L-grade stainless steel shaft.

F. The sump pump shall be “clog-proof” energy efficient design with built in thermal protection.

G. The sump pump shall have a built-in check valve on the discharge.

H. The sump pump shall operate within an approximately 3½-inch range turning on at approximately 5-inches and off at approximately 2½-inches of depth in the sump. The sump pump shall initiate a pumping cycle before the sump is filled. The pump float shall operate by sliding up and down a fixed bar.

I. The sump pump discharge piping shall be size 1½-inch schedule 80 PVC with solvent weld connections. The discharge piping system shall be complete with a union connection located on the upper and lower halves of the discharge line.

J. A PVC ball valve shall be installed on the discharge side of the check valve to enable maintenance of check valve without draining entire sump discharge line.

K. Sump pump shall discharge into wetwell as shown in the drawings.

2.7 PUMP STATION SITE

A. The pump station access road and site access shall be minimum 12-feet wide, and shall consist of material as shown in the plan details. The access road shall have a maximum slope of 10%. A vehicular turn around shall be provided outside of the fence.

B. Pump station site shall be enclosed by chain link fence as shown on the drawings if required. The dimensions of the fenced in area are shown on the drawings.

C. All areas inside the site fencing shall be treated with herbicide, landscaping fabric, and stone as shown on the drawings.

D. Wetwell shall be accessible on at least one side by service truck with crane mounted on rear passenger side.

E. Positive drainage away from all structures including wetwell shall be provided.

F. Control panel shall be within sight distance of wetwell and control panel access shall be facing wetwell.

G. Electrical conduits shall be installed from the control panel for all electrical and communications lines.

H. A bypass pumping connection shall be installed per drawings if required, see plan for details.

SECTION 3 - EXECUTION

3.1 GENERAL

A. The contractor shall install all pumps, motors, variable speed drives, and controls specified herein in accordance with the drawings and as recommended by the manufacturer.

B. Pump manufacturer shall provide pumps, motors, variable speed drives, controls and all other necessary items to make a complete installation. The contractor shall take possession of all pumps and equipment when delivered.

C. The Contractor shall provide labor, testing water and shall assist the Utility in performing field testing to check operating conditions of all pumps. The testing procedures shall be performed by the Contractor.

D. A representative of Utility shall inspect the subgrade before the setting of the wetwell.

3.1 INSTALLATION

A. Excavation, trenching, and backfilling shall conform to Section 31 20 00 – Excavation, Trenching and Backfilling.

B. The Contractor shall install sewage pumping station components where indicated, according to specific equipment and piping arrangement indicated.

C. The Contractor shall grout under and around wetwell, and shall ensure that there are no voids between foundation slab and under slab of pumping station.

D. The Contractor shall fill voids between wetwell sidewalls, sleeves, and piping and shall make a watertight seal with grout.

E. Sanitary sewer piping installation requirements shall conform to Section 33 30 00 Sanitary Sewer Piping, Structures & Appurtenances. Drawings indicate the general arrangement of piping.

F. The Contractor shall connect wiring according to manufacturer's written recommendation and instructions.

G. The Contractor shall install identifying labels permanently attached to equipment.

H. The Contractor shall install operating instruction signs permanently attached to equipment or on pumping station wall near equipment.

I. The Contractor shall prepare and paint ferrous piping in wet wells, structural-steel supports, and anchor devices with coal-tar epoxy-polyamide paint according to SSPC-Paint 16.

J. The Contractor shall paint field-welded areas to match factory coating.

3.2 FIELD QUALITY CONTROL

A. The Contractor shall perform tests and inspections and prepare test reports.

B. The Contractor shall engage a factory-authorized service representative to inspect components, assemblies, and equipment installations, including connections, and to assist in testing.

C. Tests and Inspections:

1. After installing sewage pumping stations and after electrical circuitry has been energized, the Contractor shall test the pumping station operation for compliance with requirements. All water required for pump tests shall be furnished by the Contractor.

2. Leak Test: After installation, the Contractor shall charge systems and test for leaks. The Contractor shall repair leaks and retest until no leaks exist.

3. Operational Test: After electrical circuitry has been energized, the Contractor shall start the units to confirm proper motor rotation and unit operation.

4. The Contractor shall test and adjust controls and safeties. The Contractor shall replace any damaged and malfunctioning controls and equipment.

D. The Contractor shall remove and replace components that do not pass tests and inspections and retest as specified above.

3.3 STARTUP SERVICE

A. The Contractor shall engage a factory-authorized service representative to perform startup service.

B. The manufacturer's field engineer or representative shall inspect and check the installation after erection and prior to start-up and shall certify that the completed installation is ready for start-up.

C. The manufacturer's field engineer or representative shall adjust pumps, accessories, control settings, and safety and alarm devices.

D. The manufacturer's field representative shall check the proper rotation, operating speed, and starting and running electrical characteristics of the operational pumping equipment and certify that they are correct.

E. The field manufacturer's representative shall also be available to Utility's operating staff in addressing operational and trouble-shooting concerns of the Utility staff.

3.2 PAINTING AND TOUCH-UP

A. All metal components with the exception of the stainless steel guide rails shall be painted in accordance with Utility requirements.

B. After all equipment and appurtenances have been installed, the Contractor shall touch-up any abrasions, scratches, or patches in the surface protection of any furnished item of work. Any mud, grease, or other extraneous material shall be removed from the completed work using suitable solvents or detergent solutions.

C. Galvanized conduit pipe threads shall be touched-up.

D. The wetwell interior and piping shall be touched-up with epoxy sealer prime coating and finish coating NSP 100 and NSP 120, respectively, Carboline, or Utility approved equal.

3.3 REPAIRS TO WETWELL

A. All openings made in the wetwell for anchorages, conduit runs, pipe runs, etc., shall be sealed using a cement grout. The grout shall be neatly applied to the vacancy and shall be troweled in, and excess grout shall be immediately removed from the wetwell. Grout shall be high strength, non-shrink grout**.**

3.4 INSPECTION AND ACCEPTANCE

A. All work shall be subject to inspection and approval by Utility prior to final acceptance.

B. Final acceptance of the pipe shall be contingent upon all pressure and leakage tests yielding satisfactory results, submittal of accurate as-built drawings, and the Utility's review of the results of testing.

C. Final acceptance of the project shall not be made until the Contractor has completed the total project, restoration, startup, and cleanup have been

performed to the satisfaction of the Utility and all closeout documents have been submitted. Restoration and cleanup includes the acceptance and release of the NPDES Permit by State Agency responsible for NPDES permits.

END OF SECTION 33 32 17

ELECTRICAL (LIGHTING) SPECIFICATIONS

BID DOCUMENTS

CONSTRUCT WEST APRON EXPANSION
AND INFRASTRUCTURE AT VPS

Item L-100 General Provisions and Requirements for Electrical Work

DESCRIPTION

100-1.1 SPECIAL REQUIREMENTS FOR ELECTRICAL WORK. These special requirements shall apply for the electrical work. Where the contract special conditions or general provisions also apply, the stricter of the documents shall apply.

100-1.2 AUXILIARIES AND ACCESSORIES. Include all auxiliaries and accessories for a complete and properly operating system, to the satisfaction of the Owner and Engineer.

Provide and install all electrical systems and any necessary appurtenances as per FAA Advisory Circulars, NEC and local codes whether specified or shown on drawings or not. The content of these specifications and contract documents in general only refers to work required above and beyond the requirements of the NEC and applicable local codes.

100-1.3 PROJECT PAY ITEMS. The project pay items are provided to be inclusive of all work to be performed as shown in the contract documents. All work not identified with a specific pay item is to be considered work to complete the project and is to be subsidiary to the cost of project pay items provided.

SUMMARY OF WORK

100-2.1 SUPERVISION AND ATTENDANCE. The Contractor shall provide a resident field superintendent who has had a minimum of four years previous successful experience on projects of comparable sizes and complexity. The Superintendent shall be present at all times that work under this division is being installed or affected.

100-2.2 RECORD DOCUMENTS. The Contractor shall maintain the contract documents, shop drawings and samples at the site, in good order and annotated daily to show all changes made during the construction process, per Section L-106, Submittals, Record Documents and Maintenance Manuals. These shall be available to the Engineer for examination.

100-2.3 SAFETY AND PROTECTION. The Contractor shall be solely and completely responsible for initiating, maintaining and supervising all safety precautions and programs in connection with the work. The Contractor shall take all necessary precautions for the safety of, and shall provide the necessary protection to prevent damage, injury or loss to:

a. All employees on the work and other persons (including but not limited to the general public) who may be affected thereby,

b. All the work and all materials or equipment to be incorporated therein, whether in storage on or off the site, and

c. Other property at the site, adjacent thereto, or utilized by the Contractor including but not limited to trees, shrubs, lawns, walks, pavements, structures, underground facilities, and

other utilities not designated for removal, relocation or replacement in the course of construction regardless of whether or not such other property is indicated in the Contract Documents.

d. Existing underground utilities and systems both shown on the plans and those not shown. The Contractor shall have all utilities and systems field located by the FAA or appropriate authorities having jurisdiction and shall take whatever measures necessary to protect the utilities and systems from damage.

The Contractor shall comply with all applicable laws, ordinances, rules, regulations and orders of any public body having jurisdiction for the safety of persons or property or to protect them from damage, injury or loss.

All hoisting machinery shall be inspected by a competent person or by a government or private agency recognized by the U.S. Department of Labor. A copy of the written inspection report shall be submitted to the Engineer prior to the start of work requiring the use of this equipment.

The installation and/or removal of lighting equipment may be critical to airport operations; therefore, the Contractor shall follow work schedules established in the plans and specifications or as directed by the Engineer. The system shall be installed in accordance with the National Electrical Code and/or local code requirements.

The Contractor shall provide temporary wiring as required to reconnect existing circuits to provide guidance for aircraft to pass through the construction areas on those taxiways/runways which must remain open. The Contractor shall check all temporary circuits before dark each day to assure that they are operational. In the event of failure, the Contractor shall immediately take steps to restore operation.

Powder-actuated fasteners will not be allowed without express written approval of the Engineer. No fasteners shall pierce the structure until approved by the Engineer.

Clean up of scrap materials and waste of the Contractor to be completed daily or more frequently as needed.

100-2.4 ENGINEERING INSPECTIONS. Items noted by the Engineer, Owner, or their authorized representative during construction and before final acceptance which do not comply with the contract documents will be listed in accordance with the specifications. These items will be sent to the Contractor for action. The Contractor shall have these items corrected.

Items noted after acceptance during the warranty period shall be checked and corrected by the Contractor in a timely manner acceptable to the Owner.

100-2.5 EXISTING CONDITIONS. Investigate the construction site thoroughly and reroute all conduit and wiring in area of new construction in order to maintain continuity of existing circuitry. Existing conduit shown on plans show approximate locations only. The Contractor must verify and coordinate existing site utilities, conduits and piping. The specifications include hand digging within five (5) feet of all existing utilities and all required rerouting in areas

of existing utilities, conduits and/or pipes.

The Contractor shall check the construction site and existing conditions thoroughly before bidding. The Contractor shall advise the Engineer of discrepancies or questions noted.

Special attention is called to the fact that work involved in this project is in connection with existing systems/facilities which must remain in operation while work is being performed. Work must be done in accordance with the schedule specified in the contract documents. Schedule work for a minimum outage to the Owner. Request written permission and receive written approval from the Owner a minimum of 72 hours in advance of any shut-down of existing systems. Perform work required at other than standard working hours where outages cannot be approved during regular working hours. Protect existing buildings and equipment during construction as required.

If any difference is discovered between the existing conditions and the drawings or specifications, the Engineer shall be notified in writing immediately.

100-2.6 SYSTEMS GUARANTEE. The work required under this specification shall include a one (1) year warranty unless required otherwise by these specifications. This warranty shall be by the Contractor to the Owner for any defective workmanship or material which has been furnished under this contract for a period of one year (1) from the date of final acceptance of the system. This warranty shall not include light bulbs in service after one (1) month from date of final acceptance of the system. Explain the provisions of the warranty to the Owner at the "Demonstration of Completed System."

100-2.7 SUBSTANTIAL COMPLETION. All specified work shall be complete prior to final inspection of the work, and all forms and other information requested, including maintenance manuals, shall be submitted to the Engineer for approval one (1) week before the request for substantial completion of the work.

100-2.8 FINAL ACCEPTANCE. All work specified shall be complete after the substantial completion observation, all repairs made, and all required information approved at which time the Owner shall formally accept the project and take possession of all work on a permanent basis.

100-2.9 CONTRACTORS RESPONSIBILITIES. Provide necessary layout, labor, material, equipment, tools, transportation, full time supervision and services required for the satisfactory and timely completion of the work in accordance with the drawings and specifications and contract documents.

Unload, store, protect and re-handle the materials required for this contract until such time that material is in place. Provide protection of materials required of this contract after installation.

Provide all required transportation, erection, maintenance, dismantling and removal of temporary facilities and equipment required by this contract.

Provide all transportation, unloading, distribution, hoisting, rigging, material handling and scaffolding required to install the work of this contract.

Provide all engineering and layout required to perform the work.

Provide temporary electrical power and temporary water and sanitary sewer for the Contractor's field office, Engineer's field office and on-site testing laboratory. Pay all utility company charges. Provide temporary power required for the Contractor's work.

Prior to start of his work the Contractor is to inspect work performed by others on which this work is to be placed on or adjacent to, and report in writing to the Engineer, any condition found to be unacceptable. Failure to make said report shall constitute acceptance of the conditions found and any claims made thereafter due to the unacceptable conditions will not be considered by the Engineer.

Provide all required coordination and supervision where work connects to or is affected by work of others, and comply with all requirements affecting this work. Work required under other sections, specifications or drawings to be performed by this section shall be coordinated with the respective contractor, and such work performed at no additional cost to the Owner including but not limited to electrical work in support of the mechanical division of the specifications and drawings.

It is the responsibility of the Contractor to coordinate the exact required location of any electrical or electronic equipment, system, or cabinets to be installed in or relocated inside an existing electrical or electronic equipment space. No existing equipment may be relocated in any existing electrical or electronic equipment room without prior coordination and with written approval of the Owner.

Provide and pay for all permits, licenses, fees and inspections required for the performance of the work. The Contractor shall pay all sales, consumer, use and other taxes required to be paid in accordance with the laws of the place of the project.

Provide all tests as required, per the drawings and specifications and submit all test reports to the Engineer.

Provide all excavation, backfill, compaction, shoring and dewatering required for performance of the work.

Provide sleeves for all conduit required as specified.

Protect all work of this contract from damage and intrusion of dirt and foreign objects. Close off open ends of conduit and sleeves on work which is to be completed at a later date. Remove closure material prior to continuance of work.

Prior to Final Inspection, submit to the Engineer, all Record Drawings and Operation and Maintenance Manuals as specified. Instruct Owner's maintenance personnel in the operation

and maintenance of the systems as required by the Specifications.

The above is not all inclusive of the work described by the drawings and Specifications, which form the basis for this contract, but is presented for the Contractor's convenience.

100-2.10 INTERPRETATION OF DRAWINGS AND SPECIFICATIONS. Should anything necessary for the clear understanding of the electrical work be omitted from the contract documents, or should the requirements appear to be in conflict, the Contractor shall secure written instructions from the Engineer before proceeding with the work affected thereby; otherwise the Contractor will be deemed to be proceeding at his own risk and expense. It is understood and agreed that the work shall be performed according to the true intent of the contract documents. Refer to Appendix A Figure 1 for a "Request For Information" (RFI) form.

BASIC MATERIAL & METHODS

100-3.1 REQUIREMENTS OF BASIC MATERIALS AND METHODS. The work shall include the furnishing of the systems, equipment and material specified in these specifications and as called for on the drawings, to include: supervision, operations, methods and labor for the fabrication, installation, start-up and tests for the complete electrical installation. Provide the necessary intertrade/Contractor coordination for the installation to be in a neat and workman like manner.

Drawings for the work are diagrammatic, intended to convey the scope of the work and to indicate the general arrangement and locations of the work. The drawings shall not be scaled for exact sizes or locations. Because of the scale of the drawings, certain basic items such as: conduit fittings, access panels, sleeves, pull and junction boxes may not be shown. Where such items are required by Code or by other sections or where they are required for proper installation of the work, such items shall be included. Coordinate final equipment locations with governing architectural and structural drawings. Layout equipment before installation so that all trades may install equipment in the space available.

Equipment Specifications may not deal with minute items such as components, parts, controls and devices which may be required to produce the equipment performance specified or as required to meet the equipment warranties. Where such items are required, they shall be included by the Contractor or the supplier of the equipment, whether or not specifically called for.

Conduit routed through any buildings that interferes with other equipment and construction shall not constitute a reason for an extra charge. Equipment, conduit, and fixtures shall fit into available spaces in the building; do not introduce these into the building at such times or in such manner as to cause damage to the structure. Equipment that requires servicing shall be readily accessible.

Locate all openings required for work performed under this section. Provide sleeves, guards or other approved methods to allow passage of items installed under this section.

Keep cutting and patching to a minimum. Insofar as possible, determine in advance the proper chase size and openings necessary for the work.

Where cutting and patching are required due to an error of the Contractor, or where the Contractor has not given enough advance notice of the need for holes, recesses, and chases, patching shall be performed by those trades skilled in the use of the materials involved and shall be done at the Contractor's expense.

Any cutting of work in place shall be patched and decorated by such mechanics and in such a manner that the quality of workmanship and finish shall be compatible with that of adjacent construction.

The approximate location of building fixtures, wall switches, etc., is indicated on the drawings. Exact locations shall be determined by the Engineer as building work progresses. The indicated locations may be changed by ten (10) feet in any direction without additional cost before the items are installed.

The drawings and specifications describe specific sizes of switches, breakers, fuses, conduits, conductors, and other items of wiring equipment. These sizes are based on specific items of power consuming equipment (heaters), lights, motors for fans, compressors, pumps, etc.) Wherever the Contractor provides power consuming equipment which differs from drawings and specifications, the wiring and associated circuit components for such equipment shall be changed to proper sizes to match at no additional expense to the Owner.

Surface mounted fixtures, outlets, cabinets, conduit, panels, etc., shall have finish or shall be painted as directed by the Engineer. Paint shall be in accordance with other applicable sections of these specifications.

All materials utilized shall be suitable for the environment encountered. No combination of materials shall be used that forms an electrolytic coupling of such nature that in the presence of moisture corrosion is accelerated.

In general, all relays, contactors, panelboards, disconnect switches, circuit breakers, are to be supplied and manufactured by the same manufacturer and shall be submitted and approved as equal to that specified.

Make electrical connections to constant current regulators, and at other locations as required with approximately 3 feet (12" minimum) of Sealtight flexible conduit. The sealtight electrical conduit shall utilize strain relief type connectors by adding a T&B wire mesh grip, WMG-LT series, or approval equal to each sealtight connector. Determine the requirements from drawings, these specifications, and the approved manufacturer drawings.

Provide inserts, hangers, supports, braces, and anchor bolts as necessary for all work called for under these specifications.

All conduits shall contain one copper grounding conductor, in accordance with NFPA 70, NEC

Article 250. #6 AWG and smaller shall have green insulation. #4 AWG and larger shall have black insulation with green phasing tape. The only exception is the 5KV airfield lighting conduits and ductbanks.

All galvanized materials shall be hot-dip galvanized after fabrication, conforming to ASTM A 123 and/or A 153, unless noted otherwise.

Unless noted otherwise, all panelboards, junction boxes, wireways, etc., shall be spaced off the concrete structure by using a Unistrut P-1060 series square washer or approved equal between the mounting surface and the equipment at each mounting point. Equipment as listed above, mounted on Unistrut or approved equal shall have Unistrut P-1060 series square washer or approved equal installed between the Unistrut channel or approved equal and the equipment at each mounting point. All bolted connections and equipment mountings shall utilize a flat washer, lock washer and hex head A-325 bolting hardware.

Unless noted otherwise, all wire sizes are based on a 135 degrees F (75 degrees C), THWN-2 600 volt insulation, copper conductors, not more than three single insulated conductors, in raceway, in free air. The conduit sizes are based on the use of THWN-2 600 volt insulated conductors. The Contractor shall make the necessary increase in conduit sizes for other types of wire insulation. In no case shall the conduit size be reduced. The minimum wire size shall be #12 AWG.

All electrical conductors, windings, busbars, etc. shall be high conductivity (98% conductivity) copper.

The Contractor shall furnish and install all required motor overcurrent protection required by the NEC and these drawings and specifications. The overcurrent protection shall be sized according to the motor nameplate data.

100-3.2 ELECTRICAL REFERENCE SYMBOLS. Symbols used on the plans are defined in the Electrical Legend on the Drawings. Not necessarily will all symbols scheduled be applicable to the project.

100-3.3 ACTIVE SERVICES. Existing active services i.e., water, gas, sewer, electric, communications, etc. when encountered, shall be protected against damage. Do not prevent or disturb operation of active services which are to remain. If active services are encountered which require relocation, the Contractor shall make a written request to the Owner for determination of procedures. Where existing services are to be abandoned, they shall be terminated in conformance with requirements of the Utility or Municipality or Authority having jurisdiction.

100-3.4 CODES AND FEES. Install in accordance with latest edition of FAA Advisory Circulars, the National Electrical Code and the regulations of governing Federal, State, County, local and other applicable codes, including the Utilities Company. Where a conflict in code requirements occurs the most stringent requirement shall govern. The Contractor shall be responsible and pay all required licenses, fees and inspections including meter installation fee. The cost for such shall be included in the bid price.

The work shall meet the requirements and recommendations of applicable portions of the latest editions of these standards:

a. National Electrical Code (NFPA 70)

b. Life Safety Code (NFPA 101)

c. National Electrical Safety Code (ANSI C2)

d. NEMA Standards (NEMA)

e. Underwriter's Laboratories (UL)

f. Institute of Electrical and Electronics Engineers (IEEE)

g. Lightning Protection Code (NFPA) 780 and UL 96A)

h. AWS D1.1

i. ANSI

j. NFPA

k. Federal Aviation Administration Advisory Circulars (AC)

l. Applicable Local Building Code

m. Certified Ballast Manufacturers (CBM)

The above is not all inclusive of applicable codes and standards, but is presented for the Contractors convenience.

100-3.5 STANDARDS. All materials shall be new and free of defects and shall be U.L. listed, bear the U.L. label or be labeled or listed with an approved, nationally recognized Electrical Testing Agency. Where no labeling or listing service is available for certain types of equipment, test data shall be submitted to prove to the Engineer that equipment meets or exceeds available standards. All listed, labeled or approved material shall be used only for the intended purpose.

100-3.6 UTILITY COMPANY FEES, CHARGES, COSTS. It is the Contractor's responsibility to contact the applicable Utility Company(s) to determine if any fees, charges or costs will be due the Utility Company(s) as required by the Utility Company(s) for temporary power, installations, hook-ups, etc. The associated fee, charge or cost for each utility shall be included in the Contractor's bid price.

100-3.7 TESTS. Systems shall be tested by the Contractor and placed in proper working order prior to demonstrating systems to the Owner. Refer to the requirements in each section for other applicable standards.

After work is completed a load balance test shall be made, as required, to demonstrate that with full lighting and mechanical load the balance between phases is within 5%. Unbalance beyond this limit shall be corrected.

System ground and lightning protection system ground shall be tested, as required, to demonstrate that the ground resistance does not exceed twenty-five (25) ohms per ground rod. All testing shall be done by methods approved by the Engineer and prior to the connection of the grounding conductors.

Perform such tests as required by any Authorities having jurisdiction over the site. Testing methods shall be acceptable to the Engineer and shall be submitted to the Engineer for review, a minimum of thirty (30) days prior to the scheduled test.

IDENTIFICATION

100-3.8 LAMINATED PHENOLIC PLASTIC NAMEPLATES. The Contractor shall provide nameplates for wiring systems and equipment as called for herein. All nameplates shall have beveled edges and one-half inch (1/2") lettering. If equipment is smaller than ten inches by six inches (10"x 6"), one-quarter inch (1/4") lettering may be used. Smaller lettering may be used with permission of the Engineer.

Nameplates shall be laminated phenolic plastic, black front and back with white core, with lettering etched through the outer covering. White engraved letters on black background. Emergency systems shall use red front and back with white core for nameplates. Attach nameplates with 4-40 stainless steel self tapping screws. Where conditions do not warrant piercing the enclosure "LOCTITE" brand adhesive or approved equal may be used with permission of the Engineer.

The following items shall be equipped with nameplates: all constant current regulators, pushbutton stations, control panels, system cabinets, terminal cabinets, disconnect switches, panelboards, circuit breakers, contactors or relays in separate enclosures, high voltage boxes and cabinets whether existing or planned by these specifications. Special electrical systems shall be identified at junction and pull boxes, terminal cabinets and equipment racks.

Nameplates shall adequately describe the function of the particular equipment involved. Where nameplates are detailed on the drawings, inscription and size of letters shall be as shown and shop drawing submitted for approval. Nameplates for panelboards and switchboards shall include the panel designation, panel name, circuit designation source of power and voltage and phase of the supply. For example, "Equip YY, Panel A, CKT XX fed from Panel XYZ, 480/277V, 3-phase, 4-wire." The name of the machine on the nameplates for a particular machine shall be the same as the one used on all motor starters, disconnects and pull box station nameplates for that machine. Nameplates shall include as a minimum the following:

a. Equipment Number

b. Equipment Name

c. Power Source w/Circuit Designation

d. Voltage Level and number of phases

All major pull and junction boxes in service areas, tunnels, above accessible ceilings and in accessible chases shall have nameplates identifying the feeder or system.
Systems with conductors exceeding 100 volts to ground shall have voltage identification nameplates with one-half inch (1/2") high letters on all panels, switches, pull boxes and junction boxes.

100-3.9 ADHESIVE BACKED CLOTH MARKERS. All raceways containing conductors exceeding 150 volts to ground shall have adhesive backed cloth/vinyl markers installed at each end and every thirty feet (30') in between identifying the voltage level (Example: "480 VOLTS"). If the conduit is less than ten feet (10') in length one marker is acceptable. The markers shall be installed so they are visible from floors and walkways. Normal power system shall use black letters, emergency systems shall use red letters.

The markers shall be "Brady" brand or approved equal with one-half inch (1/2") letters.

The markers shall be suitable for the environmental conditions encountered.

100-3.10 CONCRETE WORK. Concrete bases and pads for all equipment furnished by the Contractor shall be the responsibility of the Contractor unless noted otherwise.

The Contractor shall furnish all equipment anchor bolts and shall be responsible for their proper installation and accurate location.

100-3.11 EXCAVATING, TRENCHING AND BACKFILLING. The Contractor shall do excavating necessary for light bases, underground wiring, conduit and ductbanks and shall backfill trenches and excavations after work has been inspected. Care shall be taken in excavating that walls and footings and adjacent load bearing soils are not disturbed in any way, except where lines must cross under a wall footing. Where a line must pass under a footing, the crossing shall be made by the smallest possible trench to accommodate the conduit. Excavations shall be kept free from water. No greater length of trench shall be left open in advance of conduit laying than that which is authorized or directed by the Engineer.

Roots shall be removed to a level of eighteen (18") below furnished grades and deeper as required for duct runs, manholes and light pole bases. No roots shall be allowed to remain under the work.

Backfill about the structures shall be placed, where practical, as the work of construction

progresses. Backfilling on or against concrete work shall be done only when directed. Backfilling of duct lines shall progress as rapidly as the testing and acceptance of the finished sections of the work will permit and shall be carried to a crown approximately six inches (6") above the existing grades. In backfilling around duct lines, selected material shall be compacted firmly around the duct. Fill and backfill shall be clean and free from vegetable matter and refuse.

All trenches and other excavation left open by necessity shall be barricaded and guarded as required by OSHA or applicable codes and regulations.

100-3.12 WELDING. All welding and weld procedures shall be in accordance with AWS D1.1, Latest Edition. Qualifications of welders and welding operators shall be in accordance with AWS D1.1, Latest Edition. The welder qualification test shall be performed on a 1" A-36 Test Coupon in the 3G and 4G positions. The welder qualification shall be current within 12 months of the work being performed. Weld inspections shall be per the criteria set forth in AWS D1.1 for visual weld inspection.

DESIGNATION OF MATERIALS

100-4.1 CRITERION DESIGNATION OF MATERIALS AND EQUIPMENT. Where a criterion specification is designated for any material or equipment to be installed by the name or catalog number of one specific manufacturer, such designation is intended only for the purpose of establishing the style, quality, performance characteristics, etc., and is not intended to limit acceptability of competitive products. Products of other manufacturers which are approved by the Engineer as similar and equal will be equally acceptable unless specifically otherwise stated.

Where equipment or materials are specified by the use of the name and catalog number of more than one manufacturer, that equipment or material shall be one of those specified. No alternative will be acceptable.

Where no brand name is specified, the source and quality shall be subject to the Engineer's review and acceptance.

When a product is specified to be in accordance with a trade association or government standard, at the request of the Engineer, the Contractor shall furnish a certificate that the product complies with the referenced standard. Upon request of the Engineer, the Contractor shall submit supporting test data to substantiate compliance.

The Engineer shall be the sole judge of whether the proposed "or equal" is suitable for use in the work.

Each Bidder represents their bid is based upon the materials and equipment described in these specifications. Substitutions will not be considered unless a written request has been submitted to the Engineer in accordance with Item L-106, Submittals, Record Documents and Maintenance Manuals.

If the Contractor desires to use a method or type of equipment other than specified in the contract documents, a written request therefore shall be made to the Engineer. If approval is given, the Contractor will not be excused from producing work in conformity with contract requirements. If a trial use establishes that work does not meet the contract requirements, the Contractor shall take such action as the Engineer determines necessary to correct any deficiency in the work. No change in contract time will be made as a result of changes made under this Subparagraph. By making a request for substitution, the Contractor:

a. Represents that it has personally investigated the proposed substitution and determined the proposed substitution equal or superior in all respects to the specified method or equipment;

b. Represents that it will provide a warranty for the substitution identical in all respects to the warranty for the specified method or equipment;

c. Represents that it will coordinate the installation of the accepted substitute, making changes as may be required for the work to be complete in all respects at no additional cost to the Owner.

PROTECTION OF MATERIALS, EQUIPMENT AND WORK

100-5.1 REQUIREMENT FOR THE PROTECTION OF MATERIALS, EQUIPMENT AND WORK. Materials shall be stored so as to assure the preservation of their quality and fitness for the work. Stored materials, even though approved before storage, shall be subject to reinspection prior to their use in the work. The Contractor shall coordinate the storage of all materials with the Owner and the Engineer.
Owner-furnished materials, if any, shall be made available to the Contractor at the location specified herein. All costs of handling, transportation from the specified location to the site of the work, storage and installation of Owner-furnished materials shall be included in the Total Contract Price. All risk of loss or damage to Owner-furnished materials shall pass to the Contractor after delivery of said material to the site of the work. The Owner shall be entitled to deduct from any monies due or to become due to the Contractor any cost incurred by the Owner resulting directly or indirectly from a loss caused in whole or in part by the Contractor's handling, storage or use of Owner-furnished materials.

The Contractor shall protect electrical raceway, cables of any sort, lighting fixtures and associated support systems against damage from movement of equipment and material, welding, flame cutting, and other construction damage. Raceways and supporting structures for raceway and lighting fixtures shall not be used as access scaffolding at any time. Whenever welding or flame cutting operations occur above or near raceways, cables or lighting fixtures not shielded from such operations by concrete floor or other protective covers, the Contractor shall protect the raceways, cables, and lighting fixtures from damage by means of fireproof boards or blankets. Damaged materials shall be repaired or replaced, by and at the Contractor's expense, subject to the Engineer's direction and acceptance.

Surfaces of most equipment, such as panels, constant current regulators and circuit breakers, are

finished at the factory. Great care shall be exercised to prevent damage to this original finish during installation of the equipment and during construction work.

If the factory finish is damaged during the course of construction, the entire surface of the damaged component shall be refinished or replaced by and at the expense of the Contractor.

The refinished surface shall be equivalent in every respect to the original surface, including color, texture and smoothness. Refinishing paint, if furnished with the equipment, may be used; otherwise, the paint shall be obtained from the equipment manufacturer.

All cut edges of galvanized materials and marred or scratched galvanized surfaces shall be repaired using LPS-1G cold galvanizing compound or approved equal.

All threaded conduit joints shall use T&B Kopr-shield or Aluma-Shield or approved equal for galvanized and aluminum conduits respectively, as joint compound.

GENERAL CONSTRUCTION REQUIREMENTS

100-6.1 ADDITIONAL REQUIREMENTS. Provide the bracing, shoring, rails, guards, and covers necessary to prevent damage or injury. Do not leave energized electrical items unnecessarily exposed or unprotected. Protect personnel from exposure to contact with electricity. Deliver equipment and materials to the job site in their original, unopened, labeled containers. Store ferrous materials so as to prevent rusting. Store finished materials and equipment so as to prevent staining and discoloring.

All materials stored prior to installation, shall be stored in a bonded and secured facility.

All sheeting, shoring, dewatering and cleaning necessary to keep trenches and their grades in proper condition for the work to be carried on, including the removal of water by mechanical means, shall be the Contractor's responsibility.

METHOD OF MEASUREMENT

100-7.1 The items described in this section are incidental to other sections and shall not be measured for payment.

BASIS OF PAYMENT

100-8.1 No direct payment shall be made for the work described in this specification. The work described in this specification is incidental to other items and shall be paid for in the respective bid item of which it is a component part.

Request for Information
Supplemental Instruction

To: _____ **RFI - 000**

From: _____ Date: _____

Project: _____ AEP File No: 000-0000-000

_____

Reference:

Contract Drawing: _____

Shop Drawing: _____

Specification: _____

Other: _____

Subject:

Description:

By: _____

Reply:

Answered By: _____ 0/00/00
Project Manager Date

Cc:

APPENDIX A
FIGURE 1

END OF ITEM L-100

Item L-104 General Electrical Safety Requirements and Temporary Airfield Lighting

104-1.1 PURPOSE. The purpose of this item is to establish the proper safety guidelines necessary to protect aircraft, passengers, crews, the general public, all workers and vehicles involved in their daily tasks.

104-1.2 FAA ADVISORY CIRCULARS. All applicable requirements of the below listed Advisory Circulars, latest edition, standards and related reading shall be complied with:

A/C 150/5200-18B Airport Safety Self-Inspection

A/C 150/5210-5B Painting, Marking and Lighting of Vehicles used on an Airport

A/C 150/5340-18C Standards for Airport Sign Systems

A/C 150/5340-24 Runway and Taxiway Edge Lighting System

A/C 150/5340-26 Maintenance of Airport Visual Aid Facilities.

A/C 150/5370-2C Operational Safety on Airports during construction

Occupational Safety and Health Standards for the construction industry 29 CFR Part 1926/1910

ANSI C2 National Electrical Safety Code

NFPA 70 National Electrical Code

NFPA 70E Standard for Electrical Safety Requirements for Employee Work Places

The Contractor is responsible for obtaining and using the latest edition of the referenced FAA Advisory Circulars and related standards. This list is not all inclusive but is offered as a convenience to the Contractor.

104-1.3 GENERAL SAFETY PROVISIONS. The Contractor shall take safety and health measures in performing work under this contract. The Contractor shall meet with the Engineer to develop a mutual understanding relative to administration of the safety requirements. The Contractor is subject to applicable federal, state and local laws, regulations, ordinances, codes and orders relating to safety and health in effect on the date of this contract. Attention is invited to the regulations issued by the Secretary of Labor pursuant to the Contract Work Hours and Safety Standards Act and the Safety and Health Regulations for construction. The Contractor shall comply with the Secretary's Regulations as applicable and shall comply with specific requirements stated.

As a minimum, work place safety shall comply with NFPA 70E Standard for Electrical Safety Requirements for Employee Work Places, OSHA, federal, state and local requirements. Where a conflict in code requirements occurs the most stringent requirement shall govern.

During the performance of work under this contract, the Contractor shall comply with procedures

prescribed for control and safety of persons visiting the project site.
The Contractor is responsible for his personnel and for familiarizing each of his subcontractors with safety requirements.

The Contractor shall advise the Engineer of any special safety restrictions he has established so that the Owner personnel can be notified of these restrictions.

104-1.4 FIRE PREVENTION AND PROTECTION. All tools producing sparks or heat, open-flame heating devices, or operations utilizing such devices, etc., shall be in accordance with the local Fire Department and the Owner's Burn Permit procedures. Work shall not start until all requirements of the Burn Permit procedures are met.

Open-flame heating devices will not be permitted except by approval in writing. Such permission will not be granted unless the Contractor has taken reasonable precautions to make such devices safe. Burning trash, brush or wood on the project site will not be permitted. Approval for use of open fires and open-flame heating devices will in no way relieve the Contractor from the responsibility for any damage incurred because of fires.

Flammable liquids shall be stored and handled in accordance with the Flammable and Combustible Liquids Code, NFPA 30.

Open fires and salamanders will not be permitted in construction areas.

Smoking will not be permitted within the Air Operations Area (AOA) and in areas such as paint storage, fuel storage, and posted no smoking areas.

Welding, flame cutting, melting and other such operations in all operating areas, shall not be permitted until approved at the beginning of each workday by the Engineer. The Engineer may approve longer periods of time for welding and burning in some operating areas if the detailed safety procedures are established beforehand. Operating open flame devices shall not be left unattended in any area.

The Contractor shall provide the necessary fire fighting equipment and fire prevention methods and, before operations begin, clear all welding and cutting operations with the Engineer.

A Contractor's employee shall be assigned as fire watch for every welding and burning operation. He shall be equipped with 2 full 15 pound carbon dioxide fire extinguishers and shall check all areas around and below the welding or burning operation for fires. He shall continue this check for at least 60 minutes after the completion of the welding or burning operation.

The Contractor shall discontinue all burning, welding, or cutting operations, one hour prior to the end of the normal work day. The Contractor shall provide a workman to remain at the site for one hour after discontinuing these operations. This workman shall make a thorough inspection of the area for possible sources of latent combustion. Any unsafe conditions shall be corrected.

During operations involving possible fire hazard, the Contractor shall notify the Engineer and not proceed until clearance is obtained in writing. The Engineer may request a standby from the Aircraft Rescue and Firefighting (ARFF). However, this does not relieve the Contractor of his responsibility for welding and cutting safety.

104-1.5 SWITCHING. Electrical switching required for clearance to work on equipment

operating from electrical circuits will be performed only by Owner personnel authorized as safety operators for the specific equipment unless otherwise authorized in writing by the Engineer.

104-1.6 REMOVAL OF EQUIPMENT. When permanently removing equipment, the electrical wiring, conduit and control boxes shall be removed to the source of feed, unless otherwise specified or indicated.

After equipment has been removed, the electrical wiring diagrams, schematics, etc., shall be marked to show the change.

Conduit not removed shall have a pull string installed.

104-1.7 OTHER SAFETY REQUIREMENTS. Temporary wiring shall comply with NEC. Indiscriminate use of extension cords, portable cable or junction boxes creating tripping hazards as well as overloaded circuits will not be permitted.

Unplug portable electrical hand tools when not in use. Inadvertent operation of equipment can take place if it is left plugged into an energized receptacle.

Before maintaining or repairing any electrical equipment, it shall be disconnected from the power source.

Do not use any equipment that has frayed cords or three-wire plugs that have had the grounding prongs removed. Faulty equipment and tools shall be repaired by qualified electrical personnel.

Do not use metal ladders when working on electrical equipment.

EXCAVATION

104-2.1 EXCAVATION OPERATIONS. Methods of excavation, means of earth support, and manner of backfill shall be conducted with consideration for the safety of persons and work, and prevention of damage to adjacent pavement, utilities, structures and other facilities, due to settlement, lateral movement, undermining and washout. Excavation shall be performed in a manner to prevent surface water and subsurface or ground water from flowing into excavations, and to prevent water from flooding conduit trench and adjacent or surrounding area.

The Contractor and all his subcontractors performing trench excavation on this contract shall comply with Occupational Safety and Health Administration's (OSHA) trench excavation safety standards, 29 C.F.R., subpart P, s.1926.650, including all subsequent revisions or updates to these standards as adopted by the Department of Labor and Employment Security (DLES). The Contractor shall consider all available geotechnical information in his design of the trench excavation safety system. Inspections required by OSHA trench excavation safety standards shall be provided by the Contractor.

PROTECTION OF WORK

104-3.1 PROTECTION OF WORK. Provide adequate stand-by mechanical equipment for emergency use.

Excavations shall have substantial barricades and be posted with warning signs for the safety of persons. Warning lights shall be provided during hours of darkness.

Barricades shall be erected immediately around manhole openings when covers are removed or opened.

For personnel safety and to prevent possible interruption of major utility services encountered during excavation, the following procedures shall be followed:

a. Prior to performing any excavation work or any surface penetrations 6 inches or deeper (such as driving stakes more than 6 inches in the ground) on any ground surface, the Contractor shall obtain from the Engineer, local utilities, etc., the current up-to-date subsurface utility drawing of the particular area to be worked on.

b. All Agencies/Utilities, etc. that may be affected by the excavating shall be contacted by the Contractor so that all lines, pipes, etc., can be marked/staked.

c. The Contractor shall stake out all subsurface utilities i.e., high voltage cables, communication cables, pipe lines, etc., indicated within the scope of the work contemplated. All subsurface utilities shall be located by hand digging; hand digging shall extend for 5 feet on both sides of the subsurface utility.

d. After hand exposure of cable or pipelines, the Contractor shall obtain agreement from the Engineer, Agency/Utility on how much closer to cable or pipe the excavations can be permitted.

e. Detectable marker tape, with metalized foil core, printed with the words "CAUTION ELECTRIC LINE BELOW," "CAUTION WATER LINE BELOW," "CAUTION SEWER LINE BELOW," etc., as applicable, shall be installed 8 inches below grade over the underground utility. Tape shall be in accordance with Item L-108, Installation of Underground Cable for Airports.

f. The Contractor shall notify the Engineer, 72 hours prior to the start of excavation work or surface penetration, to enable the Engineer to review measures being taken to prevent hazard to employees and to prevent possible damage to subsurface utilities. Where emergency conditions preclude the 72 hours advance notification, the Contractor shall nevertheless inform the Engineer of his intention to initiate work.

g. After all existing utilities have been located and marked or staked, the Contractor shall proceed with excavating work, or other surface penetration work. The Contractor however, shall temporarily halt any machine excavation work or other surface penetration when approaching within 5 feet of the staked out subsurface utility until the Contractor has hand excavated down to expose the utility to exactly fix its location.

h. No digging, dirt moving or other heavy equipment shall enter physically any approved construction area before all utilities have been located and properly staked out. It is the Contractor's responsibility to locate all utilities before digging, sawing, coring, boring, etc.. Any damage caused by digging, sawing, boring, coring, etc., is the Contractor's responsibility for repair. Any damage must be reported immediately to the Engineer. No repair shall be attempted without approval.

i. All high voltage cables shall be disconnected before excavation is attempted.

j. To protect subsurface utilities, provide as a minimum, a 1 inch thick steel plate cover over electrical duct, cables and other subsurface utilities when heavy equipment is being used in the area.

k. The requirements listed above shall be considered incidental to the item for which the excavation is required.

SAFETY TAGGING AND LOCKOUT

104-4.1 SAFETY WITH ELECTRICAL CIRCUITS AND EQUIPMENT. No one may work on an energized circuit without written permission from the Contractor's project manager. The Contractor's project manager shall review the circumstances and the necessary safety precautions with the Engineer prior to giving permission for the "hot" work. The Contractor assumes all liability in connection with any work on energized circuits.

No one may disconnect or cause to be disconnected any electrical circuit before permission is requested from and granted by Airport Operations or authorized representative through the Engineer.

Identification markings on building light and power distribution circuits shall not be relied on for established safe work conditions. Always verify the proper safe "deenergized" conditions with properly operating test equipment.

Before any circuit supplying radar, ILS, weather, VORTAC, airport beacon, runway/taxiway lighting equipment or any other equipment is disconnected, permission must first be granted by Airport Operations or their authorized representative, and, if applicable, FAA Airways Facilities Office.

Work shall not commence on any circuit until:

a. The circuit is correctly identified in the presence of the electrical contractor's superintendent or foreman, the Engineer, Airport Operations, or their authorized representative.

b. After identity of the circuit is established, and the circuit disconnected, the time and date shall be recorded by the Engineer.

c. The switch shall be locked in the open position or opened in a manner which will prevent accidental restoration.

d. The circuit shall be tagged with an approved warning tag by the electrical contractor's superintendent. The tag shall state, the company's name, the electrician's name responsible for the disconnection, date and time and the project name and project number.

Restoration shall be accomplished and tags removed only by the electrical contractor's superintendent in the presence of Airport Operations, or their authorized representative.

The Engineer shall record time, date and operational status of circuit after restoration.

No circuit shall be disconnected or unplugged before color code identification by taping.

No circuit shall be disconnected at power source before proper safety precautions are taken to prevent accidental restoration.

When possible, circuits shall be restored by the same person who disconnected the circuit. When not possible, Airport Operations or their authorized representative shall perform restoration.

e. As a minimum the Lock/Tag/Try procedure shall comply with NFPA 70E and the Owner's requirements.

TEMPORARY AIRFIELD LIGHTING

104-4.2 TEMPORARY AIRFIELD LIGHTING. Temporary electrical fixtures and conductors are allowable when necessary, but shall be installed as follows:

a. Temporary lights shall be bolted to the pavement in a manner rendering the light stationery and allowing space for conductors to enter or exit and to be spliced.

b. When the above is not practical, lights shall be fastened to a weighted object adaptable for the purpose and of sufficient weight to inhibit movement by jet engine blast.

c. Temporary conductors supplying temporary lights shall be installed in a rigid galvanized steel conduit system and secured every five feet to prevent movement by jet engine blast.

d. All joints or splices in temporary conductors shall have heat shrink tubing with integral sealant applied to secure mechanical and electrical connection and prevent water entry.

e. All plug-in connections shall have heat shrink tubing with integral sealant applied to prevent accidental disconnection and shall be color code taped to expedite quick, efficient disconnection and restoration.

f. Temporary airfield lighting and signage shall conform as closely as possible to permanent locations normally on the taxiway or runway and that shall guide aircraft in a safe path away from all possible accident prone areas.

Closed taxiways and runways shall be so marked in a manner acceptable to FAA and the Owner and said marking shall be kept in acceptable condition. This item shall include, at the Engineer's discretion the temporary removal or covering of airfield signage.

CAUTION: The series lighting circuit must always be complete before a regulator is energized. Normal circuit voltage is less than 5,000 volts, open circuit voltage can be more than 10,000 volts. All personnel shall be instructed to protect the integrity of the lighting circuit. Turn off, lock out and tag the constant current regulator at the vault before opening the circuit. Continuity of the circuit shall be checked before the regulator is reconnected and reenergized.

The installation and/or removal of lighting equipment may be critical to airport operations; therefore, the Contractor shall follow work schedules established in the plans and specifications or as directed by the Engineer. The temporary system shall be installed in accordance with the contract documents, FAA Advisory Circulars and if applicable the National Electrical Code and/or local code requirements.

The Contractor shall provide temporary wiring as required to reconnect existing airfield lighting and signage to provide guidance for aircraft to pass through the construction areas on those taxiways/runways, which must remain open.

It shall be the Contractor's responsibility to determine that all airfield lighting circuits, except those

that are serving closed taxiways or runways, are completely operational, using tower controls, at the end of each work shift and shall so certify to the Engineer before leaving the work site. Day shift report of system operation shall be at 4 p.m. Second shift report shall be 1 hour before dark. Any other shift shall report 1 hour prior to the need for airfield lighting or as determined by the Engineer. Should bad weather cause poor visibility the Engineer may require additional status reports of system operability and may call for the operation of the lighting system at any time. In the event of lighting system failure, the Contractor shall immediately take the necessary steps to restore proper operation.

Whenever the scope of work requires connection to an existing circuit, the circuit's insulation resistance shall be tested, in the presence of the Engineer. This test shall be performed prior to any activity affecting the respective circuit. The Contractor shall record the results on the forms included in Item L-131. When the circuit is returned to its final condition, the circuit's insulation resistance shall be checked again in the presence of the Engineer. The Contractor shall record the results on the forms included in Item L-131. The second reading shall be equal to or greater than the first reading or the Contractor shall make the necessary repairs, to the circuit, to bring the second reading above the first reading. All repair costs including a complete replacement of the L-823 connectors, L-830 transformers and L-824 cable, etc. if necessary, shall be borne by the Contractor. All test results shall be submitted in the Operation and Maintenance Manuals, see Item L-106, Submittals, Record Documents and Maintenance Manuals.

TEMPORARY AREA/BUILDING LIGHTING

104-4.3 TEMPORARY ELECTRICAL AND LIGHTING INSTALLATION. Temporary electrical and/or lighting fixtures shall be provided in operational areas of buildings where required to maintain public safety and continued airport operations.

Temporary lighting must be installed to ANSI/OSHA standards for impacted area.

Temporary installations shall be approved by Airport Operations or their authorized representative.

The cost of temporary area/building lighting shall be absorbed in and considered incidental to the various work items.

104-4.4 MISCELLANEOUS REGULATIONS. No counterpoise conductors (or any other conductors) may be joined, connected, or affixed to any terminal, grounding electrode, or other point or attachment by any method except those approved by the Engineer.

All counterpoise or grounding systems, when severed or damaged, shall be immediately repaired by the Contractor in accordance with Item L-108, Installation of Underground Cable for Airports and inspected by the Engineer.

No high voltage switch shall be engaged or disengaged under load.

All backhoes, cranes, etc., shall be enclosed by safety pylons or other approved markers and rope festooned between the pylons, where applicable.

All security gates in use by contractors are the responsibility of the Contractor, and must be used in a fully secure manner. Any damage to a security gate shall be reported immediately to the Engineer.

METHOD OF MEASUREMENT

104-5.1 The items described in this section are incidental to other sections and shall not be measured for payment.

BASIS OF PAYMENT

104-6.1 No direct payment shall be made for the work described in this section. The work described in this section and temporary airfield lighting is incidental to the demolition pay item.

END OF ITEM L-104

Item L-105 Alterations, Removal and Demolition

GENERAL

105-1.1 DEFINITIONS. Alterations shall mean any change or rearrangement in the component parts, including structural, mechanical, electrical systems, or internal or external arrangements of an existing structure.

Removal shall mean the dismantling of existing materials, components, equipment, and utilities. Removed items shall be handled, prepared for storage, transported to storage areas as specified.

Demolition shall mean the dismantling and disposal of existing materials, components, equipment, and utilities which cannot or will not be reused or which will have no salvage value, or which cannot be reused due to unrepairable damage caused by age, non-demolition related reasons, etc. All demolished items not designated to be turned over to the Owner shall be disposed of in a safe manner and at a location acceptable to the Owner.

All items to be turned over to the Owner shall be properly enclosed or boxed to protect the items from damage and transported by the Contractor to a location on the Owner's property, designated by the Engineer.

The installation and/or removal of lighting equipment may be critical to airport operations; therefore, the Contractor shall follow the work schedule established in the plans and specifications or as directed by the Engineer. The system shall be installed in accordance with the National Electrical Code and/or local code requirements.

The Contractor shall provide temporary wiring as required to reconnect existing circuits to provide guidance for aircraft to pass through the construction areas on those taxiways/runways which must remain open. The Contractor shall check all temporary circuits before dark each day to assure that they are operational. In the event of failure, the Contractor shall immediately take steps to restore operation. The cost of temporary and reconnected lighting shall be absorbed in the various work items.

105-1.2 CONDITION OF EXISTING FACILITIES. The Contractor shall verify the areas, conditions, and features necessary to tie into existing construction. This verification shall be done prior to submittal of shop drawings, fabrication or erection, construction or installation. The Contractor shall be responsible for the accurate tie-in of the new work to existing facilities.

Special attention is called to the fact that there may be piping, fixtures or other items in the existing systems which must be removed or relocated in order to perform the alteration work. All conduit, wiring, boxes, etc., that do not comply with these specifications shall be removed or corrected to comply with these specifications. All unused conduit not removed shall be identified and a pull line shall be installed. The work shall include all removal and relocation required for completion of the alterations and the new construction.

Whenever the scope of work require connection to an existing circuit, the circuits insulation

resistance shall be tested, in the presence of the Owner and Engineer. The Contractor shall record the results on the forms included in these specifications. When the circuit is returned to its final condition, the circuits insulation resistance shall be checked again in the presence of the Owner and Engineer. The Contractor shall record the results on the forms included in these specifications. The second reading shall be equal to or greater than the first reading or the Contractor shall make the necessary repairs to the circuit to bring the second reading above the first reading. All repair costs including a complete replacement of the cable, if necessary, shall be borne by the Contractor. All test results shall be submitted in the Operation and Maintenance Manuals as described in Item L-106, Submittals, Record Documents and Maintenance Manuals.

105-1.3 OCCUPANCY AND USE OF EXISTING FACILITIES. The Owner will occupy and use the facilities within the areas of work during the entire construction period. The Contractor shall be required to plan and coordinate his activities in order to provide all necessary controls for the abatement of dust, noise, and inconvenience to the Owner personnel during all phases of the work.

105-1.4 SAFETY REQUIREMENTS. The Contractor shall conduct alterations and removal operations in a manner that will ensure the safety of persons in accordance with the requirements of CFR 29 PART 1926 and 1910.

105-1.5 CLASSIFICATION OF REMOVED/DEMOLISHED ITEMS. Existing materials and equipment indicated to be removed will be classified as "salvageable" and shall remain the property of the Owner or will be classified as "debris" and shall be disposed of legally off the airport.

Reusable salvaged items:

Salvaged materials and equipment shall be reused in the work as described on the contract drawings, unless noted otherwise.

Items classified as debris shall be legally disposed of off the airport property. The cost of such disposal shall be included in the cost of other items of work.

Retained salvaged items:

Salvaged materials and equipment to be retained by the Owner but not reused in the work shall be turned over to the Owner at a site at the facility to be determined by the Owner. Retained salvaged items shall be stored on Owner property where indicated by the Owner.

105-1.6 TEMPORARY PROTECTION. The Contractor shall provide and maintain the following requirements.

Protection of persons and property shall be provided throughout the progress of the work in accordance with these specifications.

EXECUTION

105-2.1 DISCONNECTING UTILITIES. Prior to the start of work, the necessary utilities serving each area of alteration or removal will be shut off by the Owner and shall be disconnected and sealed by the Contractor, as required. Lockout/Tag/Try procedures shall be utilized in accordance with Item L-104, General Electrical Safety Requirements and Temporary Airfield Lighting.

105-2.2 TEMPORARY UTILITY SERVICES. The Contractor shall install temporary utility services in satisfactory operating condition before disconnecting existing utilities. Such temporary services shall be maintained during the period of construction and removed only after new permanent services have been tested and are in operation.

105-2.3 REMOVAL WORK. The Contractor shall not disturb the existing construction beyond that indicated or necessary for installation of new work. Temporary shoring and bracing for support of building components to prevent settlement or other movement shall be as indicated and as required to protect the work.

The Contractor shall provide protective measures to control accumulation and migration of dust and dirt in all areas of work, particularly those adjacent to occupied areas. The Contractor shall remove dust, dirt, and debris from the areas of work daily.

105-2.4 SALVAGEABLE MATERIALS AND EQUIPMENT. The Contractor shall remove all salvageable materials and equipment in a manner that will cause the least possible damage thereto. Removed items which are to be retained by the Owner shall be carefully handled, stored, and protected.

The Contractor shall provide identification tags on all items boxed or placed in containers, indicating the type, size, and quantity of materials.

105-2.5 BUILDINGS AND STRUCTURES. The Contractor shall perform removal operations in existing buildings as indicated and as otherwise required to complete the work.

The Contractor shall dismantle steel components at field connections and in a manner that will prevent bending or damage.

The use of flame-cutting torches will be permitted only when other methods of dismantling are not practical, and when approved in writing by the Owner or Engineer.

105-2.6 ELECTRICAL EQUIPMENT AND FIXTURES. Wiring systems and components shall be salvaged. Loose items shall be boxed and tagged for identification.

All unused conduit not removed shall have a pull string installed and shall be noted on the record drawings.

Primary, secondary, control, communication, and signal circuits shall be disconnected at the

point of attachment to their distribution system.

The Contractor shall remove and salvage constant current regulators, circuit breakers, panelboards, and similar items. These items shall be boxed, and tagged for identification according to type and size.

The Contractor shall remove and dispose of conductors and conduits not used in the finished work and shown to be demolished on the plans.

DEMOLITION

105-3.1 DEMOLITION OPERATIONS. Demolition operations shall be conducted to ensure the safe passage of persons to and from facilities occupied and used by the Owner, and to prevent damage by falling debris or other cause to adjacent buildings, structures, and other facilities.

The sequence of operations shall be such that maximum protection from inclement weather will be provided for materials and equipment located in partially dismantled structures.

105-3.2 MAINTAINING TRAFFIC. Demolition operations and removal of debris to disposal areas shall be conducted to ensure minimum interference with runways, taxiways, aprons, roads, streets, walks, and other facilities occupied and used by the Owner.

Streets, walks, runways, taxiways and other facilities occupied and used by the Owner shall not be closed or obstructed without written permission.

105-3.3 REFERENCE STANDARDS REQUIREMENTS. Demolition operations shall be conducted to ensure the safety of persons in accordance with ANSI A 10.6 Safety Requirements for Demolition.

Demolition shall be conducted in accordance with O.S.H.A., State and local requirements.

DISPOSAL OF DEMOLISHED MATERIALS

105-4.1 GENERAL. The Contractor shall dispose of debris, rubbish, scrap, and other non-salvageable materials resulting from demolition operations. Demolished materials shall not be stored or disposed of on Airport property.

105-4.2 REMOVAL FROM OWNER PROPERTY. Materials classified as debris shall be transported from Owner property and legally disposed at no additional cost to the Owner. Permits and fees for disposal shall be paid by the Contractor.

ALTERATION WORK

105-5.1 GENERAL. Cutting, patching, repairing, and other alteration work shall be done by tradesman skilled in the particular trade or work required.

Where required to patch or extend existing construction, or both, such alteration work shall match existing exposed surface materials in finish, color, texture, and pattern.

Salvaged items for reuse shall be as approved by the Engineer.

METHOD OF MEASUREMENT

105-6.1 This item includes all materials, labor, transportation incidentals and services required for the airfield and parking lot electrical demolition as shown on the plans. It is the intent of the demolition pay item that all equipment, devices, fixtures, wiring, materials, systems and appurtenances, etc. which are no longer required as a result of the project to be removed shall be measured by the lump sum.

BASIS OF PAYMENT

105-7.1 Payment will be made at the contract price for required electrical demolition. This item includes all materials, labor, transportation, incidentals and services required for the demolition as shown on the plans. This item includes any temporary wiring, fixtures, etc. required to maintain the existing airfield lighting systems to the satisfaction of the Owner and Engineer. It is the intent of the demolition pay item that all equipment, devices, fixtures, wiring, materials, systems and appurtenances, etc. which are no longer required as a result of the project be removed.

Payment will be made under:

Item L-105-1	Electrical Demolition per lump sum

END OF ITEM L-105

Item L-106 Submittals, Record Documents and Maintenance Manuals

DESCRIPTION

106-1.1 GENERAL. The items described in this section are applicable to all electrical work by the Contractor. Where the contract special conditions or general provisions also apply, the stricter of the documents shall apply.

106-1.2 SCOPE. This section includes the requirements for submittals, record documents operation and maintenance (O&M) manuals. All submittals and O & M Manuals shall be submitted in book form as described in this item.

SHOW DRAWINGS AND SAMPLES

106-2.1 REQUIREMENTS FOR SHOP DRAWINGS AND SAMPLES. Shop drawings are drawings, diagrams, illustrations, schedules, performance charts, brochures and other data which are prepared by the Contractor or any subcontractor, manufacturer, supplier or distributor, and which illustrate some portion of the work.

Submittal data for electrical materials and equipment shall consist of shop drawings and/or catalog cuts showing technical data as necessary to evaluate the material or equipment, to include dimensions, wiring diagrams, performance curves, ratings, control sequence and other descriptive data necessary to describe fully the item proposed and its operating characteristics.

Samples are physical examples furnished by the Contractor to illustrate materials, equipment or workmanship, and to establish standards by which the work will be judged. Each sample shall be accompanied by the manufacturer's instructions regarding installation, operation and maintenance and shall be identified by item number, and specification.

The Contractor shall review, stamp with his approval and submit to the Engineer, one (1) reproducible and seven (7) prints of shop drawings, seven (7) copies of submittal books and three (3) sets of samples where required, as described in this item, within fifteen (15) days of notice to proceed.

If the Contractor desires to deviate from the requirements of the contract documents, the Contractor shall separately submit all deviations from the requirements of the contract documents in shop drawings or samples. The submission shall direct in writing the specific attention of the Engineer to the deviations, and shall contain all required data and supporting documentation necessary for an evaluation of the proposed deviation. Any submission or deviation not identified as heretofore mentioned shall be rejected and require resubmission. Separate written approval of all deviations by the Engineer for all design related deviations and by the Owner for all other deviations is required before the Contractor may perform the work covered by such deviation. By requesting a deviation, the Contractor makes the representations contained in this section.

If approval is given, the Contractor will not be excused from producing work in conformity with contract requirements. If a trial use establishes the work does not meet the contract requirements, the Contractor shall take such action as the Engineer determines necessary to meet the contract requirements. No change in contract time will be made as a result of changes made under this subparagraph. By requesting a deviation, the Contractor makes the representations contained in this section.

106-2.1.1 Substitutions will only be considered after bid date only if the following conditions are met and allowed by other sections of these specifications.

a. Request for substitution is submitted no later than 15 days after notice to proceed for construction is awarded to the Contractor.

b. Request for substitution includes appropriate credit to the project cost. This credit must be submitted with request for substitution in order for substitution to receive any consideration.

c. Request for substitution shall include the name of the material or equipment for which it is to be substituted, drawings, cuts, performance and that data or any other data or information necessary for the Engineer to determine that the equipment meets all specifications and requirements.

d. Where permitted and approved, the substitution must conform to space requirements. Substitutions that cannot meet space requirements, which is the substitution Installer's responsibility whether approved or not, shall be replaced at the Contractor's expense. Any substitution modifications of related systems, as a result of the substitution, shall be made at the Contractor's expense.

e. The Contractor represents that it has personally investigated the proposed substitution and determined that the proposed substitution is equal or superior in all respects to the specified method or equipment.

f. The Contractor represents that it will provide a warranty for the substitution identical in all respects to the warranty for the specified method or equipment.

g. The Contractor represents that it will coordinate the installation of the accepted substitute, making changes as may be required for the work to be complete in all respects at no additional costs to the Owner.

The Engineer shall be the sole judge of whether the proposed "or equal" is suitable for use in the work.

106-2.1.2 Substitutions will be considered prior to bid date only if all the following conditions are met:

a. A written request has been submitted to the Engineer for approval at least 10 days prior to the bid date.

b. Request for substitution shall include the name of the material or equipment for which it is to be substituted, drawings, cuts, performance and that data or any other data or information necessary for the Engineer to determine that the equipment meets all specifications and requirements.

c. Substitution is approved and included in an addendum.

By approving and submitting shop drawings the Contractor thereby represents that he/she has determined and verified all field measurements, field construction criteria, materials, catalog numbers and similar data and that the Contractor, has checked and coordinated each shop drawing and sample with the requirements of the work of the contract documents.

Unless otherwise stated in the contract documents, the Engineer will review and approve shop drawings within fifteen (15) days after receipt, but only for conformance with the design concept of the project and with the information given in the contract documents. The Engineer's approval of a separate item shall

not indicate approval of an assembly in which the item functions.

The Contractor shall make any corrections required by the Engineer and shall resubmit the required number of corrected shop drawings or new samples until approved. The Contractor shall direct specific attention in writing or on resubmitted shop drawings to revisions other than the corrections requested by the Engineer on previous submissions.

The Engineer's approval of shop drawings shall not relieve the Contractor of responsibility for any deviation from the requirements of the contract documents unless the Contractor has informed the Engineer in writing of such deviation at the time of submission and the Engineer has given written approval to the specific deviation. **The Engineer's approval shall not relieve the Contractor from responsibility for errors or omissions in the shop drawings or samples.**

The submittals will be reviewed for design intent and general compliance with the information contained in the drawings and specifications. The Contractor is responsible for dimensions, quantities, fabrication processes and methods of construction, coordination of the Contractor's work with that of all trades. The Contractor shall be responsible for satisfactory performance of his work and supplying a complete and operational system.

No portion of the work requiring a shop drawing submission shall be commenced until the submission has been approved by the Engineer. All such portions of the work shall be in accordance with approved shop drawings and samples.

106-2.2 SUBMITTAL BOOKS. Submittal books shall consist of a hard cover, view type, 3-ring binder sized to hold 8 ½" x 11" sheets.

Each binder is to be adequately sized to comfortably hold required submittals. Minimum spline size to be 1", maximum spline size to be 3" (provide additional binders if 3" size is not sufficient to properly hold submittals). Each binder shall be adequately sized to hold the submittal information plus an additional 25% of the submittal sheet count.

Binder covers to have outer clear vinyl pocket on front and back cover (to hold 8 ½" x 11" sheet) and on spline (to hold spline width x 11" sheet). Binders shall be Wilson Jones Standard Locking D-Ring View Binders or approved equal. Provide correct designation of project in each pocket, see "EXAMPLES" Appendix A Figures 1 and 2 included at the end of this section. Description sheet is to be white with black letters, maximum sheet height of 11" high and full width of pocket. Description is to describe project and match project drawing/specification description. Description to include submittal type. One (1) for the Airfield Lighting System materials (black) and one (1) for the Airfield Lighting Control System (blue).

The contractor is allowed the option to provide electronic submittals in PDF format in lieu of printed submittals. Submittals provided in electronic format shall conform to the same requirements identified herein for printed copies including legibility, organization, submittal markings, Indexes, and cover sheets.

106-2.3 SUBMITTAL BOOK CONTENTS. Submittal books to include:

a. First sheet(s) in book shall be a photocopy of the cover sheet see Appendix A Figure 1.

b. The second sheet shall be a table of contents.

c. Third sheet shall be prepared and filled out by the Contractor and shall list project addresses, see Appendix A Figure 3.

d. Fourth sheet shall also be filled out by Contractor and list project information for project, Appendix A Figure 4.

e. Provide Wilson Jones, reinforced clear, ring binder indexes, 5 tab No. WJ-54125 or approved equal with the appropriate specification section number, and a typed index for each section.

f. Submittals consisting of marked catalog sheets or shop drawings shall be inserted in the binder in proper order. Submittal data shall be presented in a clear and thorough manner. Original catalog sheets are preferred. Photocopies are acceptable provided they are as good a quality as the original. Clearly and boldly mark each copy to identify pertinent products or models applicable to this project. Indicate all optional equipment and delete non-pertinent data. Submittals for components of electrical equipment and systems shall identify the equipment for which they apply on each submittal sheet. Markings shall be boldly and clearly made with arrows or circles (highlighting is not acceptable).

g. Shop Drawings: Drawings to include identification of project and name of Engineer, Contractor, subcontractors and suppliers, data, number sequentially and indicate the following:

(1) Fabrication and erection dimensions.

(2) Arrangements and sectional views.

(3) Necessary details, including complete information for making connections with other work.

(4) Kinds of materials and finishes.

(5) Descriptive names of equipment.

(6) Modifications and options to standard equipment required by the work.

(7) Leave blank area, size approximately 4 x 2 ½ inches, near title block (Engineer's stamp imprint).

(8) Point-to-point wiring diagrams.

(9) Conduit/raceway rough-in drawings.

(10) See specific sections of specifications for further requirements.

106-2.4 SUBMITTAL BOOKS PRODUCT DATA. Technical data is required for all items as called for in the specifications regardless if item furnished is as specified.

a. Submit technical data verifying that the item submitted complies with the requirements of the specifications. Technical data shall include manufacturer's name and model number, dimensions, weights, electrical characteristics, and clearances required. Indicate all optional equipment and changes from the standard item as called for in the specifications. Furnish drawings, or diagrams, dimensioned and in correct scale, covering equipment, showing arrangement of components and overall coordination.

b. In order to facilitate review of product data, insofar as practicable, they shall be noted, indicating by cross reference the contract drawings, note, and/or specification paragraph numbers where item(s) occur in the contract documents. At the end of each section insert a copy of the applicable specification.

c. See specific sections of specifications for further requirements.

106-2.5 PROCESSING SUBMITTALS. Submit a minimum of seven (7) submittal books with separate tag marking on each copy for the Owner (1), Engineer (4), Contractor and Subcontractor (See other sections of these specifications for additional quantity requirements.)

The Contractor shall review the submittal books before submitting to the Engineer. No request for payment will be considered until the submittal book has been reviewed and submitted for approval.

Submit under provisions Section 1. of the Special Conditions and this section of the specifications, whichever is the most strict.

Product Data: For standard manufactured materials, products and items, submit one (1) copy or sets of data (per book). If submittal is rejected, resubmittal shall contain same quantity of new data.

Shop Drawings: For custom fabricated items and systems shop drawings, initially submit a transparency (suitable for reproduction) together with two (2) prints made therefrom. When submittal is acceptable, furnish one (1) print per book made from the accepted transparency.

Acceptance: When returned to Contractor, the front of each submittal section will be marked with the Engineers stamp. If box marked "Not Approved" or "Returned for Correction" is checked, submittal is not approved and Contractor is to correct and resubmit as noted. Contractor is to comply with notation making necessary corrections on submittal and resubmit for final record.

If submittal is marked "Approved as Noted" the Contractor shall make the necessary corrections to the submitted items and no resubmittal is necessary.

If the submittal is marked "Approved" the Engineer took no exceptions to the submitted items.

If the submittal is marked “See Transmittal Letter Comments”, the Contractor shall make or note any corrections or requirements identified in the comments. Corrections or comments made on the shop drawings during this review do not relieve the Contractor from compliance with requirements of the drawings and specifications. This check is only for review of the general conformance with the design concept of the project and general compliance with the information given in the contract documents. The Contractor is responsible for; confirming and correlating all quantities and dimensions; selecting fabrication processes and techniques of construction; coordinating his or her work with that of all other trades and performing all work in a safe and satisfactory manner.

Note that the approval of shop drawings or other information submitted in accordance with the requirements herein before specified, does not assure that the Engineer, or any other Owner's authorized representative, attests to the dimensional accuracy or dimensional suitability of the material or equipment involved, the ability of the material or equipment involved or the mechanical/electrical performance of equipment. Approval of shop drawings does not invalidate the plans and specifications if in conflict, unless a letter requesting such a change is submitted and approved on the Engineer's letterhead.

106-2.6 DELAYS. The Contractor is responsible for delays in project time accruing directly or indirectly from late submissions or resubmissions of shop drawings, or product data.

106-2.7 RE-SUBMITTALS. The Engineer shall be reimbursed the cost to review resubmittals subsequent to the second submittal.

RECORD DOCUMENTS

106-3.1 PROGRESS AND RECORD DRAWINGS. Keep one set of blue line prints on the job and neatly mark up design drawings each day as components are installed. Different colored pencils shall be used to differentiate each system of electrical work. All items on progress drawings shall be shown in actual location installed. Drawings shall be inspected weekly for compliance and accuracy. Progress payments shall be withheld if the marked-up drawings are not current.

All underground ducts, conduits, drains, ground grids, force mains, etc., (all underground utilities) installed by the Contractor or located by the Contractor during the construction of this project shall be surveyed. The data shall be sufficient to accurately relocate the utility at a later date. The data shall include North-South and East-West coordinates and an elevation. This data shall be recorded on the as-built drawings.

All manholes and other structures installed by the Contractor shall be surveyed. The center of the structure shall be located by a North-South and East-West coordinate and an elevation. This data shall be recorded on the as-built drawings.

Change the equipment schedules to agree with items actually furnished. At the end of the project, all changes shall be transferred to a set of reproducible transparencies of the design drawings marked "As Built" and dated and stamped by the Contractor.

Prior to request for final payment, furnish a set of "As Built" sepia originals and four sets of prints along with the marked set defined above to the Engineer for approval. The final sepia originals shall be professionally drafted to indicate "As Built" conditions to the Engineer. The prints shall be stamped "As-Built", signed and dated by the electrical contractor.

The Contractor's failure to produce representative "As Built" drawings in accordance with requirements specified herein, shall be cause for the Engineer to produce such "As-built" drawings and the Contractor shall reimburse the Engineer for all costs to produce a set of "Record" drawings to the Owner’s satisfaction.

Complete and sign the Progress and Record Document Certification Form in Appendix A Figure 5 and submit with the Operation and Maintenance Manuals. Submit one form for each Contractor/Subcontractor providing as-built information, include a copy of each form in the O & M Manuals.

106-3.2 REQUIREMENTS FOR DISPLAY DRAWINGS. An "as built" control and field wiring diagram shall be displayed in the vault. Size D minimum framed and installed. In addition to the wiring diagram (showing actual connections between the system components), a "schematic" diagram shall be provided. A schematic diagram to show the electrical interrelation among the different systems components in the simplest way possible without being cluttered with actual wiring. It should show the path of the signal flow or the power flow. These drawings shall be submitted to the Engineer for

approval. The Contractor shall coordinate the requirements with the Owner or his authorized representative and provide the above at no additional cost to the Owner.

OPERATION AND MAINTENANCE MANUALS

106-4.1 REQUIREMENTS FOR OPERATION AND MAINTENANCE MANUALS. Within each major division of work, each specification section in the contract documents which require submission of O & M information shall be individually identified by a typed index tab. The Contractor shall provide four (4) copies of manufacturer's manuals for all installed equipment. As a minimum, it shall contain the following:

a. Safety precautions used while maintaining the equipment.

b. Theory of circuit and system operation.

c. Complete schematic and interconnecting wiring diagrams

d. Complete parts list with each circuit component keyed to designations assigned on schematics and wiring diagrams. Complete information shall be given for each part to permit ordering for replacement purposes. This information shall include the components rating, name of manufacturer and the manufacturer's part number in addition to the following:

e. Recommended preventive maintenance, including care, cleaning, lubrication, service schedules, etc.

f. Troubleshooting procedures.

g. Physical characteristics (weight, size, mounting dimensions, etc.).

h. Installation instructions.

i. Operating instructions.

j. Recommended spare parts and usage for a 1 year period.

k. Submit for checking purposes a specific set of written operating instructions on each item which requires instructions to operate. After approval, provide one copy for insertion in each Operation and Maintenance Manual.

l. Submit for approval maintenance information consisting of manufacturer's printed instructions and parts list for each major item of equipment. After approval, insert information in each Operations and Maintenance Manual. Detailed schematic diagrams shall be furnished for all electrical/electronic equipment.

m. Bill of materials.

n. Physical layout plans.

o. Equipment supplier list.

p. Panel schedules shall be submitted with the respective panel data.

q. Special instructions.

r. Service maintenance contracts including the name, address and 24 hour phone number and contact of manufacturers authorized repair company.

There shall be no "Black Boxes" for which there are no schematic/wiring diagrams.

106-4.2 OPERATION AND MAINTENANCE MANUALS. O & M Manuals shall consist of hard cover, view type, 3-ring binders sized to hold 8 ½" x 11" sheets.

Each binder is to be adequately sized to comfortably hold required submittals. Minimum spline size to be 1", maximum spline size to be 3" (provide additional binders if 3" size is not sufficient to properly hold submittals. Each binder shall be adequately sized to hold the submittal information plus an additional 25% of the submittal sheet count.

Binder covers to have outer clear vinyl pocket on front and back cover (to hold 8 ½" x 11" sheet) and on spline (to hold spline width x 11" sheet). Binders shall be Wilson Jones Standard Locking D-Ring View Binders or approved equal. Provide correct designation of project in each pocket, see "EXAMPLES" Appendix A Figures 6 and 7 included at the end of this section. Description sheet is to be white with black letters, maximum sheet height of 11" high and full width of pocket. Description is to describe project and match pocket drawing/specification description. Description to include submittal type. One (1) for Airfield Lighting System Materials (black) and one (1) for the Airfield Lighting Control System (blue).

106-4.3 OPERATION AND MAINTENANCE MANUAL CONTENTS. O & M Manuals to include:

a. First sheet in binder shall be a photocopy of the cover sheet see Appendix A Figure 6.

b. The second sheet shall be a table of contents.

c. The third sheet shall be filled out by the Contractor and shall list project addresses, see Appendix A Figure 3.

d. The fourth sheet shall also be filled out by the Contractor and list project information for project, see Appendix A Figure 4.

e. Provide Wilson Jones, reinforced, clear, ring binder indexes, 5 tab No. WJ-54125 or approved equal with the appropriate specification section number, and typed index for each section.

f. Shop Drawings: Shop drawings shall be a copy of the final and approved shop drawings submitted as required in Item L-106-2, Shop Drawings and Samples. These shall be inserted in the binder in proper order. Each catalog sheet shall clearly identify where the product is used and the drawing identification for equipment. Clear vinyl pockets shall be provided for insertion of shop drawings.

g. Product data and/or catalog sheets shall be a copy of the final and approved submittal submitted as required in Item L-106-2, Shop Drawings and Samples. These shall be inserted in the binder proper order. Each catalog sheet shall clearly identify where the product is used and the drawing identification for equipment.

h. Warranty/Guarantee: Provide a copy of the warranty/guarantee and letters of certification, in respective locations in the O & M Manual binder. Original warranty/guarantee is to be incorporated into a separate project warranty book with warranty/guarantees provided for other sections and divisions of the specifications and submitted for Engineer approval.

i. Performance Verification and Demonstration to Owner (See Appendix A Figure 2 form in L-131, Demonstrations, Tests and Performance Verification).

j. Tabulated Data (as required in L-131, Demonstrations, Tests and Performance Verification).

k. Required Check-Out Memos (see Appendix A Figure 1 form in L-131, Demonstrations, Tests and Performance Verification).

l. Progress and Record Drawing Certification (Appendix A Figure 5)

m. Ground Test Information (See Appendix A Figure 3 form in L-131, Demonstrations, Tests and Performance Verification).

106-4.4 PROCESSING O & M MANUALS. Submit four (4) sets of O & M Manuals. The Contractor shall review the manuals before submitting them to the Engineer.

106-4.5 DELAYS. The Contractor is responsible for delays in project time accruing directly or indirectly from late submissions or resubmissions of the Operation and Maintenance Manuals.

106-4.6 RE-SUBMITTALS. The Engineer shall be reimbursed the cost to review Operation and Maintenance Manuals, re-submittals subsequent to the second submittal.

METHOD OF MEASUREMENT

106-5.1 The items described in this section are incidental to other sections and not shall be measured for payment.

BASIS OF PAYMENT

106-6.1 No direct payment shall be made for the work described in this section. The work described in this section is incidental to other items and shall be paid for in the respective bid item of which it is a component part.

END OF ITEM L-106

"EXAMPLE"

NAME OF CITY
CITY, STATE

_____
_____
AIRPORT

NAME OF PROJECT

AIRFIELD LIGHTING SUBMITTAL BOOK

APPENDIX A - FIGURE 1

"EXAMPLE"

NAME OF
CITY, STATE

NAME OF PROJECT
AT
NAME OF AIRPORT

AIRFIELD
LIGHTING
SUBMITTAL
BOOK

APPENDIX A - FIGURE 2

PROJECT ADDRESSES

OWNER: PHONES:

Name of Airport Tel. (___)
___-____
Address
City, State Zip Code

CONSULTING ENGINEERS:

The Ohmega Group, LLC Tel. (803) 883-0483
1509 Lady Street, Suite K
Columbia, SC 29201

GENERAL CONTRACTOR:

SUBCONTRACTORS:

SUPPLIERS:

APPENDIX A - FIGURE 3

PROJECT INFORMATION

Contractor shall fill in the blanks below and insert in the Submittal Books and the Operating and Maintenance Manuals. Submit one (1) sheet for each major division of Work.

Project Name: _____

Specification Division Number & Name: _____

Subcontractor: _____

Contact: _____ Phone Number: _____

Date Project Bid: _____

Project Start Date: _____

Days Allowed for Construction: _____

Target Completion: _____

Substantial Completion _____

Certification Date: _____

	DATE SUBMITTED	DATE SUBMITTED
Closeout Documentation Manual:		
Operating & Maintenance Manual:		
Owner Performance Verification and Demonstrations:		
Manufacturer's Performance Verification Memos:		
Manufacturer's Test Data:		
Record Documents:		

APPENDIX A FIGURE 4

PROGRESS AND RECORD DRAWING CERTIFICATION

This form shall be completed and submitted with the Record Documents. Submit one form for each Contractor/Subcontractor providing as-built information. Include a copy of this form in the Closeout Documentation Manual.

Project Name:_____

Specification Division Number & Name:_____

The Contractor's and Subcontractor's signatures below certify that the attached drawings and specifications were marked and revised as items were installed/changed, during the course of construction, and that these documents represent an accurate "Record-As Built" condition of the work as actually installed.

_____

(Name of General Contractor)

_____

(Signature, Title, Date)

_____

(Name of Subcontractor)

_____

(Signature, Title, Date)

APPENDIX A - FIGURE 5

"EXAMPLE"

NAME OF CITY
CITY, STATE

_____
_____
AIRPORT

NAME OF PROJECT

AIRFIELD LIGHTING OPERATION AND MAINTENANCE MANUALS

APPENDIX A - FIGURE 6

"EXAMPLE"

NAME OF CITY
CITY, STATE

NAME OF PROJECT

OPERATION
AND
MAINTENANCE
MANUAL

END OF ITEM L-106

Item L-108 Underground Power Cable for Airports

DESCRIPTION

108-1.1 This item shall consist of furnishing and installing power cables that are direct buried and furnishing and/or installing power cables within conduit or duct banks per these specifications at the locations shown on the plans. It includes excavation and backfill of trench for direct-buried cables only. Also included are the installation of counterpoise wires, ground wires, ground rods and connections, cable splicing, cable marking, cable testing, and all incidentals necessary to place the cable in operating condition as a completed unit to the satisfaction of the Engineer. This item shall not include the installation of duct banks or conduit, trenching and backfilling for duct banks or conduit, or furnishing or installation of cable for FAA owned/operated facilities. Requirements and payment for trenching and backfilling for the installation of underground conduit and duct banks is in Item L-110, Airport Underground Electrical Duct Banks and Conduits.

EQUIPMENT AND MATERIALS

108-2.1 General

a. Airport lighting equipment and materials covered by advisory circulars (AC) shall be approved under the Airport Lighting Equipment Certification Program per AC 150/5345-53, current version.

b. All other equipment and materials covered by other referenced specifications shall be subject to acceptance through manufacturer's certification of compliance with the applicable specification when requested by the Engineer.

c. Manufacturer's certifications shall not relieve the Contractor of the responsibility to provide materials per these specifications. Materials supplied and/or installed that do not comply with these specifications shall be removed (when directed by the Engineer) and replaced with materials that comply with these specifications, at the Contractor's cost.

d. All materials and equipment used to construct this item shall be submitted to the Engineer for approval prior to ordering the equipment. Submittals consisting of marked catalog sheets or shop drawings shall be provided. Submittal data shall be presented in a clear, precise and thorough manner. Original catalog sheets are preferred. Photocopies are acceptable provided they are as good a quality as the original. Clearly and boldly mark each copy to identify products or models applicable to this project. Indicate all optional equipment and delete any non-pertinent data. Submittals for components of electrical equipment and systems shall identify the equipment to which they apply on each submittal sheet. Markings shall be made bold and clear with arrows or circles (highlighting is not acceptable). Contractor is solely responsible for delays in the project that may accrue directly or indirectly from late submissions or resubmissions of submittals.

e. The data submitted shall be sufficient, in the opinion of the Engineer, to determine compliance with the plans and specifications. The Engineer reserves the right to reject any and all equipment, materials or procedures, that do not meet the system design and the standards and codes, specified in this document.

f. All equipment and materials furnished and installed under this section shall be guaranteed against defects in materials and workmanship for at least **twelve (12) months** from the date of final acceptance by the Owner. The defective materials and/or equipment shall be repaired or replaced, at the Owner's discretion, with no additional cost to the Owner. The Contractor shall be responsible to maintain a minimum insulation resistance per AC 150/5340-26B, Maintenance Airport Visual Aid Facilities, Table 5-1 and paragraph 5.1.3.1, with isolation transformers connected in new circuits and new segments of existing circuits through the end of the contract warranty period.

108-2.2 Cable. Underground cable for airfield lighting facilities (runway and taxiway lights and signs) shall conform to the requirements of AC 150/5345-7, Specification for L-824 Underground Electrical Cable for Airport Lighting Circuits latest edition. Conductors for use on 6.6 ampere primary airfield lighting series circuits shall be single conductor, seven strand, #8 American wire gauge (AWG), L-824 **Type C**, 5,000 volts, non-shielded, with **cross-linked polyethylene insulation**. Conductors for use on 20 ampere primary airfield lighting series circuits shall be single conductor, seven strand, #6 AWG, L-824, **Type C**, 5,000 volts, non-shielded, with **cross-linked polyethylene insulation**. L-824 conductors for use on the L-830 secondary of airfield lighting series circuits shall be sized in accordance with the manufacturer's recommendations. All other conductors shall comply with FAA and National Electric Code (NEC) requirements. Conductor sizes noted above shall not apply to leads furnished by manufacturers on airfield lighting transformers and fixtures.

Wire for electrical circuits up to 600 volts shall comply with Specification L-824 and/or Federal Specification J-C-30 and shall be type THWN-2, 75°C. Conductors for parallel (voltage) circuits shall be sized and installed in accordance with NFPA-70, National Electrical Code.

Unless noted otherwise, all 600-volt and less non-airfield lighting conductor sizes are based on a 75°C, THWN-2, 600 volt insulation, copper conductors, not more than three single insulated conductors, in raceway, in free air. The conduit/duct sizes are based on the use of THWN-2, 600 volt insulated conductors. The Contractor shall make the necessary increase in conduit/duct sizes for other types of wire insulation. In no case shall the conduit/duct size be reduced. The minimum power circuit wire size shall be #12 AWG.

Conductor sizes may have been adjusted due to voltage drop or other engineering considerations. Equipment provided by the Contractor shall be capable of accepting the quantity and sizes of conductors shown in the Contract Documents. All conductors, pigtails, cable step-down adapters, cable step-up adapters, terminal blocks and splicing materials necessary to complete the cable termination/splice shall be considered incidental to the respective pay items provided.

Cable type, size, number of conductors, strand and service voltage shall be as specified in the Contract Document.

108-2.3 Bare copper wire (counterpoise, bare copper wire ground and ground rods). Wire for counterpoise or ground installations for airfield lighting systems shall be No. 6 AWG bare solid copper wire for counterpoise and/or No. 6 AWG insulated stranded for ground wire per ASTM B3 and ASTM B8, and shall be **bare copper** per ASTM B33. See AC 150/5340-30 for additional details about counterpoise and ground wire types and installation. For voltage powered circuits, the equipment ground conductor shall be minimum No. 6 AWG, 600V rated, Type XHHW insulated, green color, stranded copper equipment ground conductor.

Ground rods shall be **copper-clad steel**. The ground rods shall be of the length and diameter specified on the plans, but in no case be less than **10 feet (2.54 m) long and 3/4 inch (19 mm) in diameter**.

108-2.4 Cable connections. In-line connections or splices of underground primary cables shall be of the type called for on the plans, and shall be one of the types listed below. No separate payment will be made for cable connections.

a. The cast splice. A cast splice, employing a plastic mold and using epoxy resin equivalent to that manufactured by 3MTM Company, "Scotchcast" Kit No. 82-B, or as manufactured by Hysol® Corporation, "Hyseal Epoxy Splice" Kit No. E1135, or an approved equivalent, used for potting the splice is acceptable.

b. The field-attached plug-in splice. Figure 3 of AC 150/5345-26, Specification for L-823 Plug and Receptacle, Cable Connectors, employing connector kits, is acceptable for field attachment to single conductor cable. It shall be the Contractor's responsibility to determine the outside diameter of the cable to be spliced and to furnish appropriately sized connector kits and/or adapters and heat shrink tubing with integral sealant.

c. The factory-molded plug-in splice. Specification for L-823 Connectors, Factory-Molded to Individual Conductors, is acceptable.

d. The taped or heat-shrink splice. Taped splices employing field-applied rubber, or synthetic rubber tape covered with plastic tape is acceptable. The rubber tape should meet the requirements of ASTM D4388 and the plastic tape should comply with Military Specification MIL-I-24391 or Commercial Item Description A-A-55809. Heat shrinkable tubing shall be heavy-wall, self-sealing tubing rated for the voltage of the wire being spliced and suitable for direct-buried installations. The tubing shall be factory coated with a thermoplastic adhesive-sealant that will adhere to the insulation of the wire being spliced forming a moisture- and dirt-proof seal. Additionally, heat shrinkable tubing for multi-conductor cables, shielded cables, and armored cables shall be factory kits that are designed for the application. Heat shrinkable tubing and tubing kits shall be manufactured by Tyco Electronics/ Raychem Corporation, Energy Division, or approved equivalent.

In all the above cases, connections of cable conductors shall be made using crimp connectors using a crimping tool designed to make a complete crimp before the tool can be removed. All L-823/L-824 splices and terminations shall be made per the manufacturer's recommendations and listings.

All connections of counterpoise, grounding conductors and ground rods shall be made by the exothermic process or approved equivalent, except that a light base ground clamp connector shall be used for attachment to the light base. See AC 150/5340-30 for additional information about methods of attaching a ground to a galvanized light base. All exothermic connections shall be made per the manufacturer's recommendations and listings.

108-2.5 Splicer qualifications. Every airfield lighting cable splicer shall be qualified in making airport cable splices and terminations on cables rated at or above 5,000 volts AC. The Contractor shall submit to the Engineer proof of the qualifications of each proposed cable splicer for the airport cable type and voltage level to be worked on. Cable splicing/terminating personnel shall have a minimum of three (3) years continuous experience in terminating/splicing medium voltage cable.

108-2.6 Concrete. Concrete for cable markers shall be per Specification Item P-610, Structural Portland Cement Concrete.

108-2.7 Flowable backfill. Flowable material used to backfill trenches for power cable trenches shall conform to the requirements of Item P-153, Controlled Low Strength Material.

108-2.8 Cable identification tags. Cable identification tags shall be made from a non-corrosive material with the circuit identification stamped or etched onto the tag. The tags shall be of the type as detailed on the plans.

108-2.9 Tape. Electrical tapes shall be Scotch™ Electrical Tapes –Scotch™ 88 (1-1/2 inch (38 mm) wide) and Scotch™ 130C® linerless rubber splicing tape (2-inch (50 mm) wide), as manufactured by the Minnesota Mining and Manufacturing Company (3M™), or an approved equivalent.

108-2.10 Electrical coating. Electrical coating shall be Scotchkote™ as manufactured by 3MTM, or an approved equivalent.

108-2.11 Existing circuits. Whenever the scope of work requires connection to an existing circuit, the circuit's insulation resistance shall be tested, in the presence of the Engineer. The test shall be performed per this item and prior to any activity that will affect the respective circuit. The Contractor shall record the results on forms acceptable to the Engineer. When the work affecting the circuit is complete, the circuit's insulation resistance shall be checked again, in the presence of the Engineer. The Contractor shall record the results on forms acceptable to the Engineer. The second reading shall be equal to or greater than the first reading or the Contractor shall make the necessary repairs to the circuit to bring the second reading above the first reading. All repair costs including a complete replacement of the L-823 connectors, L-830 transformers and L-824 cable, if necessary, shall be borne by the Contractor. All test results shall be submitted in the Operation and Maintenance (O&M) Manual.

108-2.12 Detectable warning tape. Plastic, detectable, American Public Works Association (APWA) Red (electrical power lines, cables, conduit and lighting cable) with continuous legend magnetic tape shall be polyethylene film with a metalized foil core and shall be 3-6 inches (75-150 mm) wide. Detectable tape is incidental to the respective bid item.

CONSTRUCTION METHODS

108-3.1 General. The Contractor shall install the specified cable at the approximate locations indicated on the plans. Unless otherwise shown on the plans, all cable required to cross under pavements expected to carry aircraft loads shall be installed in concrete encased duct banks. Wherever possible, cable shall be run without splices, from connection to connection.

Cable connections between lights will be permitted only at the light locations for connecting the underground cable to the primary leads of the individual isolation transformers. The Contractor shall be responsible for providing cable in continuous lengths for home runs or other long cable runs without connections unless otherwise authorized in writing by the Engineer or shown on the plans.

In addition to connectors being installed at individual isolation transformers, L-823 cable connectors for maintenance and test points shall be installed at locations shown on the plans. Cable circuit identification

markers shall be installed on both sides of the L-823 connectors installed or at least once in each access point where L-823 connectors are not installed.

Provide not less than 3 feet (1 m) of cable slack on each side of all connections, isolation transformers, light units, and at points where cable is connected to field equipment. Where provisions must be made for testing or for future above grade connections, provide enough slack to allow the cable to be extended at least one foot (30 cm) vertically above the top of the access structure. This requirement also applies where primary cable passes through empty light bases, junction boxes, and access structures to allow for future connections, or as designated by the Engineer.

Primary airfield lighting cables installed shall have cable circuit identification markers attached on both sides of each L-823 connector and on each airport lighting cable entering or leaving cable access points, such as manholes, hand holes, pull boxes, junction boxes, etc. Markers shall be of sufficient length for imprinting the cable circuit identification legend on one line, using letters not less than 1/4 inch (6 mm) in size. The cable circuit identification shall match the circuits noted on the construction plans.

108-3.2 Installation in duct banks or conduits. This item includes the installation of the cable in duct banks or conduit per the following paragraphs. The maximum number and voltage ratings of cables installed in each single duct or conduit, and the current-carrying capacity of each cable shall be per the latest version of the National Electric Code, or the code of the local agency or authority having jurisdiction.

The Contractor shall make no connections or splices of any kind in cables installed in conduits or duct banks.

Unless otherwise designated in the plans, where ducts are in tiers, use the lowest ducts to receive the cable first, with spare ducts left in the upper levels. Check duct routes prior to construction to obtain assurance that the shortest routes are selected and that any potential interference is avoided.

Duct banks or conduits shall be installed as a separate item per Item L-110, Airport Underground Electrical Duct Banks and Conduit. The Contractor shall run a mandrel through duct banks or conduit prior to installation of cable to ensure that the duct bank or conduit is open, continuous and clear of debris. The mandrel size shall be compatible with the conduit size. The Contractor shall swab out all conduits/ducts and clean light bases, manholes, etc., interiors immediately prior to pulling cable. Once cleaned and swabbed, the light bases and all accessible points of entry to the duct/conduit system shall be kept closed except when installing cables. Cleaning of ducts, light bases, manholes, etc., is incidental to the pay item of the item being cleaned. All raceway systems left open, after initial cleaning, for any reason shall be re-cleaned at the Contractor's expense. The Contractor shall verify existing ducts proposed for use in this project as clear and open. The Contractor shall notify the Engineer of any blockage in the existing ducts.

The cable shall be installed in a manner that prevents harmful stretching of the conductor, damage to the insulation, or damage to the outer protective covering. The ends of all cables shall be sealed with moisture-seal tape providing moisture-tight mechanical protection with minimum bulk, or alternately, heat shrinkable tubing before pulling into the conduit and it shall be left sealed until connections are made. Where more than one cable is to be installed in a conduit, all cable shall be pulled in the conduit at the same time. The pulling of a cable through duct banks or conduits may be accomplished by hand winch or power winch with the use of cable grips or pulling eyes. Maximum pulling tensions shall not exceed the cable manufacturer's

recommendations. A non-hardening cable-pulling lubricant recommended for the type of cable being installed shall be used where required.

The Contractor shall submit the recommended pulling tension values to the Engineer prior to any cable installation. If required by the Engineer, pulling tension values for cable pulls shall be monitored by a dynamometer in the presence of the Engineer. Cable pull tensions shall be recorded by the Contractor and reviewed by the Engineer. Cables exceeding the maximum allowable pulling tension values shall be removed and replaced by the Contractor at the Contractor's expense.

The manufacturer's minimum bend radius or NEC requirements (whichever is more restrictive) shall apply. Cable installation, handling and storage shall be per manufacturer's recommendations. During cold weather, particular attention shall be paid to the manufacturer's minimum installation temperature. Cable shall not be installed when the temperature is at or below the manufacturer's minimum installation temperature. At the Contractor's option, the Contractor may submit a plan, for review by the Engineer, for heated storage of the cable and maintenance of an acceptable cable temperature during installation when temperatures are below the manufacturer's minimum cable installation temperature.

Cable shall not be dragged across base can or manhole edges, pavement or earth. When cable must be coiled, lay cable out on a canvas tarp or use other appropriate means to prevent abrasion to the cable jacket.

108-3.3 Installation of direct-buried cable in trenches. Unless otherwise specified, the Contractor shall not use a cable plow for installing the cable. Cable shall be unreeled uniformly in place alongside or in the trench and shall be carefully placed along the bottom of the trench. The cable shall not be unreeled and pulled into the trench from one end. Slack cable sufficient to provide strain relief shall be placed in the trench in a series of S curves. Sharp bends or kinks in the cable shall not be permitted.
Where cables must cross over each other, a minimum of 3 inches (75 mm) vertical displacement shall be provided with the topmost cable depth at or below the minimum required depth below finished grade.

a. Trenching. Where turf is well established and the sod can be removed, it shall be carefully stripped and properly stored. Trenches for cables may be excavated manually or with mechanical trenching equipment. Walls of trenches shall be essentially vertical so that a minimum of surface is disturbed. Graders shall not be used to excavate the trench with their blades. The bottom surface of trenches shall be essentially smooth and free from coarse aggregate. Unless otherwise specified, cable trenches shall be excavated to a minimum depth of 18 inches (0.5 m) below finished grade per NEC Table 300.5, except as follows:

(1) When off the airport or crossing under a roadway or driveway, the minimum depth shall be 36 inches (91 cm) unless otherwise specified.

(2) Minimum cable depth when crossing under a railroad track, shall be 42 inches (1 m) unless otherwise specified.

Dewatering necessary for cable installation, erosion and turbidity control, per Federal, state, and local requirements is incidental to its respective pay items as part of Item L-108. The cost of all excavation regardless of type of material encountered, shall be included in the unit price bid for the L-108 Item.

The Contractor shall excavate all cable trenches to a width not less than 6 inches (150 mm). Unless otherwise specified on the plans, all cables in the same location and running in the same general direction shall be installed in the same trench.

When rock is encountered, the rock shall be removed to a depth of at least 3 inches (75 mm) below the required cable depth and it shall be replaced with bedding material of earth or sand containing no mineral aggregate particles that would be retained on a 1/4 inch (6 mm) sieve. Flowable backfill material may alternatively be used. The Contractor shall ascertain the type of soil or rock to be excavated before bidding. All such rock removal shall be performed and paid for under Item P-152.

Duct bank or conduit markers temporarily removed for trench excavations shall be replaced as required.

It is the Contractor's responsibility to locate existing utilities within the work area prior to excavation. Where existing active cables cross proposed installations, the Contractor shall ensure that these cables are adequately protected. Where crossings are unavoidable, no splices will be allowed in the existing cables, except as specified on the plans. Installation of new cable where such crossings must occur shall proceed as follows:

(1) Existing cables shall be located manually. Unearthed cables shall be inspected to assure absolutely no damage has occurred.

(2) Trenching, etc., in cable areas shall then proceed, with approval of the Engineer, with care taken to minimize possible damage or disruption of existing cable, including careful backfilling in area of cable.

In the event that any previously identified cable is damaged during the course of construction, the Contractor shall be responsible for the complete repair or replacement.

b. Backfilling. After the cable has been installed, the trench shall be backfilled. The first layer of backfill in the trench shall be 3 inches (75 mm) deep, loose measurement, and shall be either earth or sand containing no mineral aggregate particles that would be retained on a 1/4 inch (6 mm) sieve. This layer shall not be compacted. The second layer shall be 5 inches (125 mm) deep, loose measurement, and shall contain no particles that would be retained on a one inch (25 mm) sieve. The remaining third and subsequent layers of backfill shall not exceed 8 inches (20 cm) of loose measurement and be excavated or imported material and shall not contain stone or aggregate larger than 4 inches (100 mm) maximum diameter.

The second and subsequent layers shall be thoroughly tamped and compacted to at least the density of the adjacent undisturbed soil, and to the satisfaction of the Engineer. If necessary to obtain the desired compaction, the backfill material shall be moistened or aerated as required.

If the cable is to be installed in locations or areas where other compaction requirements are specified (under pavements, embankments, etc.) the compaction requirements per Item P-152 for that area shall be followed.

Trenches shall not contain pools of water during backfilling operations. The trench shall be completely backfilled and tamped level with the adjacent surface, except that when turf is to be established over the trench, the backfilling shall be stopped at an appropriate depth consistent with the type of turfing operation to be accommodated. A proper allowance for settlement shall also be provided. Any excess excavated material shall be removed and disposed of per the plans and specifications.

Underground electrical warning (caution) tape shall be installed in the trench above all direct-buried cable. Contractor shall submit a sample of the proposed warning tape for acceptance by the Engineer. If not shown on the plans, the warning tape shall be located 6 inches (150 mm) above the direct-buried cable or the

counterpoise wire if present. A 4-6 inch (100 - 150 mm) wide polyethylene film detectable tape, with a metalized foil core, shall be installed above all direct buried cable or counterpoise. The tape shall be of the color and have a continuous legend as indicated on the plans. The tape shall be installed 8 inch (200 mm) minimum below finished grade.

c. Restoration. Following restoration of all trenching near airport movement surfaces, the Contractor shall visually inspect the area for foreign object debris (FOD) and remove any that is found. Where soil and sod has been removed, it shall be replaced as soon as possible after the backfilling is completed. All areas disturbed by work shall be restored to its original condition. The restoration shall include the **seeding and mulching** as shown on the plans. The Contractor shall be held responsible for maintaining all disturbed surfaces and replacements until final acceptance. When trenching is through paved areas, restoration shall be equal to existing conditions and compaction shall meet the requirements of Item P-152. Restoration shall be considered incidental to the pay item of which it is a component part.

108-3.4 Cable markers for direct-buried cable. The location of direct buried circuits shall be marked by a concrete slab marker, 2 feet (60 cm) square and 4-6 inch (10 - 15 cm) thick, extending approximately one inch (25 mm) above the surface. Each cable run from a line of lights and signs to the equipment vault shall be marked at approximately every 200 feet (61 m) along the cable run, with an additional marker at each change of direction of cable run. All other direct-buried cable shall be marked in the same manner. Cable markers shall be installed directly above the cable. The Contractor shall impress the word "CABLE" and directional arrows on each cable marking slab. The letters shall be approximately 4 inches (100 mm) high and 3 inches (75 mm) wide, with width of stroke 1/2 inch (12 mm) and 1/4 inch (6 mm) deep.

At the location of each underground cable connection, except at lighting units, or isolation transformers, or power a concrete marker slab must mark adapters placed above the connection. The Contractor shall impress the word "SPLICE" on each slab. The Contractor also shall impress additional circuit identification symbols on each slab as directed by the Engineer. All cable markers and splice markers shall be painted international orange. Paint shall be specifically manufactured for uncured exterior concrete. After placement, all cable or splice markers shall be given one coat of high-visibility aviation orange paint as approved by the Engineer. Furnishing and installation of cable markers is incidental to the respective cable pay item.

108-3.5 Splicing. Connections of the type shown on the plans shall be made by experienced personnel regularly engaged in this type of work and shall be made as follows:

a. Cast splices. These shall be made by using crimp connectors for jointing conductors. Molds shall be assembled, and the compound shall be mixed and poured per the manufacturer's instructions and to the satisfaction of the Engineer.

b. Field-attached plug-in splices. These shall be assembled per the manufacturer's instructions. These splices shall be made by plugging directly into mating connectors. In all cases the joint where the connectors come together shall be wrapped with at least one layer of rubber or synthetic rubber tape and one layer of plastic tape, one-half lapped, extending at least 1-1/2 inches (38 mm) on each side of the joint.

c. Factory-molded plug-in splices. These shall be made by plugging directly into mating connectors. In all cases, the joint where the connectors come together shall be wrapped with at least one layer of rubber or synthetic rubber tape and one layer of plastic tape, one-half lapped, extending at least 1-1/2 inches (38 mm) on each side of the joint.

d. Taped or heat-shrink splices. A taped splice shall be made in the following manner:

Bring the cables to their final position and cut so that the conductors will butt. Remove insulation and jacket allowing for bare conductor of proper length to fit compression sleeve connector with 1/4 inch (6 mm) of bare conductor on each side of the connector. Prior to splicing, the two ends of the cable insulation shall be penciled using a tool designed specifically for this purpose and for cable size and type. Do not use emery paper on splicing operation since it contains metallic particles. The copper conductors shall be thoroughly cleaned. Join the conductors by inserting them equidistant into the compression connection sleeve. Crimp conductors firmly in place with crimping tool that requires a complete crimp before tool can be removed. Test the crimped connection by pulling on the cable. Scrape the insulation to assure that the entire surface over which the tape will be applied (plus 3 inches (75 mm) on each end) is clean. After scraping wipe the entire area with a clean lint-free cloth. Do not use solvents.

Apply high-voltage rubber tape one-half lapped over bare conductor. This tape should be tensioned as recommended by the manufacturer. Voids in the connector area may be eliminated by highly elongating the tape, stretching it just short of its breaking point. Throughout the rest of the splice less tension should be used. Always attempt to exactly half-lap to produce a uniform buildup. Continue buildup to 1-1/2 times cable diameter over the body of the splice with ends tapered a distance of approximately one inch (25 mm) over the original jacket. Cover rubber tape with two layers of vinyl pressure-sensitive tape one-half lapped. Do not use glyptol or lacquer over vinyl tape as they react as solvents to the tape. No further cable covering or splice boxes are required.

Heat shrinkable tubing shall be installed following manufacturer's instructions. Direct flame heating shall not be permitted unless recommended by the manufacturer. Cable surfaces within the limits of the heat-shrink application shall be clean and free of contaminates prior to application.

Surfaces of equipment or conductors being terminated or connected shall be prepared in accordance with industry standard practice and manufacturer's recommendations. All surfaces to be connected shall be thoroughly cleaned to remove all dirt, grease, oxides, nonconductive films, or other foreign material. Paints and other nonconductive coatings shall be removed to expose base metal. Clean all surfaces at least 1/4 inch (6.4 mm) beyond all sides of the larger bonded area on all mating surfaces. Use a joint compound suitable for the materials used in the connection. Repair painted/coated surface to original condition after completing the connection.

108-3.6 Bare counterpoise wire installation for lightning protection and grounding. If shown on the plans or included in the job specifications, bare solid **#2 AWG** copper counterpoise wire shall be installed for lightning protection of the underground cables. The Engineer shall select one of two methods of lightning protection for the airfield lighting circuit based on the frequency of local lightning:

a. Equipotential. – may be used by the Engineer for areas that have high rates of lightning strikes. This is where the counterpoise is bonded to the light base (edge lights included) and counterpoise size is determined by the Engineer.

Counterpoise wire shall be installed in the same trench for the entire length of buried cable, conduits and duct banks that are installed to contain airfield cables.

For edge light fixtures installed in turf (stabilized soils) and for raceways or cables adjacent to the full strength pavement edge, the counterpoise conductor shall be installed halfway between the pavement edge and the light base, mounting stake, raceway, or cable.

The counterpoise conductor shall be installed 8 inches (203 mm) minimum below grade.

Each light base or mounting stake shall be provided with a grounding electrode.

When a metallic light base is used, the grounding electrode shall be bonded to the metallic light base or mounting stake with a No. 6 AWG bare, annealed or soft drawn, solid copper conductor.

When a nonmetallic light base is used, the grounding electrode shall be bonded to the metallic light fixture or metallic base plate with a No. 6 AWG bare, annealed or soft drawn, solid copper conductor.

The counterpoise wire shall also be exothermically welded to ground rods installed as shown on the plans but not more than 500 feet (150 m) apart around the entire circuit. The counterpoise system shall be continuous and terminate at the transformer vault or at the power source. It shall be securely attached to the vault or equipment external ground ring or other made electrode-grounding system. The connections shall be made as shown on the plans and in the specifications.

If shown on the plans or in the specifications, a separate equipment (safety) ground system shall be provided in addition to the counterpoise wire using one of the following methods:

c. A ground rod installed at and securely attached to each light fixture base, mounting stake, and to all metal surfaces at junction/access structures via #6 AWG wire.

d. For parallel voltage systems only, install a #6 AWG green insulated equipment ground conductor internal to the conduit system and securely attached it to each light fixture base internal grounding lug and to all metal surfaces at junction/access structures. Dedicated ground rods shall be installed and exothermically welded to the counterpoise wires at each end of a duct bank crossing under pavement.

Where an existing airfield lighting system is being extended or modified, the new counterpoise conductors shall be interconnected to existing counterpoise conductors at each intersection of the new and existing airfield lighting counterpoise systems.

108-3.7 Counterpoise installation above multiple conduits and duct banks. Counterpoise wires shall be installed above multiple conduits/duct banks for airfield lighting cables, with the intent being to provide a complete area of protection over the airfield lighting cables. When multiple conduits and/or duct banks for airfield cable are installed in the same trench, the number and location of counterpoise wires above the conduits shall be adequate to provide a complete cone of protection measured 22-1/2 degrees each side of vertical.

Where duct banks pass under pavement to be constructed in the project, the counterpoise shall be placed above the duct bank. Reference details on the construction plans.

108-3.8 Counterpoise installation at existing duct banks. When airfield lighting cables are indicated on the plans to be routed through existing duct banks, the new counterpoise wiring shall be terminated at

ground rods at each end of the existing duct bank where the cables being protected enter and exit the duct bank. The new counterpoise conductor shall be bonded to the existing counterpoise system.

108-3.9 Exothermic bonding. Bonding of counterpoise wire shall be by the exothermic welding process. Only personnel experienced in and regularly engaged in this type of work shall make these connections.

Contractor shall demonstrate to the satisfaction of the Engineer, the welding kits, materials and procedures to be used for welded connections prior to any installations in the field. The installations shall comply with the manufacturer's recommendations and the following:

a. All slag shall be removed from welds.

b. Using an exothermic weld to bond the counterpoise to a lug on a galvanized light base is not recommended unless the base has been specially modified. Consult the manufacturer's installation directions for proper methods of bonding copper wire to the light base. See also AC 150/5340-30 for galvanized light base exception.

c. If called for in the plans, all buried copper and weld material at weld connections shall be thoroughly coated with 6 mm of 3M™ Scotchkote™, or approved equivalent, or coated with coal tar Bitumastic® material to prevent surface exposure to corrosive soil or moisture.

108-3.10 Testing. The Contractor shall furnish all necessary equipment and appliances for testing the airport electrical systems and underground cable circuits before and after installation. The Contractor shall perform all tests in the presence of the Engineer. The Contractor shall demonstrate the electrical characteristics to the satisfaction of the Engineer. All costs for testing are incidental to the respective item being tested. For phased projects, the tests must be completed by phase. The Contractor must maintain the test results throughout the entire project as well as during the warranty period that meet the following:

a. Earth resistance testing methods shall be submitted to the Engineer for approval. Earth resistance testing results shall be recorded on an approved form and testing shall be performed in the presence of the Engineer. All such testing shall be at the sole expense of the Contractor.

b. Should the counterpoise or ground grid conductors be damaged or suspected of being damaged by construction activities the Contractor shall test the conductors for continuity with a low resistance ohmmeter. The conductors shall be isolated such that no parallel path exists and tested for continuity. The Engineer shall approve of the test method selected. All such testing shall be at the sole expense of the Contractor.

After installation, the Contractor shall test and demonstrate to the satisfaction of the Engineer the following:

c. That all affected lighting power and control circuits (existing and new) are continuous and free from short circuits.

d. That all affected circuits (existing and new) are free from unspecified grounds.

e. That the insulation resistance to ground of all new non-grounded high voltage series circuits or cable segments is not less than **50 megohms**.

f. That the insulation resistance to ground of all new non-grounded conductors of new multiple circuits or circuit segments is not less than 100 megohms.

g. That all affected circuits (existing and new) are properly connected per applicable wiring diagrams.

h. That all affected circuits (existing and new) are operable. Tests shall be conducted that include operating each control not less than 10 times and the continuous operation of each lighting and power circuit for not less than 1/2 hour.

i. That the impedance to ground of each ground rod does not exceed 25 ohms prior to establishing connections to other ground electrodes. The fall-of-potential ground impedance test shall be used, as described by American National Standards Institute/Institute of Electrical and Electronic Engineers (ANSI/IEEE) Standard 81, to verify this requirement. As an alternate, clamp-on style ground impedance test meters may be used to satisfy the impedance testing requirement. Test equipment and its calibration sheets shall be submitted for review and approval by the Engineer prior to performing the testing.

Two copies of tabulated results of all cable tests performed shall be supplied by the Contractor to the Engineer. Where connecting new cable to existing cable, ground resistance tests shall be performed on the new cable prior to connection to the existing circuit.

There are no approved "repair" procedures for items that have failed testing other than complete replacement.

METHOD OF MEASUREMENT

108-4.1 The cost of all excavation, backfill, dewatering and restoration regardless of the type of material encountered shall be included in the unit price bid for the work.

108-4.2 Cable or counterpoise wire installed in trench, duct bank or conduit shall be measured by the number of linear feet (meters) installed and grounding connectors, and trench marking tape ready for operation, and accepted as satisfactory. Separate measurement shall be made for each cable or counterpoise wire installed in trench, duct bank or conduit. The measurement for this item **shall not** include additional quantities required for slack.

108-4.3 Ground rods shall not be separately measured. They shall be incidental to the counterpoise pay item, or other associated equipment pay item.

BASIS OF PAYMENT

108-5.1 Payment will be made at the contract unit price for trenching, cable and bare counterpoise wire installed in trench (direct-buried), or cable and equipment ground installed in duct bank or conduit, in place by the Contractor and accepted by the Engineer. This price shall be full compensation for furnishing all materials and for all preparation and installation of these materials, and for all labor, equipment, tools, and

incidentals, including ground rods and ground connectors and trench marking tape, necessary to complete this item.

Payment will be made under:

Item L-108-5.1	**No. 8 AWG, 5 kV, L-824, Type C Cable,** Installed in Trench, Duct Bank or Conduit - per liner foot (meter)
Item L-108-5.2	**No. 2 AWG**, Solid, Bare Counterpoise Wire, Installed in Trench, Above the Duct Bank or Conduit, Including Ground Rods and Ground Connectors - per linear foot (meter)

MATERIAL REQUIREMENTS

AC 150/5340-26	Maintenance of Airport Visual Aid Facilities
AC 150/5340-30	Design and Installation Details for Airport Visual Aids
AC 150/5345-7	Specification for L-824 Underground Electrical Cable for Airport Lighting Circuits
AC 150/5345-26	Specification for L-823 Plug and Receptacle, Cable Connectors
AC 150/5345-53	Airport Lighting Equipment Certification Program
Commercial Item Description A-A-59544	
	Cable and Wire, Electrical (Power, Fixed Installation)
Commercial Item Description A-A-55809	
	Insulation Tape, Electrical, Pressure-Sensitive Adhesive, Plastic
ASTM B3	Standard Specification for Soft or Annealed Copper Wire
ASTM B8	Standard Specification for Concentric-Lay-Stranded Copper Conductors, Hard, Medium-Hard, or Soft
ASTM B33	Standard Specification for Tin-Coated Soft or Annealed Copper Wire for Electrical Purposes
ASTM D4388	Standard Specification for Nonmetallic Semi-Conducting and Electrically Insulating Rubber Tapes
FED SPEC J-C-30	Cable and Wire, Electrical (Power, Fixed Installation)
MIL-I-24391	Insulation Tape, Electrical, Plastic, Pressure Sensitive

REFERENCE DOCUMENTS

NFPA-70	National Electrical Code (NEC)

NFPA-780	Standard for the Installation of Lightning Protection Systems
MIL-S-23586F	Performance Specification: Sealing Compound (with Accelerator), Silicone Rubber, Electrical
ANSI/IEEE STD 81	IEEE Guide for Measuring Earth Resistivity, Ground Impedance, and Earth Surface Potentials of a Ground System

END OF ITEM L-108

Item L-110 Airport Underground Electrical Duct Banks and Conduits

DESCRIPTION

110-1.1 This item shall consist of underground electrical conduits and duct banks (single or multiple conduits encased in concrete or buried in sand) installed per this specification at the locations and per the dimensions, designs, and details shown on the plans. This item shall include furnishing and installing of all underground electrical duct banks and individual and multiple underground conduits. It shall also include all turfing trenching, backfilling, removal, and restoration of any paved or turfed areas; concrete encasement, mandrelling, pulling lines, duct markers, plugging of conduits, and the testing of the installation as a completed system ready for installation of cables per the plans and specifications. This item shall also include furnishing and installing conduits and all incidentals for providing positive drainage of the system. Verification of existing ducts is incidental to the pay items provided in this specification.

EQUIPMENT AND MATERIALS

110-2.1 General

a. All equipment and materials covered by referenced specifications shall be subject to acceptance through manufacturer's certification of compliance with the applicable specification when requested by the Engineer.

b. Manufacturer's certifications shall not relieve the Contractor of the responsibility to provide materials per these specifications and acceptable to the Engineer. Materials supplied and/or installed that do not comply with these specifications shall be removed, when directed by the Engineer and replaced with materials, that comply with these specifications, at the Contractor's cost.

c. All materials and equipment used to construct this item shall be submitted to the Engineer for approval prior to ordering the equipment. Submittals consisting of marked catalog sheets or shop drawings shall be provided. Submittal data shall be presented in a clear, precise and thorough manner. Original catalog sheets are preferred. Photocopies are acceptable provided they are as good a quality as the original. Clearly and boldly mark each copy to identify products or models applicable to this project. Indicate all optional equipment and delete any non-pertinent data. Submittals for components of electrical equipment and systems shall identify the equipment to which they apply on each submittal sheet. Markings shall be made bold and clear with arrows or circles (highlighting is not acceptable). Contractor is solely responsible for delays in the project that may accrue directly or indirectly from late submissions or resubmissions of submittals.

d. The data submitted shall be sufficient, in the opinion of the Engineer, to determine compliance with the plans and specifications. The Engineer reserves the right to reject any and all equipment, materials or procedures, that do not meet the system design and the standards and codes, specified in this document.

e. All equipment and materials furnished and installed under this section shall be guaranteed against defects in materials and workmanship for at least **twelve (12) months** from the date of final acceptance by the Owner. The defective materials and/or equipment shall be repaired or replaced, at the Owner's discretion, with no additional cost to the Owner. The Contractor shall be responsible to maintain a minimum insulation resistance per AC 150/5340-26B, Maintenance Airport Visual Aid Facilities, Table 5-1 and

paragraph 5.1.3.1, with isolation transformers connected in new circuits and new segments of existing circuits through the end of the contract warranty period.

110-2.2 Steel conduit. Rigid galvanized steel (RGS) conduit and fittings shall be hot dipped galvanized inside and out and conform to the requirements of Underwriters Laboratories Standards 6, 514B, and 1242. All RGS conduits or RGS elbows installed below grade, in concrete, permanently wet locations or other similar environments shall be painted with a 10 mil thick coat of asphaltum sealer or shall have a factory bonded polyvinyl chloride (PVC) cover. Any exposed galvanizing or steel shall be coated with 10 mil of asphaltum sealer. When using PVC coated RGS conduit, care shall be exercised not to damage the factory PVC coating. Damaged PVC coating shall be repaired per the manufacturer's written instructions.

110-2.3 Plastic conduit. Plastic conduit and fittings-shall conform to the following requirements:

- UL 514B covers W-C-1094-Conduit fittings all types, classes 1 thru 3 and 6 thru 10.
- UL 514C covers W-C-1094- all types, Class 5 junction box and cover in plastic (PVC).
- UL 651 covers W-C-1094-Rigid PVC Conduit, types I and II, Class 4.
- UL 651A covers W-C-1094-Rigid PVC Conduit and high density polyethylene (HDPE) Conduit type III and Class 4.

Underwriters Laboratories Standards UL-651 and Article 352 of the current National Electrical Code shall be one of the following, as shown on the plans:

a. Type I–Schedule 40 PVC suitable for underground use either direct-buried or encased in concrete.

b. Type II–Schedule 40 PVC suitable for either above ground or underground use.

c. Type III – Schedule 80 PVC suitable for either above ground or underground use either direct-buried or encased in concrete.

d. Type III –HDPE pipe, minimum standard dimensional ratio (SDR) 11, suitable for placement with directional boring under pavement.

110-2.4 Split conduit. Split conduit shall be pre-manufactured for the intended purpose and shall be made of steel or plastic.

110-2.5 Conduit spacers. Conduit spacers shall be prefabricated interlocking units manufactured for the intended purpose. They shall be of double wall construction made of high grade, high density polyethylene complete with interlocking cap and base pads, They shall be designed to accept No. 4 reinforcing bars installed vertically.

110-2.6 Concrete. Concrete shall conform to Item P-610, Structural Portland Cement Concrete, using **one inch** maximum size coarse aggregate with a minimum 28-day compressive strength of **4,000** psi. Where reinforced duct banks are specified, reinforcing steel shall conform to ASTM A615 Grade 60. Concrete and reinforcing steel are incidental to the respective pay item of which they are a component part

110-2.7 Flowable backfill. Flowable material used to back fill conduit and duct bank trenches shall conform to the requirements of Item P-153, Controlled Low Strength Material. Fill shall be designed to achieve a 28-day compressive strength of 200 psi (1.4 MPa) under pavement.

110-2.8 Detectable warning tape. Plastic, detectable, American Public Works Association (APWA) Red (electrical power lines, cables, conduit and lighting cable) with continuous legend magnetic tape shall be polyethylene film with a metallized foil core and shall be 3-6 inches (75-150 mm) wide. Detectable tape is incidental to the respective bid item.

CONSTRUCTION METHODS

110-3.1 General. The Contractor shall install underground duct banks and conduits at the approximate locations indicated on the plans. The Engineer shall indicate specific locations as the work progresses, if required to differ from the plans. Duct banks and conduits shall be of the size, material, and type indicated on the plans or specifications. Where no size is indicated on the plans or in the specifications, conduits shall be not less than 2 inches (50 mm) inside diameter or comply with the National Electrical Code based on cable to be installed, whichever is larger. All duct bank and conduit lines shall be laid so as to grade toward access points and duct or conduit ends for drainage. Unless shown otherwise on the plans, grades shall be at least 3 inches (75 mm) per 100 feet (30 m). On runs where it is not practicable to maintain the grade all one way, the duct bank and conduit lines shall be graded from the center in both directions toward access points or conduit ends, with a drain into the storm drainage system. Pockets or traps where moisture may accumulate shall be avoided. No duct bank or underground conduit shall be less than 18 inches (0.5 m) below finished grade. Where under pavement, the top of the duct bank shall not be less than 18 inches (0.5 m) below the subgrade.

The Contractor shall mandrel each individual conduit whether the conduit is direct-buried or part of a duct bank. An iron-shod mandrel, not more than 1/4 inch (6 mm) smaller than the bore of the conduit shall be pulled or pushed through each conduit. The mandrel shall have a leather or rubber gasket slightly larger than the conduit hole.

The Contractor shall swab out all conduits/ducts and clean base can, manhole, pull boxes, etc., interiors IMMEDIATELY prior to pulling cable. Once cleaned and swabbed the light bases, manholes, pull boxes, etc., and all accessible points of entry to the duct/conduit system shall be kept closed except when installing cables. Cleaning of ducts, base cans, manholes, etc., is incidental to the pay item of the item being cleaned. All raceway systems left open, after initial cleaning, for any reason shall be recleaned at the Contractor's expense. All accessible points shall be kept closed when not installing cable. The Contractor shall verify existing ducts proposed for use in this project as clear and open. The Contractor shall notify the Engineer of any blockage in the existing ducts.

For pulling the permanent wiring, each individual conduit, whether the conduit is direct-buried or part of a duct bank, shall be provided with a 200 pound (90 kg) test polypropylene pull rope. The ends shall be secured and sufficient length shall be left in access points to prevent it from slipping back into the conduit. Where spare conduits are installed, as indicated on the plans, the open ends shall be plugged with removable tapered plugs, designed for this purpose.

All conduits shall be securely fastened in place during construction and shall be plugged to prevent contaminants from entering the conduits. Any conduit section having a defective joint shall not be installed. Ducts shall be supported and spaced apart using approved spacers at intervals not to exceed 5 feet (1.5 m).

Unless otherwise shown on the plans, concrete encased duct banks shall be used when crossing under pavements expected to carry aircraft loads, such as runways, taxiways, taxilanes, ramps and aprons. When under paved shoulders and other paved areas, conduit and duct banks shall be encased using flowable fill for protection.

All conduits within concrete encasement of the duct banks shall terminate with female ends for ease in current and future use. Install factory plugs in all unused ends. Do not cover the ends or plugs with concrete.

Where turf is well established and the sod can be removed, it shall be carefully stripped and properly stored.

Trenches for conduits and duct banks may be excavated manually or with mechanical trenching equipment unless in pavement, in which case they shall be excavated with mechanical trenching equipment. Walls of trenches shall be essentially vertical so that a minimum of shoulder surface is disturbed. Blades of graders shall not be used to excavate the trench.

When rock is encountered, the rock shall be removed to a depth of at least 3 inches (75 mm) below the required conduit or duct bank depth and it shall be replaced with bedding material of earth or sand containing no mineral aggregate particles that would be retained on a 1/4 inch (6 mm) sieve. Flowable backfill may alternatively be used The Contractor shall ascertain the type of soil or rock to be excavated before bidding. All such rock removal shall be performed and paid for under Item P-152.

Underground electrical warning (Caution) tape shall be installed in the trench above all underground duct banks and conduits in unpaved areas. Contractor shall submit a sample of the proposed warning tape for approval by the Engineer. If not shown on the plans, the warning tape shall be located 6 inches above the duct/conduit or the counterpoise wire if present.

Joints in plastic conduit shall be prepared per the manufacturer’s recommendations for the particular type of conduit. Plastic conduit shall be prepared by application of a plastic cleaner and brushing a plastic solvent on the outside of the conduit ends and on the inside of the couplings. The conduit fitting shall then be slipped together with a quick one-quarter turn twist to set the joint tightly. Where more than one conduit is placed in a single trench, or in duct banks, joints in the conduit shall be staggered a minimum of 2 feet (60 cm).

Changes in direction of runs exceeding 10 degrees, either vertical or horizontal, shall be accomplished using manufactured sweep bends.

Whether or not specifically indicated on the drawings, where the soil encountered at established duct bank grade is an unsuitable material, as determined by the Engineer, the unsuitable material shall be removed per Item P-152 and replaced with suitable material. Alternatively, additional duct bank supports that are adequate and stable shall be installed, as approved by the Engineer.

All excavation shall be unclassified and shall be considered incidental to the respective L-110 pay item of which it is a component part. Dewatering necessary for duct installation, erosion and turbidity control, per

Federal, state, and local requirements is incidental to its respective pay item as a part of Item L-110. The cost of all excavation regardless of type of material encountered, shall be included in the unit price bid for the L-110 Item.

Unless otherwise specified, excavated materials that are deemed by the Engineer to be unsuitable for use in backfill or embankments shall be removed and disposed of offsite.

Any excess excavation shall be filled with suitable material approved by the Engineer and compacted per Item P-152.

It is the Contractor's responsibility to locate existing utilities within the work area prior to excavation. Where existing active cables) cross proposed installations, the Contractor shall ensure that these cables are adequately protected. Where crossings are unavoidable, no splices will be allowed in the existing cables, except as specified on the plans. Installation of new cable where such crossings must occur shall proceed as follows:

a. Existing cables shall be located manually. Unearthed cables shall be inspected to assure absolutely no damage has occurred

b. Trenching, etc., in cable areas shall then proceed with approval of the Engineer, with care taken to minimize possible damage or disruption of existing cable, including careful backfilling in area of cable.

In the event that any previously identified cable is damaged during the course of construction, the Contractor shall be responsible for the complete repair.

110-3.2 Duct banks. Unless otherwise shown in the plans, duct banks shall be installed so that the top of the concrete envelope is not less than 18 inches (0.5 m) below the bottom of the base or stabilized base course layers where installed under runways, taxiways, aprons, or other paved areas, and not less than 18 inches (0.5 m) below finished grade where installed in unpaved areas.

Unless otherwise shown on the plans, duct banks under paved areas shall extend at least 3 feet (1 m) beyond the edges of the pavement or 3 feet (1 m) beyond any under drains that may be installed alongside the paved area. Trenches for duct banks shall be opened the complete length before concrete is placed so that if any obstructions are encountered, provisions can be made to avoid them. Unless otherwise shown on the plans, all duct banks shall be placed on a layer of concrete not less than 3 inches (75 mm) thick prior to its initial set. The Contractor shall space the conduits not less than 3 inch (75 mm) apart (measured from outside wall to outside wall). All such multiple conduits shall be placed using conduit spacers applicable to the type of conduit. As the conduit laying progresses, concrete shall be placed around and on top of the conduits not less than 3 inches (75 mm) thick unless otherwise shown on the plans. All conduits shall terminate with female ends for ease of access in current and future use. Install factory plugs in all unused ends. Do not cover the ends or plugs with concrete.

Conduits forming the duct bank shall be installed using conduit spacers. No. 4 reinforcing bars shall be driven vertically into the soil a minimum of 6 inches (150 mm) to anchor the assembly into the earth prior to placing the concrete encasement. For this purpose, the spacers shall be fastened down with locking collars attached to the vertical bars. Spacers shall be installed at 5-foot (1.5-m) intervals. Spacers shall be in the proper sizes and configurations to fit the conduits. Locking collars and spacers shall be submitted to the Engineer for review prior to use.

When specified, the Contractor shall reinforce the bottom side and top of encasements with steel reinforcing mesh or fabric or other approved metal reinforcement. When directed, the Contractor shall supply additional supports where the ground is soft and boggy, where ducts cross under roadways, or where shown on the plans. Under such conditions, the complete duct structure shall be supported on reinforced concrete footings, piers, or piles located at approximately 5-foot (1.5-m) intervals.

All pavement surfaces that are to have ducts installed therein shall be neatly saw cut to form a vertical face. All excavation shall be included in the contract with price for the duct.

Install a plastic, detectable, color as noted, 3 to 6 inches (75 to 150 mm) wide tape, 8 inches (200 mm) minimum below grade above all underground conduit or duct lines not installed under pavement. Utilize the 3-inch (75-mm) wide tape only for single conduit runs. Utilize the 6-inch (150-mm) wide tape for multiple conduits and duct banks. For duct banks equal to or greater than 24 inches (600 mm) in width, utilize more than one tape for sufficient coverage and identification of the duct bank as required.

When existing cables are to be placed in split duct, encased in concrete, the cable shall be carefully located and exposed by hand tools. Prior to being placed in duct, the Engineer shall be notified so that he may inspect the cable and determine that it is in good condition. Where required, split duct shall be installed as shown on the drawings or as required by the Engineer.

110-3.3 Conduits without concrete encasement. Trenches for single-conduit lines shall be not less than 6 inches (150 mm) nor more than 12 inches (300 mm) wide. The trench for 2 or more conduits installed at the same level shall be proportionately wider. Trench bottoms for conduits without concrete encasement shall be made to conform accurately to grade so as to provide uniform support for the conduit along its entire length.

Unless otherwise shown on the plans, a layer of fine earth material, at least 4 inches (100 mm) thick (loose measurement) shall be placed in the bottom of the trench as bedding for the conduit. The bedding material shall consist of soft dirt, sand or other fine fill, and it shall contain no particles that would be retained on a 1/4 inch (6 mm) sieve. The bedding material shall be tamped until firm. Flowable backfill may alternatively be used.

Unless otherwise shown on plans, conduits shall be installed so that the tops of all conduits within the Airport's secured area where trespassing is prohibited are at least 18 inches (0.5 m) below the finished grade. Conduits outside the Airport's secured area shall be installed so that the tops of the conduits are at least 24 inches (60 cm) below the finished grade per National Electric Code (NEC), Table 300.5.

When two or more individual conduits intended to carry conductors of equivalent voltage insulation rating are installed in the same trench without concrete encasement, they shall be spaced not less than 3 inches (75 mm) apart (measured from outside wall to outside wall) in a horizontal direction and not less than 6 inches (150 mm) apart in a vertical direction. Where two or more individual conduits intended to carry conductors of differing voltage insulation rating are installed in the same trench without concrete encasement, they shall be placed not less than 3 inches (75 mm) apart (measured from outside wall to outside wall) in a horizontal direction and lot less than 6 inches (150 mm) apart in a vertical direction.

Trenches shall be opened the complete length between normal termination points before conduit is installed so that if any unforeseen obstructions are encountered, proper provisions can be made to avoid them.

Conduits shall be installed using conduit spacers. No. 4 reinforcing bars shall be driven vertically into the soil a minimum of 6 inches (150 mm) to anchor the assembly into the earth while backfilling. For this purpose, the spacers shall be fastened down with locking collars attached to the vertical bars. Spacers shall be installed at 5-foot (1.5-m) intervals. Spacers shall be in the proper sizes and configurations to fit the conduits. Locking collars and spacers shall be submitted to the Engineer for review prior to use.

110-3.4 Markers. The location of each end and of each change of direction of conduits and duct banks shall be marked by a concrete slab marker 2 feet (60 cm) square and 4 - 6 inches (100 - 150 mm) thick extending approximately one inch (25 mm) above the surface. The markers shall also be located directly above the ends of all conduits or duct banks, except where they terminate in a junction/access structure or building. Each cable or duct run from a line of lights and signs to the equipment vault must be marked at approximately every 200 feet (61 m) along the cable or duct run, with an additional marker at each change of direction of cable or duct run.

The Contractor shall impress the word "DUCT" or "CONDUIT" on each marker slab. Impression of letters shall be done in a manner, approved by the Engineer, for a neat, professional appearance. All letters and words must be neatly stenciled. After placement, all markers shall be given one coat of high-visibility orange paint, as approved by the Engineer. The Contractor shall also impress on the slab the number and size of conduits beneath the marker along with all other necessary information as determined by the Engineer. The letters shall be 4 inches (100 mm) high and 3 inches (75 mm) wide with width of stroke 1/2 inch (12 mm) and 1/4 inch (6 mm) deep or as large as the available space permits. Furnishing and installation of duct markers is incidental to the respective duct pay item.

110-3.5 Backfilling for conduits. For conduits, 8 inches (200 mm) of sand, soft earth, or other fine fill (loose measurement) shall be placed around the conduits ducts and carefully tamped around and over them with hand tampers. The remaining trench shall then be backfilled and compacted per Item P-152 "Excavation and Embankment" except that material used for back fill shall be select material not larger than 4 inches (100 mm) in diameter.

Flowable backfill may alternatively be used.

Trenches shall not contain pools of water during back filling operations.

The trench shall be completely backfilled and tamped level with the adjacent surface; except that, where sod is to be placed over the trench, the backfilling shall be stopped at a depth equal to the thickness of the sod to be used, with proper allowance for settlement.

Any excess excavated material shall be removed and disposed of per instructions issued by the Engineer.

110-3.6 Backfilling for duct banks. After the concrete has cured, the remaining trench shall be backfilled and compacted per Item P-152 "Excavation and Embankment" except that the material used for backfill shall be select material not larger than 4 inches (100 mm) in diameter. In addition to the requirements of P-152, where duct banks are installed under pavement, one moisture/density test per lift shall be made for each 250 linear feet (76 m) of duct bank or one work period's construction, whichever is less.

Flowable backfill may alternatively be used.

Trenches shall not contain pools of water during backfilling operations.

The trench shall be completely backfilled and tamped level with the adjacent surface; except that, where sod is to be placed over the trench, the backfilling shall be stopped at a depth equal to the thickness of the sod to be used, with proper allowance for settlement.

Any excess excavated material shall be removed and disposed of per instructions issued by the Engineer.

110-3.7 Restoration. Where sod has been removed, it shall be replaced as soon as possible after the backfilling is completed. All areas disturbed by the work shall be restored to its original condition. The restoration shall include **seeding and mulching** shown on the plans. The Contractor shall be held responsible for maintaining all disturbed surfaces and replacements until final acceptance. All restoration shall be considered incidental to the respective L-110 pay item. Following restoration of all trenching near airport movement surfaces, the Contractor shall thoroughly visually inspect the area for foreign object debris (FOD), and remove any such FOD that is found. This FOD inspection and removal shall be considered incidental to the pay item of which it is a component part.

METHOD OF MEASUREMENT

110-4.1 Underground conduits and duct banks shall be measured by the linear feet (meter) of conduits and duct banks installed, including encasement, locator tape, trenching and backfill with designated material, and for drain lines, the termination at the drainage structure, all measured in place, completed, and accepted. Separate measurement shall be made for the various types and sizes.

BASIS OF PAYMENT

110-5.1 Payment will be made at the contract unit price per linear foot for each type and size of conduit and duct bank completed and accepted, including trench and backfill with the designated material, and, for drain lines, the termination at the drainage structure. This price shall be full compensation for furnishing all materials and for all preparation, assembly, and installation of these materials, and for all labor, equipment, tools, and incidentals necessary to complete this item per the provisions and intent of the plans and specifications.

110-5.2 Payment will be made under:

Item L-110-5.1	Electrical Duct Bank, 1ea/1” Dia. PVC-DB - per linear foot
Item L-110-5.2	Electrical Duct Bank, 1ea/2” Dia. PVC-Concrete-Encased - per linear foot

MATERIAL REQUIREMENTS

Advisory Circular (AC) 150/5340-30

Design and Installation Details for Airport Visual Aids

AC 150/5345-53	Airport Lighting Equipment Certification Program
ASTM A615	Standard Specification for Deformed and Plain Carbon-Steel Bars for Concrete Reinforcement

ASTM D1556	Standard Test Method for Density and Unit Weight of Soil in Place by the Sand-Cone Method
ASTM D1557	Standard Test Methods for Laboratory Compaction Characteristics of Soil Using Modified Effort (56,000 ft-lbf/ft3(2,700 kN-m/m3))
ASTM D2167	Standard Test Method for Density and Unit Weight of Soil in Place by the Rubber Balloon Method
ASTM D2922	Standard Test Methods for Density of Soil and Soil-Aggregate in Place by Nuclear Methods (Shallow Depth)
NFPA-70	National Electrical Code (NEC)
Underwriters Laboratories Standard 6	
	Electrical Rigid Metal Conduit - Steel
Underwriters Laboratories Standard 514B	
	Conduit, Tubing, and Cable Fittings
Underwriters Laboratories Standard 514C	
	Nonmetallic Outlet Boxes, Flush-Device Boxes, and Covers
Underwriters Laboratories Standard 1242	
	Electrical Intermediate Metal Conduit Steel
Underwriters Laboratories Standard 651	
	Schedule 40, 80, Type EB and A Rigid PVC Conduit and Fittings
Underwriters Laboratories Standard 651A	
	Type EB and A Rigid PVC Conduit and HDPE Conduit

END OF ITEM L-110

Item L-125 Installation of Airport Lighting Systems

DESCRIPTION

125-1.1 This item shall consist of airport lighting systems furnished and installed in accordance with this specification, any referenced specifications, and the applicable Federal Aviation Administration Advisory Circulars. The systems shall be installed at the location and in accordance with the dimensions, layout, design, and details shown in the plans. This item shall include furnishing and installing all lights, signs, transformers, base cans, mounting assemblies, base plates, adapter rings, concrete work, taxiway ending markers, cable connections, all lamps, testing of the installation and all incidentals and appurtenances necessary to place the systems in operation as completed units to the satisfaction of the Engineer.

EQUIPMENT AND MATERIALS

125-2.1 General

a. All equipment and materials covered by referenced specifications shall be subject to acceptance through manufacturer's certification of compliance with the applicable specification when requested by the Engineer.

b. Manufacturer's certifications shall not relieve the Contractor of the responsibility to provide materials per these specifications and acceptable to the Engineer. Materials supplied and/or installed that do not comply with these specifications shall be removed, when directed by the Engineer and replaced with materials, that comply with these specifications, at the Contractor's cost.

c. All materials and equipment used to construct this item shall be submitted to the Engineer for approval prior to ordering the equipment. Submittals consisting of marked catalog sheets or shop drawings shall be provided. Submittal data shall be presented in a clear, precise and thorough manner. Original catalog sheets are preferred. Photocopies are acceptable provided they are as good a quality as the original. Clearly and boldly mark each copy to identify products or models applicable to this project. Indicate all optional equipment and delete any non-pertinent data. Submittals for components of electrical equipment and systems shall identify the equipment to which they apply on each submittal sheet. Markings shall be made bold and clear with arrows or circles (highlighting is not acceptable). Contractor is solely responsible for delays in the project that may accrue directly or indirectly from late submissions or resubmissions of submittals.

d. The data submitted shall be sufficient, in the opinion of the Engineer, to determine compliance with the plans and specifications. The Engineer reserves the right to reject any and all equipment, materials or procedures, that do not meet the system design and the standards and codes, specified in this document.

e. All equipment and materials furnished and installed under this section shall be guaranteed against defects in materials and workmanship for a period of at least **twelve (12) months** from the date of final acceptance by the Owner. The defective materials and/or equipment shall be repaired or replaced, at the Owner's discretion, with no additional cost to the Owner.

125-2.2 Fixtures.

125-2.2.1 Taxiway

a. L-861T(L) Elevated LED Medium Intensity Taxiway Light (MITL)

125-2.2.2 High Mast

a. Fixture. Basis of design fixture is a Musco TLC-LED-600 luminaire and driver.

b. Pole. Tapered, round steel pole, 70 ft.

125-2.3 Base Cans

125-2.3.1 L-867 (non-load-bearing)

125-2.4 Isolation transformers. The isolation transformers shall be L-830, 6.6 amp primary to 6.6 amp secondary, sized per the fixture manufacturer's recommendations and conforming to AC 150/5345-47C, latest edition.

125-2.5 Tape. Plastic electrical tapes shall be Scotch Electrical Tape number 88 as manufactured by the Minnesota Mining and Manufacturing Company, or an approved equal. Electrical coating shall be Scotchkote as manufactured by the Minnesota Mining and Manufacturing Company, or approved equal.

125-2.6 Heat shrink kit. Heat shrinkable tubing with integral sealant for waterproofing L-823 connectors shall be Sigmaform Corporation Type APL, or Raychem Corporation Type ADL, or Crouse Hinds Type HSK or approved equal.

125-2.7 L-823 connectors. Connectors shall comply with specification L-108, Installation of Underground Cable for Airports.

125-2.8 Strain relief connectors. Strain relief connectors shall be Liquid Tight Thomas & Betts 2500 series with WMG-PG wire mesh cable grip or approved equal.

125-2.9 Frangible couplings. All elevated items shall be installed on frangible couplings in accordance with the respective Federal Aviation Administration Advisory Circular. Frangible couplings shall be metallic and provide an electrical grounding path between the fixture/sign and the base can.

125-2.10 Identification/number plates. Fixture, manhole and sign identification markers shall be brass bench markers by Surv-Kap of Tucson, Arizona model number M/M-B2 with flat top or approved equal.

125-2.11 Anti-sieze compound. The anti-seize compound shall be Ideal "Noalox" or approval equal. Use Dow Corning Compound III valve lubricant curing sealant to seal between sections of base cans, spacer rings, adaptor rings or fixtures.

125-2.12 Fillers and adhesives. Joint sealing filler shall comply with Specification P-605, Joint Sealing Filler and adhesive compounds shall comply with Specification P-606, Adhesive Compounds, Two-Component, For Sealing Wire and Lights and Pavement. The P-605 and P-606 compounds shall be formulated so they are compatible with the pavement type with which they are to be used.

125-2.13 Concrete. Concrete for backfill shall comply with Specification P-610, Structural Portland Cement Concrete and have a maximum size coarse aggregate of 1 inch and shall have a 28-day comprehensive strength of not less than 4,000 PSI and increasing with age.

125-2.14 Delivery, storage and handling. Ship materials and equipment disassembled only to the extent necessary for reasons of shipping limitations, handling facilities, and to avoid damage during shipment. Maintain materials and equipment in new condition. This shall include the use of heat lamps, suitable coverings, indoor storage, etc. to properly protect the equipment and materials. Any equipment or materials, in the opinion of the Owner or Engineer, damaged during construction or storage periods shall be replaced by and at the expense of the Contractor.

CONSTRUCTION METHODS

125-3.1 Testing.

a. Before work begins on the taxiway lighting circuit, perform a megger test on the circuit, noting time of day, weather conditions, test equipment, calibration date, name of tester, name of witness. Submit to Engineer. Following completion of taxiway cabling installation, perform a second megger tests on the entire circuit, noting time of day, weather conditions, test equipment, calibration date, name of tester, name of witness.

b. Following completion of high mast lighting installation and functional testing. Perform field test measurements

125-3.2 Spare Parts. The Manufacturer/Contractor by submitting a bid assures the Owner that it will sell to the Owner or any of the Owner's designated representatives any and all parts for materials furnished under this contract at the lowest price the Contractor or its subcontractors, or suppliers furnish them to any second party. This pricing requirement shall apply for five (5) years from the date of final acceptance of the contract. In furnishing parts at this price, the Contractor shall provide the parts within one week of an approved purchase agreement. The Owner shall have the right to verify that the prices the Owner pays for the parts are the lowest and if they are determined not to be, then the Owner shall receive a payment from the Manufacturer/Contractor in the amount of one and one-half (1.5) times the difference. The Contractor is responsible to coordinate and obtain this agreement, in writing, from the manufacturer.

METHOD OF MEASUREMENT

125-4.1 Stake-mounted light fixtures shall be measured by each unit completed in place and accepted. The following items are specifically included in each unit: fixture w/ lamp, stem, frangible coupling, stake-mount, isolation transformer, connectors, excavation & backfill, and other accessories shown in drawing details and as required for a complete and functional system.

125-4.2 Base-mounted lighting fixtures shall be measured by each unit completed in place and accepted. The following items are specifically included in each unit: fixture w/ lamp, stem, frangible coupling, light base, corden base, isolation transformer, connectors, excavation & backfill, concrete, and other accessories shown in drawing details and as required for a complete and functional system.

125-4.3 High mast lighting poles shall be measured by each unit completed in place and accepted. The following items are specifically included in each unit: LED fixtures, obstruction light, light pole, foundation, lightning protection, grounding components, cable, supports, connectors, disconnects & drivers, enclosures, concrete & reinforcing steel, adjacent handhole, and other accessories shown in drawing details and as required for a complete and functional system.

BASIS OF PAYMENT

125-5.1 The accepted quantity of stake-mounted light fixtures will be paid for at the Contract unit price per each completed and in place This price shall be full compensation for furnishing all materials and for all preparation, excavation, backfilling and placing of the materials, furnishing and installation of appurtenances and connections to duct banks and other structures as may be required to complete the item as shown on the plans and for all labor, equipment, tools and incidentals necessary to complete the structure.

125-5.2 The accepted quantity of base-mounted light fixtures will be paid for at the Contract unit price per each completed and in place This price shall be full compensation for furnishing all materials and for all preparation, excavation, backfilling and placing of the materials, furnishing and installation of appurtenances and connections to duct banks and other structures as may be required to complete the item as shown on the plans and for all labor, equipment, tools and incidentals necessary to complete the structure.

125-5.3 The accepted quantity of high mast light poles will be paid for at the Contract unit price per each completed and in place This price shall be full compensation for furnishing all materials and for all preparation, excavation, backfilling and placing of the materials, furnishing and installation of appurtenances and connections to duct banks and other structures as may be required to complete the item as shown on the plans and for all labor, equipment, tools and incidentals necessary to complete the structure.

125-5.4 required, to complete this item as shown in the plans and to the satisfaction of the Engineer.

Payment will be made under:

Item L-125-5.1	High Mast Light Pole and Foundation– per each
Item L-125-5.2	High Mast Light Fixtures – per each
Item L-125-5.3	Base-Mounted L-861T(L) – per each

MATERIAL REQUIREMENTS

ANSI/IEEE STD 81	IEEE Guide for Measuring Earth Resistivity, Ground Impedance, and Earth Surface Potentials of a Ground System
Advisory Circular (AC) 150/5345-7	Specification for L-824 Underground Electrical Cable for Airport Lighting Circuits
AC 150/5345-26	Specification for L-823 Plug and Receptacle, Cable Connectors
AC 150/5345-42	Specification for Airport Light Bases, Transformer Housings, Junction Boxes, and Accessories
AC 150/5340-30	Design and Installation Details for Airport Visual Aids
AC 150/5345-53	Airport Lighting Equipment Certification Program

Commercial Item Description A-A 59544	
	Cable and Wire, Electrical (Power, Fixed Installation)
ASTM A27	Standard Specification for Steel Castings, Carbon, for General Application
ASTM A47	Standard Specification for Ferritic Malleable Iron Castings
ASTM A48	Standard Specification for Gray Iron Castings
ASTM A123	Standard Specification for Zinc (Hot Dip Galvanized) Coatings on Iron and Steel Products
ASTM A283	Standard Specification for Low and Intermediate Tensile Strength Carbon Steel Plates
ASTM A536	Standard Specification for Ductile Iron Castings
ASTM A615	Standard Specification for Deformed and Plain Carbon-Steel Bars for Concrete Reinforcement
ASTM A897	Standard Specification for Austempered Ductile Iron Castings
ASTM C144	Standard Specification for Aggregate for Masonry Mortar
ASTM C150	Standard Specification for Portland Cement
ASTM C206	Standard Specification for Finishing Hydrated Lime
FAA EB #83	In Pavement Light Fixture Bolts
MIL-P-21035	Paint High Zinc Dust Content, Galvanizing Repair
NFPA-70	National Electrical Code (NEC)

END OF ITEM L-125

Item L-26 05 11

REQUIREMENTS FOR ELECTRICAL INSTALLATIONS

PART 1 - GENERAL

1.1 DESCRIPTION

A. This section applies to all sections of Division 26.

B. Furnish and install electrical wiring, systems, equipment and accessories in accordance with the specifications and drawings. Capacities and ratings of motors, transformers, cable, switchboards, switchgear, panelboards, motor control centers, generators, automatic transfer switches, and other items and arrangements for the specified items are shown on drawings.

C. Electrical service entrance equipment and arrangements for temporary and permanent connections to the utility's system shall conform to the utility's requirements. Coordinate fuses, circuit breakers and relays with the utility's system, and obtain utility approval for sizes and settings of these devices.

D. Wiring ampacities specified or shown on the drawings are based on copper conductors, with the conduit and raceways accordingly sized. Aluminum conductors are prohibited.

1.2 MINIMUM REQUIREMENTS

A. References to the International Building Code (IBC), National Electrical Code (NEC), Underwriters Laboratories, Inc. (UL) and National Fire Protection Association (NFPA) are minimum installation requirement standards.

B. Drawings and other specification sections shall govern in those instances where requirements are greater than those specified in the above standards.

1.3 TEST STANDARDS

A. All materials and equipment shall be listed, labeled or certified by a nationally recognized testing laboratory to meet Underwriters Laboratories, Inc., standards where test standards have been established. Equipment and materials which are not covered by UL Standards will be accepted provided equipment and material is listed, labeled, certified or otherwise determined to meet safety requirements of a nationally recognized testing laboratory. Equipment of a class which no nationally recognized testing laboratory accepts, certifies, lists, labels, or determines to be safe, will be considered if inspected or tested in accordance with national industrial standards, such as NEMA, or ANSI. Evidence of compliance shall include certified test reports and definitive shop drawings.

B. Definitions:

1. Listed; Equipment, materials, or services included in a list published by an organization that is acceptable to the authority having jurisdiction and concerned with evaluation of products or services, that maintains periodic inspection of production or listed equipment or materials or periodic evaluation of services, and whose listing states that the equipment, material, or services either meets appropriate designated standards or has been tested and found suitable for a specified purpose.
2. Labeled; Equipment or materials to which has been attached a label, symbol, or other identifying mark of an organization that is acceptable to the authority having jurisdiction and concerned with product evaluation, that maintains periodic inspection of production of labeled equipment or materials, and by whose labeling the manufacturer indicates compliance with appropriate standards or performance in a specified manner.
3. Certified; equipment or product which:
    a. Has been tested and found by a nationally recognized testing laboratory to meet nationally recognized standards or to be safe for use in a specified manner.
    b. Production of equipment or product is periodically inspected by a nationally recognized testing laboratory.
    c. Bears a label, tag, or other record of certification.
4. Nationally recognized testing laboratory; laboratory which is approved, in accordance with OSHA regulations, by the Secretary of Labor.

1.4 QUALIFICATIONS (PRODUCTS AND SERVICES)

A. Manufacturers Qualifications: The manufacturer shall regularly and presently produce, as one of the manufacturer's principal products, the equipment and material specified for this project, and shall have manufactured the item for at least three years.

B. Product Qualification:

1. Manufacturer's product shall have been in satisfactory operation, on three installations of similar size and type as this project, for approximately three years.
2. The Airport reserves the right to require the Contractor to submit a list of installations where the products have been in operation before approval.

C. Service Qualifications: There shall be a permanent service organization maintained or trained by the manufacturer which will render satisfactory service to this installation within four hours of receipt of notification that service is needed. Submit name and address of service organizations.

1.5 APPLICABLE PUBLICATIONS

Applicable publications listed in all Sections of Division are the latest issue, unless otherwise noted.

1.6 MANUFACTURED PRODUCTS

A. Materials and equipment furnished shall be of current production by manufacturers regularly engaged in the manufacture of such items, for which replacement parts shall be available.

B. When more than one unit of the same class or type of equipment is required, such units shall be the product of a single manufacturer.

C. Equipment Assemblies and Components:

1. Components of an assembled unit need not be products of the same manufacturer.
2. Manufacturers of equipment assemblies, which include components made by others, shall assume complete responsibility for the final assembled unit.
3. Components shall be compatible with each other and with the total assembly for the intended service.
4. Constituent parts which are similar shall be the product of a single manufacturer.

D. Factory wiring shall be identified on the equipment being furnished and on all wiring diagrams.

E. When Factory Testing Is Specified:

1. The Engineer shall have the option of witnessing factory tests. The contractor shall notify the Engineer a minimum of 15 working days prior to the manufacturers making the factory tests.
2. Four copies of certified test reports containing all test data shall be furnished to the Engineer prior to final inspection and not more than 90 days after completion of the tests.
3. When equipment fails to meet factory test and re-inspection is required, the contractor shall be liable for all additional expenses, including expenses of the Airport.

1.7 EQUIPMENT PROTECTION

A. Equipment and materials shall be protected during shipment and storage against physical damage, vermin, dirt, corrosive substances, fumes, moisture, cold and rain.

1. Store equipment indoors in clean dry space with uniform temperature to prevent condensation. Equipment shall include but not be limited to switchgear, switchboards, panelboards, transformers, motor control centers, motor controllers, uninterruptible power systems, enclosures, controllers, circuit protective devices, cables, wire, light fixtures, electronic equipment, and accessories.
2. During installation, equipment shall be protected against entry of foreign matter; and be vacuum-cleaned both inside and outside before testing and operating. Compressed air shall not be used to clean equipment. Remove loose packing and flammable materials from inside equipment.
3. Damaged equipment shall be, as determined by the Engineer, placed in first class operating condition or be returned to the source of supply for repair or replacement.
4. Painted surfaces shall be protected with factory installed removable heavy kraft paper, sheet vinyl or equal.

5. Damaged paint on equipment and materials shall be refinished with the same quality of paint and workmanship as used by the manufacturer so repaired areas are not obvious.

1.8 WORK PERFORMANCE

A. All electrical work must comply with the requirements of NFPA 70 (NEC), NFPA 70B, NFPA 70E, OSHA Part 1910 subpart J, OSHA Part 1910 subpart S and OSHA Part 1910 subpart K in addition to other references required by contract.

B. Job site safety and worker safety is the responsibility of the contractor.

C. Electrical work shall be accomplished with all affected circuits or equipment de-energized. When an electrical outage cannot be accomplished in this manner for the required work, the following requirements are mandatory:

1. Electricians must use full protective equipment (i.e., certified and tested insulating material to cover exposed energized electrical components, certified and tested insulated tools, etc.) while working on energized systems in accordance with NFPA 70E.
2. Electricians must wear personal protective equipment while working on energized systems in accordance with NFPA 70E.
3. Before initiating any work, a job specific work plan must be developed by the contractor with a peer review conducted and documented by the Engineer staff. The work plan must include procedures to be used on and near the live electrical equipment, barriers to be installed, safety equipment to be used and exit pathways.
4. Work on energized circuits or equipment cannot begin until prior written approval is obtained from the Engineer.

D. For work on existing facilities, arrange, phase and perform work to assure electrical service for other buildings at all times.

E. New work shall be installed and connected to existing work neatly, safely and professionally.

F. Coordinate location of equipment and conduit with other trades to minimize interferences.

1.9 EQUIPMENT INSTALLATION AND REQUIREMENTS

A. Equipment location shall be as close as practical to locations shown on the drawings.

B. Working spaces shall not be less than specified in the NEC for all voltages specified.

C. Inaccessible Equipment:

1. Where the Engineer determines that the Contractor has installed equipment not conveniently accessible for operation and maintenance, the equipment shall be removed and reinstalled as directed at no additional cost to the Airport.
2. "Conveniently accessible" is defined as being capable of being reached quickly for operation, maintenance, or inspections without the use of ladders, or without climbing or crawling under or over obstacles such as, but not limited to, motors, pumps, belt guards, transformers, piping, ductwork, conduit and raceways.

1.10 EQUIPMENT IDENTIFICATION

A. In addition to the requirements of the NEC, install an identification sign which clearly indicates information required for use and maintenance of items such as switchboards and switchgear, panelboards, cabinets, motor controllers (starters), fused and unfused safety switches, automatic transfer switches, separately enclosed circuit breakers, individual breakers and controllers in switchboards, switchgear and motor control assemblies, control devices and other significant equipment.

B. Nameplates for Normal Power System equipment shall be laminated black phenolic resin with a white core with engraved lettering. Nameplates for Essential Electrical System (EES) equipment, as defined in the NEC, shall be laminated red phenolic resin with a white core with engraved lettering. Lettering shall be a minimum of 1/2 inch [12mm] high. Nameplates shall indicate equipment designation, rated bus amperage, voltage, number of phases, number of wires, and type of EES power branch as applicable. Secure nameplates with screws.

C. Install adhesive arc flash warning labels on all equipment as required by NFPA 70E. Label shall indicate the arc hazard boundary (inches), working distance (inches), arc flash incident energy at the working distance (calories/cm2), required PPE category and description including the glove rating, voltage rating of the equipment, limited approach distance (inches), restricted approach distance (inches), prohibited approach distance (inches), equipment/bus name, date prepared, and manufacturer name and address.

1.11 SUBMITTALS

A. The Engineer’s approval shall be obtained for all equipment and material before delivery to the job site. Delivery, storage or installation of equipment or material which has not had prior approval will not be permitted at the job site.

B. All submittals shall include adequate descriptive literature, catalog cuts, shop drawings and other data necessary for the Engineer to ascertain that the proposed equipment and materials comply with specification requirements. Catalog cuts submitted for approval shall be legible and clearly identify equipment being submitted.

C. Submittals for individual systems and equipment assemblies which consist of more than one item or component shall be made for the system or assembly as a whole. Partial submittals will not be considered for approval.

1. Mark the submittals, "SUBMITTED UNDER SECTION_____".
2. Submittals shall be marked to show specification reference including the section and paragraph numbers.
3. Submit each section separately.

D. The submittals shall include the following:

1. Information that confirms compliance with contract requirements. Include the manufacturer's name, model or catalog numbers, catalog information, technical data sheets, shop drawings, pictures, nameplate data and test reports as required.

2. Elementary and interconnection wiring diagrams for communication and signal systems, control systems and equipment assemblies. All terminal points and wiring shall be identified on wiring diagrams.
3. Parts list which shall include those replacement parts recommended by the equipment manufacturer.

E. Manuals:

1. Maintenance and Operation Manuals: Submit as required for systems and equipment specified in the technical sections. Furnish four copies, bound in hardback binders, (manufacturer's standard binders) or an approved equivalent. Furnish one complete manual as specified in the technical section but in no case later than prior to performance of systems or equipment test, and furnish the remaining manuals prior to contract completion.
2. Inscribe the following identification on the cover: the words "MAINTENANCE AND OPERATION MANUAL," the name and location of the system, equipment, building, name of Contractor, and contract number. Include in the manual the names, addresses, and telephone numbers of each subcontractor installing the system or equipment and the local representatives for the system or equipment.
3. Provide a "Table of Contents" and assemble the manual to conform to the table of contents, with tab sheets placed before instructions covering the subject. The instructions shall be legible and easily read, with large sheets of drawings folded in.
4. The manuals shall include:
    a. Internal and interconnecting wiring and control diagrams with data to explain detailed operation and control of the equipment.
    b. A control sequence describing start-up, operation, and shutdown.
    c. Description of the function of each principal item of equipment.
    d. Installation instructions.
    e. Safety precautions for operation and maintenance.
    f. Diagrams and illustrations.
    g. Periodic maintenance and testing procedures and frequencies, including replacement parts numbers and replacement frequencies.
    h. Performance data.
    i. Pictorial "exploded" parts list with part numbers. Emphasis shall be placed on the use of special tools and instruments. The list shall indicate sources of supply, recommended spare parts, and name of servicing organization.
    j. List of factory approved or qualified permanent servicing organizations for equipment repair and periodic testing and maintenance, including addresses and factory certification qualifications.

F. Approvals will be based on complete submission of manuals together with shop drawings.

1.12 SINGULAR NUMBER

Where any device or part of equipment is referred to in these specifications in the singular number (e.g., "the switch"), this reference shall be deemed to apply to as many such devices as are required to complete the installation as shown on the drawings.

1.13 ACCEPTANCE CHECKS AND TESTS

The contractor shall furnish the instruments, materials and labor for field tests.

1.14 TRAINING

A. Training shall be provided for the particular equipment or system as required in each associated specification.

B. A training schedule shall be developed and submitted by the contractor and approved by the Engineer at least 30 days prior to the planned training.

END OF SECTION 26 05 11

Item L-26 05 21

LOW-VOLTAGE ELECTRICAL POWER CONDUCTORS AND CABLES (600 VOLTS AND BELOW)

PART 1 - GENERAL

1.1 DESCRIPTION

This section specifies the furnishing, installation, and connection of the low voltage power and lighting wiring.

1.2 RELATED WORK

A. Section 26 05 11, REQUIREMENTS FOR ELECTRICAL INSTALLATIONS: General electrical requirements that are common to more than one section.

B. Section 26 05 26, GROUNDING AND BONDING FOR ELECTRICAL SYSTEMS: Requirements for personnel safety and to provide a low impedance path for possible ground fault currents.

C. Section 26 05 41, UNDERGROUND ELECTRICAL CONSTRUCTION: Installation of low-voltage conductors and cables in manholes and ducts.

1.3 QUALITY ASSURANCE

Refer to Paragraph, QUALIFICATIONS, in Section 26 05 11, REQUIREMENTS FOR ELECTRICAL INSTALLATIONS.

1.4 FACTORY TESTS

Low voltage cables shall be thoroughly tested at the factory per NEMA WC-70 to ensure that there are no electrical defects. Factory tests shall be certified.

1.5 SUBMITTALS

In accordance with Section 26 05 11, REQUIREMENTS FOR ELECTRICAL INSTALLATIONS, submit the following:

1. Manufacturer's Literature and Data: Showing each cable type and rating.
2. Certifications: Two weeks prior to the final inspection, submit four copies of the following certifications to the Engineer:
    a. Certification by the manufacturer that the materials conform to the requirements of the drawings and specifications.
    b. Certification by the contractor that the materials have been properly installed, connected, and tested.

1.6 APPLICABLE PUBLICATIONS

A. Publications listed below (including amendments, addenda, revisions, supplements and errata) form a part of this specification to the extent referenced. Publications are reference in the text by designation only.

B. American Society of Testing Material (ASTM):

D2301-04	Standard Specification for Vinyl Chloride Plastic Pressure-Sensitive Electrical Insulating Tape

C. National Fire Protection Association (NFPA):

70-08	National Electrical Code (NEC)

D. National Electrical Manufacturers Association (NEMA):

WC 70-09	Power Cables Rated 2000 Volts or Less for the Distribution of Electrical Energy

E. Underwriters Laboratories, Inc. (UL):

44-05	Thermoset-Insulated Wires and Cables
83-08	Thermoplastic-Insulated Wires and Cables
467-071	Electrical Grounding and Bonding Equipment
486A-486B-03	Wire Connectors
486C-04	Splicing Wire Connectors
486D-05	Sealed Wire Connector Systems
486E-94	Equipment Wiring Terminals for Use with Aluminum and/or Copper Conductors
493-07	Thermoplastic-Insulated Underground Feeder and Branch Circuit Cable
514B-04	Conduit, Tubing, and Cable Fittings
1479-03	Fire Tests of Through-Penetration Fire Stops

PART 2 - PRODUCTS

2.1 CONDUCTORS AND CABLES

A. Conductors and cables shall be in accordance with NEMA WC-70 and as specified herein.

B. Single Conductor:

1. Shall be annealed copper.
2. Shall be stranded for sizes No. 8 AWG and larger, solid for sizes No. 10 AWG and smaller.
3. Shall be minimum size No. 12 AWG, except where smaller sizes are allowed herein.

C. Insulation:

1. XHHW-2 or THHN-THWN shall be in accordance with NEMA WC-70, UL 44, and UL 83.

D. Color Code:

1. Secondary service feeder and branch circuit conductors shall be color-coded as follows:

208/120 volt	Phase	480/277 volt
Black	A	Brown
Red	B	Orange
Blue	C	Yellow
White	Neutral	Gray *
* or white with colored (other than green) tracer.		

   a. Lighting circuit “switch legs” and 3-way switch “traveling wires” shall have color coding that is unique and distinct (e.g., pink and purple) from the color coding indicated above. The unique color codes shall be solid and in accordance with the NEC. Coordinate color coding in the field with the Engineer.
2. Use solid color insulation or solid color coating for No. 12 AWG and No. 10 AWG branch circuit phase, neutral, and ground conductors.
3. Conductors No. 8 AWG and larger shall be color-coded using one of the following methods:
   a. Solid color insulation or solid color coating.
   b. Stripes, bands, or hash marks of color specified above.
   c. Color as specified using 0.75 in [19 mm] wide tape. Apply tape in half-overlapping turns for a minimum of 3 in [75 mm] for terminal points, and in junction boxes, pull-boxes, troughs, and manholes. Apply the last two laps of tape with no tension to prevent possible unwinding. Where cable markings are covered by tape, apply tags to cable, stating size and insulation type.
4. For modifications and additions to existing wiring systems, color coding shall conform to the existing wiring system.

2.2 SPLICES AND JOINTS

A. In accordance with UL 486A, C, D, E, and NEC.

B. Aboveground Circuits (No. 10 AWG and smaller):

1. Connectors: Solderless, screw-on, reusable pressure cable type, rated 600 V, 220˚ F [105˚ C], with integral insulation, approved for copper and aluminum conductors.
2. The integral insulator shall have a skirt to completely cover the stripped wires.
3. The number, size, and combination of conductors, as listed on the manufacturer's packaging, shall be strictly followed.

C. Aboveground Circuits (No. 8 AWG and larger):

1. Connectors shall be indent, hex screw, or bolt clamp-type of high conductivity and corrosion-resistant material, listed for use with copper and aluminum conductors.
2. Field-installed compression connectors for cable sizes 250 KCMIL and larger shall have not fewer than two clamping elements or compression indents per wire.
3. Insulate splices and joints with materials approved for the particular use, location, voltage, and temperature. Splice and joint insulation level shall be not less than the insulation level of the conductors being joined.

4. Plastic electrical insulating tape: Per ASTM D2304, flame-retardant, cold and weather resistant.

D. Underground Branch Circuits and Feeders:

1. Submersible connectors in accordance with UL 486D, rated 600 V, 190˚ F [90˚ C], with integral insulation.

2.3 CONTROL WIRING

A. Unless otherwise specified elsewhere in these specifications, control wiring shall be as specified for power and lighting wiring, except that the minimum size shall be not less than No. 14 AWG.

B. Control wiring shall be large enough such that the voltage drop under in-rush conditions does not adversely affect operation of the controls.

2.4 WIRE LUBRICATING COMPOUND

A. Lubricating compound shall be suitable for the wire insulation and conduit, and shall not harden or become adhesive.

PART 3 - EXECUTION

3.1 GENERAL

A. Install in accordance with the NEC, and as specified.

B. Install all wiring in raceway systems.

C. Splice cables and wires only in outlet boxes, junction boxes, pull-boxes, manholes, or handholes.

D. Wires of different systems (e.g., 120 V, 277 V) shall not be installed in the same conduit or junction box system.

E. Install cable supports for all vertical feeders in accordance with the NEC. Provide split wedge type which firmly clamps each individual cable and tightens due to cable weight.

F. For panel boards, cabinets, wireways, switches, and equipment assemblies, neatly form, train, and tie the cables in individual circuits.

G. Seal cable and wire entering a building from underground between the wire and conduit where the cable exits the conduit, with a non-hardening approved compound.

H. Wire Pulling:

1. Provide installation equipment that will prevent the cutting or abrasion of insulation during pulling of cables. Use lubricants approved for the cable.

2. Use nonmetallic ropes for pulling feeders.
3. Attach pulling lines for feeders by means of either woven basket grips or pulling eyes attached directly to the conductors, as approved by the Engineer.
4. All cables in a single conduit shall be pulled simultaneously.
5. Do not exceed manufacturer's recommended maximum pulling tensions and sidewall pressure values.

I. No more than three single-phase branch circuits shall be installed in any one conduit.

3.2 INSTALLATION IN MANHOLES

A. Install and support cables in manholes on the steel racks with porcelain or equivalent insulators. Train the cables around the manhole walls, but do not bend to a radius less than six times the overall cable diameter.

3.3 SPLICE INSTALLATION

A. Splices and terminations shall be mechanically and electrically secure.

B. Tighten electrical connectors and terminals according to manufacturer's published torque values.

C. Where the Engineer determines that unsatisfactory splices or terminations have been installed, remove the devices and install approved devices at no additional cost to the County.

3.4 FEEDER IDENTIFICATION

A. In each interior pull-box and junction box, install metal tags on all circuit cables and wires to clearly designate their circuit identification and voltage. The tags shall be the embossed brass type, 1.5 in [40 mm] in diameter and 40 mils thick. Attach tags with plastic ties.

B. In each manhole and handhole, provide tags of the embossed brass type, showing the circuit identification and voltage. The tags shall be the embossed brass type, 1.5 in [40 mm] in diameter and 40 mils thick. Attach tags with plastic ties.

3.5 EXISTING WIRING

Unless specifically indicated on the plans, existing wiring shall not be reused for a new installation.

3.6 CONTROL AND SIGNAL WIRING INSTALLATION

A. Unless otherwise specified in other sections, install wiring and connect to equipment/devices to perform the required functions as shown and specified.

B. Except where otherwise required, install a separate power supply circuit for each system so that malfunctions in any system will not affect other systems.

C. Where separate power supply circuits are not shown, connect the systems to the nearest panel boards of suitable voltages, which are intended to supply such systems and have suitable spare circuit breakers or space for installation.

3.7 CONTROL AND SIGNAL SYSTEM wiring IDENTIFICATION

A. Install a permanent wire marker on each wire at each termination.

B. Identifying numbers and letters on the wire markers shall correspond to those on the wiring diagrams used for installing the systems.

C. Wire markers shall retain their markings after cleaning.

D. In each manhole and handhole, install embossed brass tags to identify the system served and function.

3.8 ACCEPTANCE CHECKS AND TESTS

A. Feeders and branch circuits shall have their insulation tested after installation and before connection to utilization devices, such as fixtures, motors, or appliances. Test each conductor with respect to adjacent conductors and to ground. Existing conductors to be reused shall also be tested.

B. Applied voltage shall be 500VDC for 300-volt rated cable, and 1000VDC for 600-volt rated cable. Apply test for one minute or until reading is constant for 15 seconds, whichever is longer. Minimum insulation resistance values shall not be less than 25 megohms for 300-volt rated cable and 100 megohms for 600-volt rated cable.

C. Perform phase rotation test on all three-phase circuits.

D. The contractor shall furnish the instruments, materials, and labor for all tests.

3.9 METHOD OF MEASUREMENT

Panelboard modifications shall be measured by lump sum for the completion of all work to include all new circuit breakers, terminations, panel schedule revisions, enclosure modifications, and other work necessary for a complete and functional system.

GSE Rack & Power Center shall be measured by lump sum for the completion of all foundations, support structure, grounding, and equipment installation, including testing and acceptance by the Engineer

Cable shall be measured by the number of linear feet installed, tested and accepted as satisfactory.

3.10 BASIS OF PAYMENT

Payment will be made for the contract unit price for installation of cables in conduit, tray, or wireway, in place by the Contractor and accepted by the Engineer. The price shall be full compensation for

furnishing all materials and for all preparation and installation of these materials, and for all labor, equipment, tools and incidentals, including ground rods and ground connectors necessary to complete this item.

Payment will be made under:

Item L-260521-1	Panelboard Modifications – per lump sum
Item L-260521-2	GSE Rack & Power Center – per lump sum
Item L-260521-3	Fiber Optic Cable – per linear foot
Item L-260521-4	Cat-6 Cable – per linear foot
Item L-260521-5	2-#12 AWG THWN-2, w/G – per linear foot
Item L-260521-6	2-#10 AWG THWN-2, w/G – per linear foot
Item L-260521-7	#10 AWG GND – per linear foot
Item L-260521-8	#6 AWG THWN-2 – per linear foot
Item L-260521-9	#2 AWG THWN-2 – per linear foot
Item L-260521-10	#2 AWG GND– per linear foot
Item L-260521-11	#1 AWG THWN-2 – per linear foot
Item L-260521-12	#1 AWG GND – per linear foot

END OF SECTION 26 05 21

Item L-26 05 26

GROUNDING AND BONDING FOR ELECTRICAL SYSTEMS

PART 1 - GENERAL

1.1 DESCRIPTION

A. This section specifies the general grounding and bonding requirements for electrical equipment and operations to provide a low impedance path for possible ground fault currents.

B. “Grounding electrode system” refers to all electrodes required by NEC, as well as made, supplementary, and lightning protection system grounding electrodes.

C. The terms “connect” and “bond” are used interchangeably in this specification and have the same meaning.

1.2 RELATED WORK

A. Section 26 05 11, REQUIREMENTS FOR ELECTRICAL INSTALLATIONS: General electrical requirements and items that are common to more than one section of Division 26.

B. Section 26 05 21, LOW-VOLTAGE ELECTRICAL POWER CONDUCTORS AND CABLES (600 VOLTS AND BELOW): Low Voltage power and lighting wiring.

1.3 QUALITY ASSURANCE

Refer to Paragraph, QUALIFICATIONS, in Section 26 05 11, REQUIREMENTS FOR ELECTRICAL INSTALLATIONS.

1.4 SUBMITTALS

A. Submit in accordance with Section 26 05 11, REQUIREMENTS FOR ELECTRICAL INSTALLATIONS.

B. Shop Drawings:

1. Clearly present enough information to determine compliance with drawings and specifications.
2. Include the location of system grounding electrode connections and the routing of aboveground and underground grounding electrode conductors.

C. Test Reports: Provide certified test reports of ground resistance.

D. Certifications: Two weeks prior to final inspection, submit four copies of the following to the Engineer:

1. Certification that the materials and installation are in accordance with the drawings and specifications.
2. Certification by the contractor that the complete installation has been properly installed and tested.

1.5 APPLICABLE PUBLICATIONS

Publications listed below (including amendments, addenda, revisions, supplements, and errata) form a part of this specification to the extent referenced. Publications are referenced in the text by designation only.

A. American Society for Testing and Materials (ASTM):

B1-07	Standard Specification for Hard-Drawn Copper Wire
B3-07	Standard Specification for Soft or Annealed Copper Wire
B8-04	Standard Specification for Concentric-Lay-Stranded Copper Conductors, Hard, Medium-Hard, or Soft

B. Institute of Electrical and Electronics Engineers, Inc. (IEEE):

81-1983	IEEE Guide for Measuring Earth Resistivity, Ground Impedance, and Earth Surface Potentials of a Ground System
C2-07	National Electrical Safety Code

C. National Fire Protection Association (NFPA):

70-08	National Electrical Code (NEC)
99-2005	Health Care Facilities

D. Underwriters Laboratories, Inc. (UL):

44-05	Thermoset-Insulated Wires and Cables
83-08	Thermoplastic-Insulated Wires and Cables
467-07	Grounding and Bonding Equipment
486A-486B-03	Wire Connectors

E. Motorola: R56 Standards and Guidelines for Communication Sites

PART 2 - PRODUCTS

2.1 GROUNDING AND BONDING CONDUCTORS

A. Equipment grounding conductors shall be UL 44 or UL 83 insulated stranded copper, except that sizes No. 10 AWG and smaller shall be solid copper. Insulation color shall be continuous green for all equipment grounding conductors, except that wire sizes No. 4 AWG and larger shall be identified per NEC.

B. Bonding conductors shall be ASTM B8 bare stranded copper, except that sizes No. 10 AWG and smaller shall be ASTM B1 solid bare copper wire.

C. Conductor sizes shall not be less than shown on the drawings, or not less than required by the NEC, whichever is greater.

D. Ground (earth) bus conductors, including ground bus extension conductors, shall be a #2 AWG or larger, green-jacketed, solid or stranded copper conductor. When the conductors are insulated, they shall be listed for the space in which they are intended to be placed and the jacket shall be green or properly marked with a distinctive green color.

A. The equipment grounding (earthing) conductor shall be a #6 AWG or larger, green jacketed, solid or stranded copper conductor

2.2 GROUND RODS

A. Steel or copper clad steel, 0.75 in diameter by 10 ft long, conforming to UL 467.

B. Quantity of rods shall be as required to obtain the specified ground resistance, as shown on the drawings.

2.3 CONCRETE ENCASED ELECTRODE

Concrete encased electrode shall be No. 4 AWG bare copper wire, installed per NEC.

2.4 MEDIUM VOLTAGE SPLICES AND TERMINATIONS

Components shall meet or exceed UL 467 and be clearly marked with the manufacturer, catalog number, and permitted conductor size(s).

2.5 GROUND CONNECTIONS

A. Below Grade: Exothermic-welded type connectors.

B. Above Grade:

1. Bonding Jumpers: Compression-type connectors, using zinc-plated fasteners and external tooth lockwashers.

2. Connection to Building Steel: Exothermic-welded type connectors.
3. Ground Busbars: Two-hole compression type lugs, using tin-plated copper or copper alloy bolts and nuts.
4. Rack and Cabinet Ground Bars: One-hole compression-type lugs, using zinc-plated or copper alloy fasteners.

2.6 EQUIPMENT RACK AND CABINET GROUND BARS

Provide solid copper ground bars designed for mounting on the framework of open or cabinet-enclosed equipment racks with minimum dimensions of 0.375 in thick x 0.75 in wide.

2.7 GROUND TERMINAL BLOCKS

At any equipment mounting location (e.g., backboards and hinged cover enclosures) where rack-type ground bars cannot be mounted, provide screw lug-type terminal blocks.

2.8 GROUNDING BUS

Pre-drilled rectangular copper bar with stand-off insulators, minimum 0.25 in thick x 4 in high in cross-section, length as shown on drawings, with 0.281 in holes spaced 1.125 in apart.

PART 3 - EXECUTION

3.1 GENERAL

A. Ground in accordance with the NEC, as shown on drawings, and as specified herein.

B. System Grounding:

1. Secondary service neutrals: Ground at the supply side of the secondary disconnecting means and at the related transformers.
2. Separately derived systems (transformers downstream from the service entrance): Ground the secondary neutral.

C. Equipment Grounding: Metallic structures, including ductwork and building steel, enclosures, raceways, junction boxes, outlet boxes, cabinets, machine frames, and other conductive items in close proximity with electrical circuits, shall be bonded and grounded.

3.2 INACCESSIBLE GROUNDING CONNECTIONS

Make grounding connections, which are normally buried or otherwise inaccessible (except connections for which access for periodic testing is required), by exothermic weld.

3.3 SECONDARY VOLTAGE EQUIPMENT AND CIRCUITS

A. Main Bonding Jumper: Bond the secondary service neutral to the ground bus in the service equipment.

B. Metallic Piping, Building Steel, and Supplemental Electrode(s):

1. Provide a grounding electrode conductor sized per NEC between the service equipment ground bus and all metallic water pipe systems, building steel, and supplemental or made electrodes. Provide jumper insulating joints in the metallic piping. All connections to electrodes shall be made with fittings that conform to UL 467.
2. Provide a supplemental ground electrode and bond to the grounding electrode system.

C. Service Disconnect (Separate Individual Enclosure): Provide a ground bar bolted to the enclosure with lugs for connecting the various grounding conductors.

D. Switchgear, Panelboards, Engine-Generators, and Automatic Transfer Switches:

1. Connect the various feeder equipment grounding conductors to the ground bus in the enclosure with suitable pressure connectors.
2. For service entrance equipment, connect the grounding electrode conductor to the ground bus.
3. Provide ground bars, bolted to the housing, with sufficient lugs to terminate the equipment grounding conductors.
4. Connect metallic conduits that terminate without mechanical connection to the housing, by grounding bushings and grounding conductor to the equipment ground bus.

E. Transformers:

1. Exterior: Exterior transformers supplying interior service equipment shall have the neutral grounded at the transformer secondary. Provide a grounding electrode at the transformer.
2. Separately derived systems (transformers downstream from service equipment): Ground the secondary neutral at the transformer. Provide a grounding electrode conductor from the transformer to the nearest component of the grounding electrode.

3.4 RACEWAY

F. Conduit Systems:

1. Ground all metallic conduit systems. All metallic conduit systems shall contain an equipment grounding conductor.
2. Non-metallic conduit systems, except non-metallic feeder conduits that carry a grounded conductor from exterior transformers to interior or building-mounted service entrance equipment, shall contain an equipment grounding conductor.
3. Conduit that only contains a grounding conductor, and is provided for its mechanical protection, shall be bonded to that conductor at the entrance and exit from the conduit.
4. Metallic conduits which terminate without mechanical connection to an electrical equipment housing by means of locknut and bushings or adapters, shall be provided with grounding bushings. Connect bushings with a bare grounding conductor to the equipment ground bus.

G. Feeders and Branch Circuits: Install equipment grounding conductors with all feeders and power and lighting branch circuits.

H. Boxes, Cabinets, Enclosures, and Panelboards:

1. Bond the equipment grounding conductor to each pullbox, junction box, outlet box, device box, cabinets, and other enclosures through which the conductor passes (except for special grounding systems for intensive care units and other critical units shown).
2. Provide lugs in each box and enclosure for equipment grounding conductor termination.

I. Wireway Systems:

1. Bond the metallic structures of wireway to provide 100% electrical continuity throughout the wireway system, by connecting a No. 6 AWG bonding jumper at all intermediate metallic enclosures and across all section junctions.
2. Install insulated No. 6 AWG bonding jumpers between the wireway system, bonded as required above, and the closest building ground at each end and approximately every 50 ft.
3. Use insulated No. 6 AWG bonding jumpers to ground or bond metallic wireway at each end for all intermediate metallic enclosures and across all section junctions.
4. Use insulated No. 6 AWG bonding jumpers to ground cable tray to column-mounted building ground plates (pads) at each end and approximately every 49 ft.

J. Receptacles shall not be grounded through their mounting screws. Ground receptacles with a jumper from the receptacle green ground terminal to the device box ground screw and a jumper to the branch circuit equipment grounding conductor.

K. Ground lighting fixtures to the equipment grounding conductor of the wiring system when the green ground is provided; otherwise, ground the fixtures through the conduit systems. Fixtures connected with flexible conduit shall have a green ground wire included with the power wires from the fixture through the flexible conduit to the first outlet box.

L. Fixed electrical appliances and equipment shall be provided with a ground lug for termination of the equipment grounding conductor.

M. Raised Floors: Provide bonding of all raised floor components. See details on the drawings.

3.5 OUTDOOR METALLIC FENCES AROUND ELECTRICAL EQUIPMENT

N. Outdoor Metallic Fences Around Electrical Equipment: Fences shall be grounded with a ground rod at each fixed gate post and at each corner post. Drive ground rods until the top is 12 in below grade. Attach a No. 4 AWG copper conductor by exothermic weld to the ground rods, and extend underground to the immediate vicinity of fence post. Lace the conductor vertically into 12 in of fence mesh and fasten by two approved bronze compression fittings, one to bond the wire to post and the other to bond the wire to fence. Each gate section shall be bonded to its gatepost by a 0.375 in x 1 in flexible, braided copper strap and ground post clamps. Clamps shall be of the anti-electrolysis type.

3.6 CORROSION INHIBITORS

When making ground and ground bonding connections, apply a corrosion inhibitor to all contact surfaces. Use corrosion inhibitor appropriate for protecting a connection between the metals used.

3.7 CONDUCTIVE PIPING

A. Bond all conductive piping systems, interior and exterior, to the grounding electrode system. Bonding connections shall be made as close as practical to the equipment ground bus.

B. In operating rooms and at intensive care and coronary care type beds, bond the gases and suction piping at the outlets directly to the room or patient ground bus.

3.8 LIGHTNING PROTECTION SYSTEM

Bond the lightning protection system to the electrical grounding electrode system.

3.9 ELECTRICAL ROOM GROUNDING

Building Earth Ground Busbars: Provide ground busbar and mounting hardware at each electrical room and connect to pigtail extensions of the building grounding ring.

3.10 EXTERIOR LIGHT POLES

Provide 20 ft of No. 4 bare copper coiled at bottom of pole base excavation prior to pour, plus additional unspliced length in and above foundation as required to reach pole ground stud.

3.11 GROUND RESISTANCE

A. Grounding system resistance to ground shall not exceed 25 ohms. Make any modifications or additions to the grounding electrode system necessary for compliance without additional cost to the County. Final tests shall ensure that this requirement is met.

B. Resistance of the grounding electrode system shall be measured using a four-terminal fall-of-potential method as defined in IEEE 81. Ground resistance measurements shall be made before the electrical distribution system is energized and shall be made in normally dry conditions not fewer than 48 hours after the last rainfall. Resistance measurements of separate grounding electrode systems shall be made before the systems are bonded together below grade. The combined resistance of separate systems may be used to meet the required resistance, but the specified number of electrodes must still be provided.

C. Services at power company interface points shall comply with the power company ground resistance requirements.

D. Below-grade connections shall be visually inspected by the Engineer prior to backfilling. The contractor shall notify the Engineer 24 hours before the connections are ready for inspection.

3.12 GROUND ROD INSTALLATION

A. For outdoor installations, drive each rod vertically in the earth, until top of rod is 24 in [609 mm] below final grade.

B. For indoor installations, leave 4 in of rod exposed.

C. Where permanently concealed ground connections are required, make the connections by the exothermic process, to form solid metal joints. Make accessible ground connections with mechanical pressure-type ground connectors.

D. Where rock prevents the driving of vertical ground rods, install angled ground rods or grounding electrodes in horizontal trenches to achieve the specified resistance.

END OF SECTION 26 05 26

Item L-26 05 41

UNDERGROUND ELECTRICAL CONSTRUCTION

PART 1 – GENERAL

1.1. DESCRIPTION

A. This section specifies the furnishing, installation and connection of handholes and ducts to form a complete underground raceway system.

B. "Duct" and "conduit", and "rigid metal conduit" and "rigid steel conduit are used interchangeably in this specification and have the same meaning.

1.2. RELATED WORK

A. Section 26 05 11, REQUIREMENTS FOR ELECTRICAL INSTALLATIONS: General electrical requirements and items that are common to more than one section of Division 26.

B. Section 26 05 26, GROUNDING AND BONDING FOR ELECTRICAL SYSTEMS: Requirements for personnel safety and to provide a low impedance path for possible ground fault currents.

1.3. SUBMITTALS

A. Submit in accordance with Section 26 05 11, REQUIREMENTS FOR ELECTRICAL INSTALLATIONS.

B. Shop Drawings:

1. Sufficient information, clearly presented, shall be included to determine compliance with drawings and specifications.
2. Include handholes, duct materials, and hardware. Proposed deviations from details on the drawings shall be clearly marked on the submittals.
3. If necessary to locate ducts or handholes at locations other than shown on the drawings, show the proposed locations accurately on scaled site drawings, and submit four copies to the Resident Project Engineer for approval prior to construction.

C. Certifications: Two weeks prior to final inspection, submit four copies of the following to the Resident Project Engineer:

1. Certification that the materials are in accordance with the drawings and specifications.
2. Certification, by the Contractor, that the complete installation has been properly installed and tested.

1.4. APPLICABLE PUBLICATIONS

Publications listed below (including amendments, addenda, revisions, supplements, and errata) form a part of this specification to the extent referenced. Publications are referenced in the text by the basic designation only.

A. American Concrete Institute (ACI):

Building Code Requirements for Structural Concrete

318/318M-2005 ..... Building Code Requirements for Structural Concrete & Commentary

SP-66-04 ..... ACI Detailing Manual

B. American Society for Testing and Materials (ASTM):

C478/C478M 2009(b)..... Standard Specification for Precast Reinforced Concrete Manhole Sections

C990 REV A 2008 ..... Standard Specification for joints concrete pipe, Manholes and Precast Box using performed flexible Joint sealants.

C. Institute of Electrical and Electronic Engineers (IEEE):

C2-2002 ..... National Electrical Safety Code

D. National Electrical Manufacturers Association (NEMA):

RNI 2005..... Polyvinyl Chloride (PVC) Externally Coated Galvanized Rigid Steel Conduit and Intermediate Metal Conduit

TC 2 2003 ..... Electrical Polyvinyl Chloride (PVC) Tubing And Conduit

TC 3-2004..... PVC Fittings for Use With Rigid PVC Conduit And Tubing

TC 6 & 8 2003 ..... PVC Plastic Utilities Duct For Underground Installations

TC 9-2004..... Fittings For PVC Plastic Utilities Duct For Underground Installation

E. National Fire Protection Association (NFPA):

70 2008 ..... National Electrical Code (NEC)

F. Underwriters Laboratories, Inc. (UL):

6-2007 ..... Electrical Rigid Metal Conduit-Steel

467-2007 ..... Standard for Grounding and Bonding Equipment

651-2005 ..... Standard for Schedule 40 and 80 Rigid PVC Conduit and Fittings

651A-2000 ..... Type EB and A Rigid PVC Conduit and HDPE Conduit, (RTRC)

651B-2007 .....Continuous Length HDPE Conduit

G. U.S. General Services Administration (GSA):

SS-S-210A-1981.....Sealing Compound, Preformed Plastic for Expansion joints And Pipe Joints

PART 2 - PRODUCTS

2.1. DUCTS

A. Number and sizes shall be as shown on drawings.

B. Ducts (concrete encased):

1. Plastic Duct:
   a. UL 651 and 651A Schedule 40 PVC.
   b. Duct shall be suitable for use with 90 degree C rated conductors.
2. Conduit Spacers: Prefabricated plastic.

C. Ducts (direct burial):

1. Plastic duct:
   a. NEMA TC2 and TC3
   b. UL 651, 651A and 651B, Schedule 40, Schedule 80 PVC or HDPE.
   c. Duct shall be suitable for use with 75 degree C rated conductors.
2. Rigid metal conduit, PVC-coated: UL6 and NEMA RN1 galvanized rigid steel, threaded type, coated with PVC sheath bonded to the galvanized exterior surface, nominal 1 mm (0.040 inch) thick.

2.2. GROUNDING

A. Rods: Per Section 26 05 26, GROUNDING AND BONDING FOR ELECTRICAL SYSTEMS and UL 467

B. Ground Wire: Stranded bare copper 16 mm² (6 AWG) minimum.

2.3. WARNING TAPE:

A. Standard 4-mil polyethylene 76 mm (3 inch) wide tape, detectable type, red with black letters, imprinted with “CAUTION BURIED ELECTRIC CABLE BELOW”.

2.4. PULL ROPE:

A. Plastic with 890N (200 pound) minimum tensile strength.

PART 3 - EXECUTION

3.1. HANDHOLE CONSTRUCTION AND INSTALLATION

A. General Requirements:

1. Locate handholes at the approximate locations shown on the drawings with due consideration given to the location of other utilities, grades, and paving.

B. Access for Handholes: Make the top of frames and covers flush with finished grade.

3.2. TRENCHING

A. Work with extreme care near existing ducts, conduits, cables, and other utilities to avoid damaging them.

B. Cut the trenches neatly and uniformly.

C. For Concrete Encased Ducts:

1. After excavation of the trench, stakes shall be driven in the bottom of the trench at
2. 1200 mm (4 foot) intervals to establish the grade and route of the duct bank.
3. Pitch the trenches uniformly towards manholes or both ways from high points between manholes for the required duct line drainage. Avoid pitching the ducts towards buildings wherever possible.
4. The walls of the trench may be used to form the side walls of the duct bank provided that the soil is self-supporting and that concrete envelope can be poured without soil inclusions. Forms are required where the soil is not self-supporting.
5. After the concrete encased duct has sufficiently cured, the trench shall be backfilled to grade with earth, with appropriate warning tape attached.

D. Conduits to be installed under existing paved areas, roads, and railroad tracks that are not to be disturbed shall be jacked into place. Conduits shall be PVC-coated rigid metal.

3.3. DUCT INSTALLATION

A. General Requirements:

1. Ducts shall be in accordance with the NEC and IEEE C2, as shown on the drawings and as specified.
2. Slope ducts to drain towards handholes, and away from building and equipment entrances. Pitch not less than 100 mm (4 inches) in 30 M (100 feet).
3. Underground conduit stub-ups and sweeps to equipment inside of buildings shall be PVC-coated galvanized rigid steel, and shall extend a minimum of 1500 mm (5 feet) outside of building foundation.
4. Stub-ups, sweeps, and risers to equipment mounted on outdoor concrete slabs shall be PVC-coated galvanized rigid steel, and shall extend a minimum of 1500 mm (5 feet) away from edge of slab.
5. Install insulated grounding bushings on the terminations.
6. PVC-coated rigid steel conduits shall be coupled to the ducts with suitable adapters, and the whole encased with 75 mm (3 inches) of concrete.

7. PVC coated rigid steel conduit turns of direction for all duct lines shall have minimum 1200 mm (4 feet) radius in the horizontal and vertical directions. PVC conduit sweeps for all duct lines shall have a minimum 12000 mm (40 feet) radius in the horizontal and 1200 mm (4 feet) in the vertical directions. Where a 12000 mm (40 feet) radius is not possible, horizontal turns of direction shall be rigid steel.
8. All multiple conduit runs shall have conduit spacers. Spacers shall securely support and maintain uniform spacing of the duct assembly a minimum of 75 mm (3 inches) above bottom of trench during the concrete pour. Spacer spacing shall not exceed 1500 mm (5 feet).
9. Duct lines shall be installed no less than 300 mm (12 inches) from other utility systems, such as water, sewer, and chilled water.
10. Clearances between individual ducts:
    a. For like services, not less than 75 mm (3 inches).
    b. For power and signal services, not less than 150 mm (6 inches).
    c. Provide plastic spacers to maintain clearances.
    d. Provide nonferrous tie wires to prevent displacement of the ducts during pouring of concrete. Tie wires shall not act as substitute for spacers.
11. Duct lines shall terminate as shown on the drawings. All ducts shall be fitted with end bells.
12. Couple the ducts with proper couplings. Stagger couplings in rows and layers to insure maximum strength and rigidity of the duct bank.
13. Keep ducts clean of earth, sand, or gravel during construction, and seal with tapered plugs upon completion of each portion of the work.
14. Duct Bank Markers:
    a. Duct bank markers, where required, shall be located at the ends of duct banks except at handholes at approximately every 60 meter (200 feet) along the duct run and at each change in direction of the duct run. Markers shall be placed 600 mm (2 feet) to the right of the duct bank, facing the longitudinal axis of the run in the direction of the electrical load.
    b. The letter ”D” with two arrows shall be impressed or cast on top of the marker. One arrow shall be located below the letter and shall point toward the ducts. Second arrow shall be located adjacent to the letter and shall point in a direction parallel to the ducts. The letter and arrow adjacent to it shall each be approximately 75 mm (2 inches) long. The letter and arrows shall be V-shaped, and shall have a width of stroke at least 6 mm (1/4 inch) at the top and a depth of 6 mm (1/4 inch).

c. In paved areas, the top of the duct markers shall be flush with the finished
1. surface of the paving.
d. Where the duct bank changes direction, the arrow located adjacent to the letter shall be cast or impressed with an angle in the arrow the same as the angular change of the duct bank.

B. Direct Burial Duct and Conduits:
1. Install direct burial ducts and conduits only where shown on the drawings. Provide direct burial ducts only for low voltage systems.
2. Join and terminate ducts and conduits with fittings recommended by conduit manufacturer.
3. Direct burial ducts and conduits are prohibited under railroad tracks.
4. Tops of ducts and conduits shall be:
a. Not less than 600 mm (24 inches) and not less than shown on the drawings, below finished grade.
b. Not less than 750 mm (30 inches) and not less than shown on the drawings, below roads and other paved surfaces.
5. Do not kink the ducts or conduits.

C. Concrete-Encased and Direct Burial Duct and Conduit Identification: Place continuous strip of warning tape approximately 300 mm (12 inches) above ducts or conduits before backfilling trenches. Warning tape shall be preprinted with proper identification.

D. Spare Ducts and Conduits: Where spare ducts are shown, they shall have a nylon pull rope installed. They shall be capped at each end and labeled as to location of the other end.

E. Duct and Conduit Cleaning:
1. Upon completion of the duct bank installation or installation of direct buried ducts, a standard flexible mandrel shall be pulled through each duct to loosen particles of earth, sand, or foreign material left in the line. The mandrel shall be not less than 3600 mm (12 inches) long, and shall have a diameter not less than 13 mm (1/2 inch) less than the inside diameter of the duct. A brush with stiff bristles shall then be pulled through each duct to remove the loosened particles. The diameter of the brush shall be the same as, or slightly larger than the diameter of the duct.
2. Mandrel pulls shall be witnessed by the Resident Project Engineer.

F. Duct and Conduit Sealing: Seal the ducts and conduits at building entrances, and at outdoor terminations for equipment, with a suitable non-hardening compound to prevent the entrance of moisture and gases.

G. Connections to Existing Manholes: For duct bank connections to existing structures, break the structure wall out to the dimensions required and preserve steel in the structure wall. Cut steel and extend into the duct bank envelope. Chip the perimeter surface of the duct bank opening to form a key or flared surface, providing a positive connection with the duct bank envelope.

H. Connections to Existing Ducts: Where connections to existing duct banks are indicated, excavate around the duct banks as necessary. Cut off the duct banks and remove loose concrete from the conduits before installing new concrete-encased ducts. Provide a reinforced concrete collar, poured monolithically with the new duct bank, to take the shear at the joint of the duct banks.

I. Partially Completed Duct Banks: During construction wherever a construction joint is necessary in a duct bank, prevent debris such as mud and dirt from entering ducts by providing suitable conduit plugs. Fit concrete envelope of a partially completed duct bank with reinforcing steel extending a minimum of 600 mm (2 feet) back into the envelope and a minimum of 600 mm (2 feet) beyond the end of the envelope. Provide one No. 4 bar in each corner, 75 mm (3 inches) from the edge of the envelope. Secure corner bars with two No. 3 ties, spaced approximately 300 mm (1 foot) apart. Restrain reinforcing assembly from moving during pouring of concrete.

PART 4 – METHOD OF MEASUREMENT

Conduit installation shall be measured per linear foot for equipment installed in a structure, direct buried, or encased in concrete as indicated. Installation shall include excavation, conduit, backfill, compaction and turf repair.

PART 5 – BASIS OF PAYMENT

Payment will be made for the contract unit price for the installation of conduits installed, inspected and accepted by the Engineer. The price shall be full compensation for all labor, equipment, tools and incidentals to complete this item.

Payment will be made under:

Item L-260541-1	3/4” PVC in Canopy Structure – per linear foot
Item L-260541-2	1” PVC Concrete-Encased Under Pavement – per linear foot
Item L-260541-3	1” PVC Direct Bury in Soil – per linear foot
Item L-260541-4	2” PVC Direct Bury in Soil – per linear foot

Item L-260541-5	2-1/2” PVC Direct Bury in Soil – per linear foot
Item L-260541-5	13”x24” Handholes – per each
Item L-260541-6	12”x12” Handholes – per each

END OF SECTION 26 05 47

ITEM L-26 56 00
EXTERIOR LIGHTING

PART 1 – GENERAL

1.1. DESCRIPTION

This section specifies the furnishing, installation, and connection of exterior fixtures, poles, and supports. The terms “lighting fixtures”, “fixture” and “luminaire” are used interchangeably.

1.2. RELATED WORK

A. Section 26 05 11, REQUIREMENTS FOR ELECTRICAL INSTALLATIONS: General electrical requirements and items that are common to more than one section of Division 26.
B. Section 26 05 19, LOW-VOLTAGE ELECTRICAL POWER CONDUCTORS AND CABLES (600 VOLTS AND BELOW): Low voltage power and lighting wiring.
C. Section 26 05 26, GROUNDING AND BONDING FOR ELECTRICAL SYSTEMS: Requirements for personnel safety and to provide a low impedance path for
D. Section 26 05 41, UNDERGROUND ELECTRICAL CONSTRUCTION: Underground handholes and conduits.

1.3. SUBMITTALS

A. Submit six copies of the following in accordance with Section 26 05 11, REQUIREMENTS FOR ELECTRICAL INSTALLATIONS.
    1. Shop Drawings:
        a. Submit the following information for each type of lighting fixture designated on the LIGHTING FIXTURE SCHEDULE, arranged in order of lighting fixture designation.
        b. Material and construction details, include information on housing and optics system.
        c. Physical dimensions and description.
        d. Wiring schematic and connection diagram.
        e. Installation details.
        f. Energy efficiency data.

g. Photometric data based on laboratory tests complying with IES Lighting Measurements testing and calculation guides.

h. Lamp data including lumen output (initial and mean), color rendition index (CRI), rated life (hours), and color temperature (degrees Kelvin).

i. Ballast data including ballast type, starting method, ambient temperature, ballast factor, sound rating, system watts, and total harmonic distortion (THD).

j. For LED lighting fixtures, submit US DOE LED Lighting Facts label, and IES L70 rated life.

k. Submit site plan showing all exterior lighting fixtures with fixture tags consistent with Lighting Fixture Schedule as shown on drawings. Site plan shall show computer generated point–by-point illumination calculations. Include lamp lumen and light loss factors used in calculations.

2. Manuals:

a. Submit, simultaneously with the shop drawings, complete maintenance and operating manuals, including technical data sheets, wiring diagrams, and information for ordering replacement parts.

b. If changes have been made to the maintenance and operating manuals originally submitted, submit updated maintenance and operating manuals two weeks prior to the final inspection.

3. Certifications: Two weeks prior to final inspection, submit the following.

a. Certification by the Contractor that the exterior lighting systems have been properly installed and tested.

1.4. APPLICABLE PUBLICATIONS

A. Publications listed below (including amendments, addenda, revisions, supplements, and errata) form a part of this specification to the extent referenced. Publications are referenced in the text by designation only.

B. Aluminum Association Inc. (AA):

AAH35.1-06.....Alloy and Temper Designation Systems for Aluminum

C. American Association of State Highway and Transportation Officials (AASHTO):

32-LTS-6 ..... Structural Supports for Highway Signs, Luminaires and Traffic Signals

D. American Concrete Institute (ACI):

318-05 ..... Building Code Requirements for Structural Concrete

E. American National Standards Institute (ANSI):

C81.61-09 ..... Electrical Lamp Bases – Specifications for Bases (Caps) for Electric Lamps

F. American Society for Testing and Materials (ASTM):

A123/A123M-12 ..... Zinc (Hot-Dip Galvanized) Coatings on Iron and Steel Products

A153/A153M-09 ..... Zinc Coating (Hot-Dip) on Iron and Steel Hardware

B108-03a-08 ..... Aluminum-Alloy Permanent Mold Castings

C1089-13 ..... Spun Cast Prestressed Concrete Poles

G. Federal Aviation Administration (FAA):

AC 70/7460-IK-07 ..... Obstruction Lighting and Marking

AC 150/5345-43F-06 ..... Obstruction Lighting Equipment

H. Illuminating Engineering Society of North America (IESNA):

HB-9-00 ..... Lighting Handbook

RP-8-05 ..... Roadway Lighting

LM-52-03 ..... Photometric Measurements of Roadway Sign Installations

LM-72-10 ..... Directional Positioning of Photometric Data

LM-79-08 ..... Approved Method for the Electrical and Photometric Measurements of Solid-Sate Lighting Products

LM-80-08 ..... Approved Method for Measuring Lumen Maintenance of LED Light Sources

TM-15-07 ..... Backlight, Uplight and Glare (BUG) Ratings

I. National Electrical Manufacturers Association (NEMA):

C78.41-06 ..... Electric Lamps – Guidelines for Low-Pressure Sodium Lamps

C78.42-07 ..... Electric Lamps – Guidelines for High-Pressure Sodium Lamps

C78.43-07 ..... Electric Lamps – Single-Ended Metal-Halide Lamps

C78.1381-98 ..... Electric Lamps – 70-Watt M85 Double-Ended Metal-Halide Lamps

C82.4-02 ..... Ballasts for High-Intensity-Discharge and Low-Pressure Sodium Lamps (Multiple-Supply Type)

C136.3-05 .....For Roadway and Area Lighting Equipment – Luminaire Attachments

C136.17-05 .....Roadway and Area Lighting Equipment – Enclosed Side-Mounted Luminaires for Horizontal-Burning High-Intensity-Discharge Lamps – Mechanical Interchangeability of Refractors

ICS 2-00 (R2005) .....Controllers, Contactors and Overload Relays Rated 600 Volts

ICS 6-93 (R2006) .....Enclosures

J. National Fire Protection Association (NFPA):

70-11 .....National Electrical Code (NEC)

K. Underwriters Laboratories, Inc. (UL):

496-08 .....Lampholders

773-95 .....Plug-In, Locking Type Photocontrols for Use with Area Lighting

773A-06 .....Nonindustrial Photoelectric Switches for Lighting Control

1029-94 .....High-Intensity-Discharge Lamp Ballasts

1598-08 .....Luminaires

8750-09.....Light Emitting Diode (LED) Equipment for Use in Lighting Products

1.5. DELIVERY, STORAGE, AND HANDLING

Provide manufacturer's standard provisions for protecting pole finishes during transport, storage, and installation. Do not store poles on ground. Store poles so they are at least 305 mm (12 inches) above ground level and growing vegetation. Do not remove factory-applied pole wrappings until just before installing pole.

PART 2 - PRODUCTS

2.1. GENERAL REQUIREMENTS

Luminaires, materials and equipment shall be in accordance with NEC, UL, ANSI, and as shown on the drawings and specified.

2.2. POLES

A. General:

1. Poles shall be as shown on the drawings, and as specified. Finish shall be as specified on the drawings.
2. The pole and arm assembly shall be designed for wind loading of 241 km/hr (150 mph) minimum, as required by wind loading conditions at project site, with an additional 30% gust factor and supporting luminaire(s) and accessories such as shields, banner arms, and banners that have the effective projected areas indicated. The effective projected area of the pole shall be applied at the height of the pole base, as shown on the drawings.
3. Poles shall be embedded type designed for use with underground supply conductors. Poles shall have handhole having a minimum clear opening of 65 x 125 mm (2.5 x 5 inches). Handhole covers shall be secured by stainless steel captive screws.
4. Provide a steel-grounding stud opposite handhole openings, designed to prevent electrolysis when used with copper wire.
5. Provide a base cover that matches the pole in material and color to conceal the mounting hardware pole-base welds and anchor bolts.
6. Hardware and Accessories: All necessary hardware and specified accessories shall be the product of the pole manufacturer.
7. Provide manufacturer's standard finish, as scheduled on the drawings. Where indicated on drawings, provide finishes as indicated in Section 09 09 00, SCHEDULE FOR FINISHES.

B. Types:

1. Aluminum: Provide round aluminum poles manufactured of corrosion-resistant AA AAH35.1 aluminum alloys conforming to AASHTO LTS-4. Poles shall be seamless extruded or spun seamless type.
2. Steel: Provide round steel poles having minimum 11-gauge steel with minimum yield/strength of 48,000 psi and hot-dipped galvanized factory finish. Galvanized steel poles shall comply with ASTM A123 and A153.
3. Concrete: Provide square concrete poles conforming to ASTM C1089 with integral cast bases. Poles shall have hollow core suitable as a raceway.

2.3. FOUNDATIONS FOR POLES

A. Foundations shall be cast-in-place concrete, having 3000 psi minimum 28-day compressive strength.

B. Foundations shall support the effective projected area of the specified pole, arm(s), luminaire(s), and accessories, such as shields, banner arms, and banners, under wind conditions previously specified in this section.

C. Place concrete in spirally-wrapped treated paper forms for round foundations, and construct forms for square foundations.

D. Rub-finish and round all above-grade concrete edges to approximately 6 mm (0.25-inch) radius.

E. Anchor bolt assemblies and reinforcing of concrete foundations shall be as shown on the drawings. Anchor bolts shall be in a welded cage or properly positioned by the tiewire to stirrups.

F. Prior to concrete pour, install electrode per Section 26 05 26, GROUNDING AND BONDING FOR ELECTRICAL SYSTEMS.

2.4. LUMINAIRES

A. Luminaires shall be weatherproof, heavy duty, outdoor types designed for efficient light utilization, adequate dissipation of lamp and ballast heat, and safe cleaning and relamping.

B. Illumination distribution patterns, BUG ratings and cutoff types as defined by the IESNA shall be as shown on the drawings.

C. Incorporate ballasts in the luminaire housing, except where otherwise shown on the drawings.

D. Lenses shall be frame-mounted, heat-resistant, borosilicate glass, with prismatic refractors, unless otherwise shown on the drawings. Attach the frame to the luminaire housing by hinges or chain. Use heat and aging-resistant, resilient gaskets to seal and cushion lenses and refractors in luminaire doors.

E. Lamp sockets for high intensity discharge (H.I.D) fixture shall have locking-type porcelain enclosures in conformance to the applicable requirements of ANSI C81.61-09 and UL 496-08.

F. Pre-wire internal components to terminal strips at the factory.

G. Bracket-mounted luminaires shall have leveling provisions and clamp-type adjustable slip-fitters with locking screws.

H. Materials shall be rustproof. Latches and fittings shall be non-ferrous metal.

I. Provide manufacturer's standard finish, as scheduled on the drawings. Where indicated on drawings, match finish process and color of pole or support materials. Where indicated on drawings, provide finishes as indicated in Section 09 09 00, SCHEDULE FOR FINISHES.

J. Luminaires shall carry factory labels, showing complete, specific lamp and ballast information.

2.5. LAMPS

A. Install the proper lamps in every luminaire installed.

B. Lamps shall be general-service, outdoor lighting types.

C. LED sources shall meet the following requirements:

1. Operating temperature rating shall be between -40 degrees C (-40 degrees F) and 50 degrees C (120 degrees F).
2. Correlated Color Temperature (CCT4000K.
3. Color Rendering Index (CRI): ≥ 85.
4. The manufacturer shall have performed reliability tests on the LEDs luminaires complying with Illuminating Engineering Society (IES) LM79 for photometric performance and LM80 for lumen maintenance and L70 life.

D. Mercury vapor lamps shall not be used.

2.6. LED DRIVERS

A. LED drivers shall meet the following requirements:

1. Drivers shall have a minimum efficiency of 85%.
2. Starting Temperature: -40 degrees C (-40 degrees F).
3. Input Voltage: 120 to 480 (±10%) volt.
4. Power Supplies: Class I or II output.
5. Surge Protection: The system must survive 250 repetitive strikes of “C Low” (C Low: 6kV/1.2 x 50 μs, 10kA/8 x 20 μs) waveforms at 1-minute intervals with less than 10% degradation in clamping voltage. “C Low” waveforms are as defined in IEEE/ASNI C62.41.2-2002, Scenario 1 Location Category C.
6. Power Factor (PF): ≥ 0.90.
7. Total Harmonic Distortion (THD): $\leq 20\%$.
8. Comply with FCC Title 47 CFR Part 18 Non-consumer RFI/EMI Standards.
9. Drivers shall be reduction of hazardous substances (ROHS)-compliant.

2.7. EXISTING LIGHTING SYSTEMS

A. For modifications or additions to existing lighting systems, the new components shall be compatible with the existing systems.
B. New poles and luminaires shall have approximately the same configurations, dimensions, lamping and reflector type as the existing poles and luminaires, except where otherwise shown on the drawings.

PART 3 - EXECUTION

3.1. INSTALLATION

A. Install lighting in accordance with the NEC, as shown on the drawings, and in accordance with manufacturer's recommendations.
B. Pole Foundations:
   1. Excavate only as necessary to provide sufficient working clearance for installation of forms and proper use of tamper to the full depth of the excavation. Prevent surface water from flowing into the excavation. Thoroughly compact backfill with compacting arranged to prevent pressure between conductor, jacket, or sheath, and the end of conduit.
   2. Set anchor bolts according to anchor-bolt templates furnished by the pole manufacturer.
   3. Install poles as necessary to provide a permanent vertical position with the bracket arm in proper position for luminaire location.
   4. After the poles have been installed, shimmed, and plumbed, grout the spaces
   5. between the pole bases and the concrete base with non-shrink concrete grout material. Provide a plastic or copper tube, of not less than 9 mm (0.375-inch) inside diameter through the grout, tight to the top of the concrete base to prevent moisture weeping from the interior of the pole.
C. Install lamps in each luminaire.
D. Adjust luminaires that require field adjustment or aiming.

3.2. GROUNDING

Ground noncurrent-carrying parts of equipment, including metal poles, luminaires, mounting arms, brackets, and metallic enclosures, as specified in Section 26 05 26, GROUNDING AND

BONDING FOR ELECTRICAL SYSTEMS. Where copper grounding conductor is connected to a metal other than copper, provide specially-treated or lined connectors suitable and listed for this purpose.

3.3. ACCEPTANCE CHECKS AND TESTS

Verify operation after installing luminaires and energizing circuits.

3.4. METHOD OF MEASUREMENT

Parking lot poles shall be measured for the complete installation of the foundation, pole, and fixtures. Installation shall include the excavation, foundation, pole, fixture, wire, terminations, backfill, compaction and turf repair.

Wall-mount fixture shall be measured per fixture installed on the facility indicated. Installation shall include device boxes, fasteners, hangers, coupling, terminator, fixtures, lenses, bulbs, LED drivers, and other items as necessary for a fully operational system.

3.5. BASIS OF PAYMENT

Payment will be made for the contract unit price for the installation of the parking lot poles, pole-mounted fixtures, wall-mounted fixtures and foundations. The price shall be full compensation for all labor, equipment, tools and incidentals to complete this item.

Payment will be made under:

Item L-265600-1	Parking Lot Pole, Fixture, and Foundation – per each
Item L-265600-2	Wall-Mount Canopy Lights – per each

END OF SECTION 26 56 00

Item L-33 05 23

DIRECTIONAL BORE

PART 1 – DESCRIPTION

1.1. SCOPE OF WORK: The work specified in this Section documents the approved construction methods, procedures and materials for Directional Boring, also commonly called Horizontal Directional Drilling (HDD).

1.2. GENERAL

General: HDD is a trenchless method for installing a product that serves as a carrier pipe for transporting solids, liquids or gasses (under pressure or gravity flow), or serves as a conduit, casing, or duct for a carrier pipe, cable, or wire line products. It is a multi-stage process consisting of site preparation and restoration, equipment setup, and drilling a pilot bore along a predetermined path and then pulling the product back through the drilled space. When necessary, enlargement of the pilot bore hole may be necessary to accommodate a product larger than the pilot bore hole size. This process is referred to as back reaming and is done at the same time the product is being pulled back through the pilot bore hole.

Accomplish alignment of the bore by proper orientation of the drill bit head as it is being pushed into the ground by a hydraulic jack and determine orientation and tracking of the drill bit. In order to minimize friction and prevent collapse of the bore hole, introduce a soil stabilizing agent (drilling fluid) into the annular bore space from the trailing end of the drill bit.

Select or design drilling fluids for the site specific soil and ground water conditions. Confine free flowing (escaping) slurry or drilling fluids at the ground surface during pull back or drilling. Remove all residual slurry from the surface and restore the site to preconstruction conditions.

PART 2 – MATERIALS

2.1. GENERAL: Materials are defined as carrier pipe or conduit, casing, or duct that becomes the installed product. Incidental materials that may or may not be used to install the product depending on field requirements are not paid for separately and will be included in the cost of the installed product. Plastic pipe sections are to be butt fused. Metal pipe sections are to be butt welded. Restrained joint connectors (external connectors, bell and spigot and any joint that overlaps a portion of the product to be installed) are to be installed according to the manufacturer’s specifications and instructions.

2.2. MATERIAL TYPE: The following material standards are to be interpreted as the minimum in place standards. Use materials that are appropriate for the stresses generated by the selected

equipment and field conditions. It is not intended to portray that the use of materials with these minimum material standards will retain their required properties if the stress limits are exceeded for which they were designed during installation. Ensure that the appropriate material is used to retain compliance once it is installed.

Material Standards for HDD Installation		
Material Type	Non-Pressure	Pressure
Polyethylene	ASTM D 3350 ASTM F 714	ASTM D 2513 ASTM D 3350 ASTM F 714
High Density Polyethylene (HDPE)	ASTM D 3350 ASTM F 714	ASTM D 2513 ASTM D 3350 ASTM F 714
Polyvinyl Chloride (PVC)	ASTM D 4396 ASTM D 1784	ASTM D 1784 AWWA C 900 AWWA C 905 AWWA C 605
Steel	ASTM A 139 Grade B(1)	AWWA C 200 API 2B(2)
(1) No hydrostatic test required (2) Dimensional tolerances only		

PART 3 – CONSTRUCTION SITE REQUIREMENTS

3.1. Pedestrian Traffic: When and where installations temporarily disrupt use of a pedestrian way, provide a safe alternate route.

3.2. Site Conditions:

a) Sump pits are required to contain drilling fluids if vacuum devices are not operated throughout the drilling operation, unless approved by the Engineer.

b) Within 48 hours of completing installation of the product, clean the work site of all excess slurry or spoils. Take responsibility for the removal and final disposition of excess slurry or spoils. Ensure that the work site is restored to pre-construction conditions or as identified in the Plans.

3.3. Damage Restoration: Take responsibility for restoration for any damage caused by heaving, settlement, separation of pavement, escaping drilling fluid (frac-out), or the directional drilling operation, at no additional cost.

Remediation Plans: When required by the Engineer, provide detailed plans which show how damage to any facility will be remedied. These details will become part of the As-Built Plans Package. Remediation plans must follow the same guidelines for development and

presentation of the As-Built Plans. When remediation plans are required, they must be approved by the Engineer before any work proceeds.

PART 4 – QUALITY CONTROL

4.1. General: Take control of the operation at all times. Have a representative who is thoroughly knowledgeable of the equipment, boring and Department procedures, present at the job site during the entire installation and available to address immediate concerns and emergency operations. Notify the Engineer 48 hours in advance of starting work. Do not begin installation until the Engineer is present at the job site and agrees that proper preparations have been made.

4.1.1 Product Testing: When there is any indication that the installed product has sustained damage and may leak, stop all work, notify the Engineer and investigate the damage. The Engineer may require a pressure test and reserves the right to be present during the test. Perform pressure test within 24 hours, unless otherwise approved by the Engineer. Furnish a copy of test results to the Engineer for review and approval. The Engineer is allowed up to 72 hours to approve or determine if the product installation is not in compliance with the specifications. The Engineer may require non-compliant installations to be filled with excavatable flowable fill.

4.1.2 Testing Methods: Testing may consist of one of the following methods and must always meet or exceed the Department's testing requirements:

a) Follow the product manufacturer's pressure testing recommendations.

b) Ensure carrier pipes installed without a casing meet the pressure requirements set by the owner. If the owner does not require pressure testing, the Engineer may require at least one test.

c) A water tight pipe and joint configuration where the product is installed beneath any pavement (including sidewalk) and front shoulders is required. The Engineer will determine when and where water tight joint requirements will be applied to the ultimate roadway section for future widening. When a product is located elsewhere, the pipe and joint configuration must meet or exceed soil tight joint requirements. Conduct tests for joint integrity for one hour. The test for a soil tight joint allows up to 0.1 gallon of water leakage at a sustained pressure of 2 PSI. The water tight joint criteria allows no leakage at all for a sustained pressure of 5 PSI.

4.1.3 Failed Bore Path: If conditions warrant removal of any materials installed in a failed bore path, as determined by the Engineer, it will be at no cost to the Department. Promptly fill all voids with excavatable flowable fill.

4.2. Product Locating and Tracking: The method of locating and tracking the drill head during the pilot bore will be shown in the Plans. The Department recognizes walkover, wire line, and wire

line with surface grid verification, or any other system as approved by the Engineer, as the accepted methods of tracking directional bores. Use a locating and tracking system capable of ensuring the proposed installation is installed as intended. If an area of radio signal interference is expected to exceed 5 feet, the Engineer may specify the use of a suitable tracking system. The locating and tracking system must provide information on:

a) Clock and pitch information
b) Depth
c) Transmitter temperature
d) Battery status
e) Position (x,y)
f) Azimuth, where direct overhead readings (walkover) are not possible (i.e. subaqueous or limited access transportation facility)
g) Ensure proper calibration of all equipment before commencing directional drilling operation.
h) Take and record alignment readings or plot points such that elevations on top of and offset dimensions from the center of the product to a permanent fixed feature are provided. Such permanent fixed feature must have prior approval of the Engineer. Provide elevations and dimensions at all bore alignment corrections (vertical and horizontal) with a minimum distance between points of 100 feet. Provide a sufficient number of elevations and offset distances to accurately plot the vertical and horizontal alignment of the installed product. A minimum of three elevation and plot points are required.

Install all facilities such that their location can be readily determined by electronic designation after installation. For non-conductive installations, attach a minimum of two separate and continuous conductive tracking (tone wire) materials, either externally, internally or integral with the product. Use either a continuous green sheathed solid conductor copper wire line (minimum #12 AWG for external placement with the carrier pipes or minimum #14 AWG for internal placement in the conduit, casing or duct) or a coated conductive tape. Conductors must be located on opposite sides when installed externally. Connect any break in the conductor line before construction with an electrical clamp, or solder, and coat the connection with a rubber or plastic insulator to maintain the integrity of the connection from corrosion. Clamp connections must be made of brass or copper and of the butt end type with wires secured by compression. Soldered connections must be made by tight spiral winding of each wire around the other with a finished length minimum of 3 inches overlap. Tracking conductors must extend 2 feet beyond bore termini. Test conductors for continuity. Each conductor that passes must be identified as such by removing the last 6

inches of the sheath. No deductions are allowed for failed tracking conductors. Failed conductor ends must be wound into a small coil and left attached for future use.

4.3. Product Bore Hole Diameter: Minimize potential damage from soil displacement/settlement by limiting the ratio of the bore hole to the product size. The size of the back reamer bit or pilot bit, if no back reaming is required, will be limited relative to the product diameter to be installed as follows:

Maximum Pilot or Back-Reamer Bit Diameter When Rotated 360 Degrees	
Outside Pipe Diameter Inches*	Maximum Bit Diameter INches
<8	Diameter +4
8 to 24	1.5 x Diameter
>24	Diameter +12
* Use manufacturer's recommendation for pipe with restrained joints.	

4.4. Drilling Fluids: Use a mixture of bentonite clay or other approved stabilizing agent mixed with potable water with a minimum pH of 6.0 to create the drilling fluid for lubrication and soil stabilization. Do not use any other chemicals or polymer surfactants in the drilling fluid without written consent from the Engineer. Certify to the Engineer in writing that any chemicals to be added are environmentally safe and not harmful or corrosive to the facility. Identify the source of water for mixing the drilling fluid. Any water source used other than a potable water source may require a pH test.

4.5. Equipment Requirements: Ensure that the appropriate equipment is provided to facilitate the installation as follows:

HDD Equipment				
System Description	Pipe [(1)] Diameter Inches	Bore Length Feet	Torque Ft-Lbs	Thrust/Pullback Lbs
Maxi-HDD	18 and greater	>1,000	>10,000	>70,000
Midi-HDD	Up to 16	Up to 1,000	1,900 to 9,999	20,001 to 69,999
Mini-HDD	Up to 6	Up to 600	UP to 1,999	Up to 20,000
[(1)] For the above, multiple pipe or conduit installations must not exceed the total outside diameters stated above (not coupler diameter if using pipe with restrained joints).				

Match equipment to the size of pipe being installed. Obtain the Engineer's approval for installations differing from the above chart. Ensure that the drill rod can meet the bend radius required for the proposed installation.

4.6. Thrust/Pullback Requirements: Unless approved by the Engineer, limit use of HDD equipment to installing the following product sizes and lengths based on the following product size, force and length relationships.

HDD Bore Equipment Thrust/Pullback Capability						
Lbs	5,000 to 7,000	7,001 to 12,000	12,001 to 16,000	16,001 to 25,000	25,001 to 40,000	>40,000
Product Size [(1)] Inches	Maximum Pullback Distance in Feet					
4 or <	400 or <					
6 or <		600 or <				
8 or <			800 or <			
10 or <				1,000 or <		
12 [300] or <					2,000 or <	
>12 [300]						Engineer's Discretion
[(1)] for the above, where a single pull of multiple conduits is to be attempted, the applicable product size must be determined by the diameter of the circle that will circumscribe the individual conduits as a group.						

PART 5 – DRILLING OPERATIONS

5.1. Installation Process: Ensure adequate removal of soil cuttings and stability of the bore hole by monitoring the drilling fluids such as the pumping rate, pressures, viscosity and density during the pilot bore, back reaming and pipe installation. Relief holes can be used as necessary to relieve excess pressure down hole. Obtain the Engineer's approval of the location and all conditions necessary to construct relief holes to ensure the proper disposition of drilling fluids is maintained and unnecessary inconvenience is minimized to other facility users.

To minimize heaving during pull back, the pull back rate is determined in order to maximize the removal of soil cuttings without building excess down hole pressure. Contain excess drilling fluids at entry and exit points until they are recycled or removed from the site or vacuumed during drilling operations. Ensure that entry and exit pits are of sufficient size to contain the expected return of drilling fluids and soil cuttings.

Ensure that all drilling fluids are disposed of or recycled in a manner acceptable to the appropriate local, state, or federal regulatory agencies. When drilling in suspected contaminated

ground, test the drilling fluid for contamination and appropriately dispose of it. Remove any excess material upon completion of the bore. If in the drilling process it becomes evident that the soil is contaminated, contact the Engineer immediately. Do not continue drilling without the Engineer's approval.

When conditions warrant, as determined by the Engineer, back reaming for enlarging the bore diameter shall be accomplished by connecting the reamer to trailing drill stems at the exit pit of the pilot bore. The drill pipe shall remain in the bore hole until the final product is pulled into place. After the pilot bore is established, do not push anything from the entry pit to the exit pit.

The timing of all boring processes is critical. Install a product into a bore hole within the same day that the pre-bore is completed to ensure necessary support exists.

5.2. Boring Failure: If an obstruction is encountered during boring which prevents completion of the installation in accordance with the design location and specification, the pipe may be taken out of service and left in place at the discretion of the Engineer. Immediately fill the product left in place with excavatable flowable fill. Submit a new installation procedure and revised plans to the Engineer for approval before resuming work at another location. If, during construction, damage is observed to the FDOT facility, cease all work until resolution to minimize further damage and a plan of action for restoration is obtained and approved by the Engineer.

PART 6 – DOCUMENTATION REQUIREMENTS

6.1. Boring Path Report: Furnish a Bore Path Report to the Engineer within seven days of the completion of each bore path. Include the following in the report:

a) Location of project and financial project number including the Permit Number when assigned.
b) Name of person collecting data, including title, position and company name
c) Investigation site location (Contract Plans station number or reference to a permanent structure within the project right of way)
d) Identification of the detection method used
e) Elevations and offset dimensions as required in paragraph 4.2

6.2. As-Built Plans: Provide the Engineer a complete set of As-Built Plans showing all bores (successful and failed) within 30 calendar days of completing the work. Ensure that the plans are dimensionally correct copies of the Contract Plans and include roadway plan and profile, cross-section, boring location and subsurface conditions as directed by the Engineer. The plans must show appropriate elevations and be referenced to a Department Bench Mark when associated with a Department project, otherwise to a U.S. Geological Survey (USGS) grid system and datum, or a specific location on top of an existing Department head wall. Plans must be same scale in black ink on white paper, of the same size and weight as the Contract Plans. Submittal of electronic plans data in lieu of hard copy plans is preferred and may be approved by the Engineer if compatible with the Department software. Specific plans content requirements include but may not be limited to the following:

a) The Contract plan view shows the center line location of each facility installed, or installed and placed out of service, to an accuracy of 1 inch at the ends and other points physically observed in accordance with the bore path report.

b) As directed by the Engineer, provide either a profile plan for each bore path, or a cross-section of the roadway at a station specified by the Engineer, or a roadway centerline profile. Show the ground or pavement surface and crown elevation of each facility installed, or installed and placed out of service, to an accuracy within 1 inch at the ends and other exposed locations. On profile plans for bore paths crossing the roadway show stationing of the crossing on the Contract Plans. On the profile plans for the bore paths paralleling the roadway, show the Contract Plans stationing. If the profile plan for the bore path is not made on a copy of one of the Contract profile or cross-section sheets, use a 10 to 1 vertical exaggeration.

c) If, during boring, an obstruction is encountered which prevents completion of the installation in accordance with the design location and specification, and the product is left in place and taken out of service, show the failed bore path along with the final bore path in the Plans. Note the failed bore path as “Failed Bore Path - Taken Out of Service”. Also show the name of the Utility owner, location and length of the drill head and any drill stems not removed from the bore path.

d) Show the top elevation, diameter and material type of all utilities encountered and physically observed during the subsoil investigation. For all other obstructions encountered during a subsoil investigation or the installation, show the type of material, horizontal and vertical location, top and lowest elevation observed, and note if the obstruction continues below the lowest point observed.

e) Include bore notes on each plan stating the final bore path diameter, product diameter, drilling fluid composition, composition of any other materials used to fill the annular void between the bore path and the product, or facility placed out of service. Note if the product is a casing as well as the size and type of carrier pipes placed within the casing as part of the Contract work.

PART 7 – METHOD OF MEASUREMENT

The method of measurement will be based on the length of product measured in place along the surface of the ground, complete and accepted. No additions or deductions will be made for sweeps in either the vertical or horizontal direction to complete the installation.

PART 8 – BASIS OF PAYMENT

Price and payment will be full compensation for all work specified in this Section, including furnishing and installing product, from plan point of beginning to plan point of ending at plan depth, removal of excavated materials and spoils, removal and disposal of drilling fluids, backfilling, and complete restoration of the site. Bundled product in a single bore will be paid for as a single bore based on the equivalent outside pipe diameter (not restrained joint diameter). Separate payment shall not be made for individual products in a bundle.

The cost to populate the installed product (such as wires, pipes or carriers in conduit/casing/ducts) will be made under a separate pay item.

The installation and attachment of tracking conductors (wire or tape) will be included in the cost of the bore and will not be paid for separately.

No payment will be made for failed bore paths, injection of excavatable flowable fill, products taken out of service or incomplete installations.

No payment will be made for directional boring until a Bore Path Report has been delivered to the Engineer.

Payment will be made under:

Item L-330523-1 1W-2” Directional Bore – per linear foot

Item L-330523-2 2W-2” Directional Bore – per linear foot

END OF SECTION 33 05 23

APPENDIX 'A'
GEOTECHNICAL REPORT

NOTES

1). The Engineer has relied on the attached geotechnical and subsurface investigation data in preparation of the Contract Documents.

2). The information is hereby reproduced as "FOR INFORMATION ONLY". They are not part of Contract Documents, but Bidders may rely upon the accuracy of the technical data contained and not upon non-technical data, interpretations or opinions or for the completeness thereof for purposes of bidding or construction.

3). Before submitting this Bid, each Bidder may, at his own expense and assuming all risks, make such additional investigations and test as the Bidder may deem necessary to determine his Bid for performance of the Work in accordance with the time, price and other terms and conditions of the Contract Documents.

BID DOCUMENTS

CONSTRUCT WEST APRON EXPANSION
AND INFRASTRUCTURE AT VPS

Geotechnical Exploration Report
VPS Airport Terminal Expansion
Valparaiso, Okaloosa County, Florida

Prepared for

Infrastructure Consulting and Engineering
5550 West Idlewild Avenue, Suite 102
Tampa, Florida 33634

Prepared by

Professional Service Industries, Inc.
175 South A Street
Pensacola, Florida 32502

August 23, 2018

PSI Project 07832578

Phil Kauzlarich, P.E.
Project Engineer
Florida License No. 75599

Lloyd T. Lasher, Jr., P.E.
Principal Consultant
Florida License No. 56794

TABLE OF CONTENTS

1 PROJECT INFORMATION 3
1.1 PROJECT DESCRIPTION 3
1.2 PURPOSE AND SCOPE OF WORK 3
2 FIELD EXPLORATION AND LABORATORY TESTING 4
2.1 FIELD EXPLORATION 4
2.2 LABORATORY TESTING 4
3 SITE AND SUBSURFACE CONDITIONS 5
3.1 SUBSURFACE CONDITIONS 5
3.2 GROUNDWATER 5
4 REPORT LIMITATIONS 6

FIGURES
FIGURE 1 – Boring Location Plan

Boring Logs
Laboratory Results

1 PROJECT INFORMATION

1.1 PROJECT DESCRIPTION

We understand that infrastructure Consulting and Engineering plans to construct a 5-position aircraft apron at the Destin-Fort Walton Beach Airport in Valparaiso, Florida, as shown on the Vicinity Map presented in the Appendix.

No engineering services were requested or performed for the proposed development. This report presents the findings of the soil borings and laboratory testing performed.

Should any of the above information be inconsistent with the planned construction, PSI requests that you contact us immediately to allow us to make any necessary modifications to this report.

1.2 PURPOSE AND SCOPE OF WORK

The purpose of this exploration was to obtain information on the general subsurface soil and groundwater conditions at the proposed project site.
The following services were provided:

1. Executed a program of subsurface sampling and field testing which included:
    a. Eighteen (18) soil test borings drilled in the new airplane parking area to a depth of 10 feet each below existing grade.
    b. Twelve (12) cores of the existing asphalt paving with a hand auger to a depth of 5 feet below top of existingpavement.
2. Visually classified and stratified representative soil samples in the laboratory using the Unified Soil Classification System. Conducted a limited laboratory testing program to assist with soil classifications. Identified soil conditions at each boring location and formed an opinion of the site soil stratigraphy.

2 FIELD EXPLORATION AND LABORATORY TESTING

2.1 FIELD EXPLORATION

The approximate locations of our Standard Penetration Test (SPT) borings are shown on Sheet 1 in Appendix A. The boring locations were determined in the field by estimating distances from existing features identified on the plans provided and should be considered approximate.

The SPT borings were performed in general accordance with the procedures of ASTM D-1586. SPT samples were obtained at approximately 2-foot intervals to a depth of 10 feet and at approximately 5-foot depth intervals thereafter. Soil Samples were obtained in the SPT borings by driving a standard 2-inch (O.D.) split-spoon sampler a distance of 24 inches using a 140-lb hammer dropped from a height of 30 inches. The number of blows required to drive the standard split spoon sampler the middle 12 inches is known as the penetration resistance (N-value) measured in blows per foot (bpf). Penetration resistance values provide an indication of the relative density of granular soils, such as sand, and the relative consistency, of cohesive soils, such as clay or silt.

Samples from the SPT borings were placed in sealed containers and transported to PSI's soils and materials laboratory for further examination and testing. Upon completion of the SPT borings, the boreholes were backfilled to existing grade with soil cuttings. The results of the borings are presented in Appendix A in the form of soil profiles.

Included with the boring profiles is a legend describing the encountered soils in Unified Soil Classification System (USCS) format, measured groundwater levels and laboratory test results. The soil stratification presented is based on visual observation of the recovered samples, interpretation of field logs by a geotechnical engineer and the results of the laboratory testing. It should be noted that variations in the subsurface conditions are expected and may be encountered between and away from the boring. Also, whereas the individual boring logs indicate distinct strata breaks, the actual transition between the soil layers may be more gradual than shown on the soil profiles.

2.2 LABORATORY TESTING

Representative samples of soil obtained from the borings were tested to determine physical and engineering properties. The laboratory testing program included determinations of natural moisture content, fines content, and California Bearing Ratio. The laboratory results are presented in Appendix A.

3 SITE AND SUBSURFACE CONDITIONS

3.1 SUBSURFACE CONDITIONS

In general, the SPT borings performed at the site encountered very loose to medium dense clean to slightly silty sands (SP and SP-SM) to the maximum depth explored of about 10 feet below existing grade.

3.2 GROUNDWATER

Groundwater was not apparent at the time of drilling to the maximum depth explored of about 10 feet.

Groundwater conditions will vary with environmental changes and seasonal conditions, such as, the frequency and magnitude of rainfall patterns, as well as man-made influences, such as swales, drainage ponds, underdrains, stormwater collection systems and areas of covered soil (buildings, paved parking lots, sidewalks, etc.).

4 REPORT LIMITATIONS

Our professional services have been performed, our findings obtained, and our recommendations prepared in accordance with generally accepted geotechnical engineering principles and practices. This company is not responsible for the conclusions, opinions or recommendations made by others based on these data.

The scope of our exploration was intended to evaluate soil conditions within the influence of the proposed pavements and does not include an evaluation of potential deep soil problems such as sinkholes. The analysis and recommendations submitted in this report are based upon the data obtained from the soil borings performed at the locations indicated and does not reflect any variations which may occur between or away from the borings. If any subsoil variations become evident during the course of this project, a re-evaluation of the recommendations contained in this report will be necessary after we have had an opportunity to observe the characteristics of the conditions encountered. The applicability of the report should also be reviewed in the event significant changes occur in the design, nature or location of the proposed construction.

The scope of our services does not include any environmental assessment or investigation for the presence or absence of hazardous or toxic materials in the soil, groundwater, or surface water within or beyond the site studied. Any statements in this report regarding odors, staining of soils, or other unusual conditions observed are strictly for the information of our client.

BORING LOCATION PLAN

SCALE: UNKNOWN
SCHEMATIC PROVIDED BY INFRASTRUCTURE CONSULTING AND ENGINEERING

LEGEND

⊕	APPROXIMATE LOCATION OF STANDARD PENETRATION TEST BORING
⊕	APPROXIMATE LOCATION OF PAVEMENT CORE

GEOTECHNICAL ENGINEERING SERVICES

VPS AIRPORT TERMINAL EXPANSION

VALPARAISO, OKALOOSA COUNTY, FLORIDA

psi *Information To Build On*

Engineering • Consulting • Testing

DRAWN:	PDK	SCALE:	NOTED	PROJ. NO:	0783-2578
CHKD:	LL	DATE:	8/22/2018	SHEET:	1

BORING B-01

DATE STARTED:	7/30/18	**DRILL COMPANY:**	ERG, Inc.
DATE COMPLETED:	7/30/18	**DRILLER:** BK	**LOGGED BY:** PDK
COMPLETION DEPTH	10.0 ft	**DRILL RIG:**	Kinco
BENCHMARK:	N/A	**DRILLING METHOD:**	Solid Flight Auger
ELEVATION:	N/A	**SAMPLING METHOD:**	2-in SS
LATITUDE:		**HAMMER TYPE:**	Safety
LONGITUDE:		**EFFICIENCY**	N/A
STATION: N/A	**OFFSET:** N/A	**REVIEWED BY:**	

REMARKS: *GNE = Groundwater Not Encountered

Water

While Drilling	GNE	feet
Upon Completion	GNE	feet
Delay		N/A

BORING LOCATION:

Elevation (feet)	Depth, (feet)	Graphic Log	Sample Type	Sample No.	Recovery (inches)	MATERIAL DESCRIPTION	USCS Classification	SPT Blows per 6-inch (SS)	Moisture, %	STANDARD PENETRATION TEST DATA N in blows/ft ◎ × Moisture ◪ PL ✚ LL (0, 25, 50) STRENGTH, tsf ▲ Qu ✳ Qp (0, 2.0, 4.0)	Additional Remarks
	0					ASPHALT: 2-1/4 Inches	ASPHALT				
						AGGREGATE BASE: 8 Inches	BASE				
						Brown Medium Dense Fine-Grained SAND with Silt	SP-SM	N=19			
								N=14	4	×	-200 = 5.8%
						Tan/Brown Very Loose to Loose Fine-Grained SAND	SP	N=4			
	5							N=6			
								N=6			
	10					Boring Terminated at 10 Feet					

intertek psi

Professional Service Industries, Inc.
175 S. "A" Street
Pensacola, FL 32502
Telephone: (850) 434-1000

PROJECT NO.: 07832578
PROJECT: VPS Airport Expansion
LOCATION: Valparaiso, Florida

The stratification lines represent approximate boundaries. The transition may be gradual.

BORING B-02

DATE STARTED:	7/30/18	**DRILL COMPANY:**	ERG, Inc.
DATE COMPLETED:	7/30/18	**DRILLER:** BK	**LOGGED BY:** PDK
COMPLETION DEPTH	10.0 ft	**DRILL RIG:**	Kinco
BENCHMARK:	N/A	**DRILLING METHOD:**	Solid Flight Auger
ELEVATION:	N/A	**SAMPLING METHOD:**	2-in SS
LATITUDE:		**HAMMER TYPE:**	Safety
LONGITUDE:		**EFFICIENCY**	N/A
STATION: N/A	**OFFSET:** N/A	**REVIEWED BY:**	

REMARKS: *GNE = Groundwater Not Encountered

Water

While Drilling	GNE	feet
Upon Completion	GNE	feet
Delay	N/A	

BORING LOCATION:

Elevation (feet)	Depth, (feet)	Graphic Log	Sample Type	Sample No.	Recovery (inches)	MATERIAL DESCRIPTION	USCS Classification	SPT Blows per 6-inch (SS)	Moisture, %	STANDARD PENETRATION TEST DATA N in blows/ft ◎ × Moisture ◪ PL ✚ LL (0, 25, 50) STRENGTH, tsf ▲ Qu ✳ Qp (0, 2.0, 4.0)	Additional Remarks
	0					Brown Very Loose to Loose Fine-Grained SAND with Silt	SP-SM	N=7	3		-200 = 6.0%
								N=3			
						Tan/Brown Very Loose to Loose Fine-Grained SAND					
	5							N=3			
							SP	N=4			
								N=7			
	10					Boring Terminated at 10 Feet					

intertek psi

Professional Service Industries, Inc.
175 S. "A" Street
Pensacola, FL 32502
Telephone: (850) 434-1000

PROJECT NO.: 07832578
PROJECT: VPS Airport Expansion
LOCATION: Valparaiso, Florida

The stratification lines represent approximate boundaries. The transition may be gradual.

BORING B-03

DATE STARTED:	7/30/18	**DRILL COMPANY:**	ERG, Inc.
DATE COMPLETED:	7/30/18	**DRILLER:** BK	**LOGGED BY:** PDK
COMPLETION DEPTH	10.0 ft	**DRILL RIG:**	Kinco
BENCHMARK:	N/A	**DRILLING METHOD:**	Solid Flight Auger
ELEVATION:	N/A	**SAMPLING METHOD:**	2-in SS
LATITUDE:		**HAMMER TYPE:**	Safety
LONGITUDE:		**EFFICIENCY**	N/A
STATION: N/A	**OFFSET:** N/A	**REVIEWED BY:**	

REMARKS: *GNE = Groundwater Not Encountered

Water

While Drilling	GNE	feet
Upon Completion	GNE	feet
Delay		N/A

BORING LOCATION:

Elevation (feet)	Depth, (feet)	Graphic Log	Sample Type	Sample No.	Recovery (inches)	MATERIAL DESCRIPTION	USCS Classification	SPT Blows per 6-inch (SS)	Moisture, %	STANDARD PENETRATION TEST DATA N in blows/ft ◎ × Moisture ◪ PL ✚ LL (0, 25, 50) STRENGTH, tsf ▲ Qu ✳ Qp (0, 2.0, 4.0)	Additional Remarks
	0					Brown Loose to Medium Dense Fine-Grained SAND with Silt	SP-SM	N=11			
								N=9			
	5					Tan/Brown Very Loose to Loose Fine-Grained SAND	SP	N=4			
								N=5			
								N=7	3		-200 = 2.4%
	10					Boring Terminated at 10 Feet					

intertek psi

Professional Service Industries, Inc.
175 S. "A" Street
Pensacola, FL 32502
Telephone: (850) 434-1000

PROJECT NO.: 07832578
PROJECT: VPS Airport Expansion
LOCATION: Valparaiso, Florida

The stratification lines represent approximate boundaries. The transition may be gradual.

BORING B-04

DATE STARTED:	7/30/18	**DRILL COMPANY:**	ERG, Inc.
DATE COMPLETED:	7/30/18	**DRILLER:** BK	**LOGGED BY:** PDK
COMPLETION DEPTH	10.0 ft	**DRILL RIG:**	Kinco
BENCHMARK:	N/A	**DRILLING METHOD:**	Solid Flight Auger
ELEVATION:	N/A	**SAMPLING METHOD:**	2-in SS
LATITUDE:		**HAMMER TYPE:**	Safety
LONGITUDE:		**EFFICIENCY**	N/A
STATION: N/A	**OFFSET:** N/A	**REVIEWED BY:**	

REMARKS: *GNE = Groundwater Not Encountered

Water

While Drilling	GNE	feet
Upon Completion	GNE	feet
Delay		N/A

BORING LOCATION:

Elevation (feet)	Depth, (feet)	Graphic Log	Sample Type	Sample No.	Recovery (inches)	MATERIAL DESCRIPTION	USCS Classification	SPT Blows per 6-inch (SS)	Moisture, %	STANDARD PENETRATION TEST DATA N in blows/ft ◎ × Moisture ◪ PL ✚ LL (0, 25, 50) STRENGTH, tsf ▲ Qu ✳ Qp (0, 2.0, 4.0)	Additional Remarks
	0					Brown Loose Fine-Grained SAND with Silt	SP-SM	N=10			
								N=5			
						Tan/Brown Very Loose to Loose Fine-Grained SAND	SP	N=3	3		-200 = 1.7%
	5							N=4			
								N=5			
	10					Boring Terminated at 10 Feet					

intertek psi

Professional Service Industries, Inc.
175 S. "A" Street
Pensacola, FL 32502
Telephone: (850) 434-1000

PROJECT NO.: 07832578
PROJECT: VPS Airport Expansion
LOCATION: Valparaiso, Florida

The stratification lines represent approximate boundaries. The transition may be gradual.

BORING B-05

DATE STARTED:	7/30/18	**DRILL COMPANY:**	ERG, Inc.
DATE COMPLETED:	7/30/18	**DRILLER:** BK	**LOGGED BY:** PDK
COMPLETION DEPTH	10.0 ft	**DRILL RIG:**	Kinco
BENCHMARK:	N/A	**DRILLING METHOD:**	Solid Flight Auger
ELEVATION:	N/A	**SAMPLING METHOD:**	2-in SS
LATITUDE:		**HAMMER TYPE:**	Safety
LONGITUDE:		**EFFICIENCY**	N/A
STATION: N/A	**OFFSET:** N/A	**REVIEWED BY:**	

REMARKS: *GNE = Groundwater Not Encountered

Water

While Drilling	GNE	feet
Upon Completion	GNE	feet
Delay		N/A

BORING LOCATION:

Elevation (feet)	Depth, (feet)	Graphic Log	Sample Type	Sample No.	Recovery (inches)	MATERIAL DESCRIPTION	USCS Classification	SPT Blows per 6-inch (SS)	Moisture, %	STANDARD PENETRATION TEST DATA N in blows/ft ◎ × Moisture ◪ PL ✚ LL (0, 25, 50) STRENGTH, tsf ▲ Qu ✳ Qp (0, 2.0, 4.0)	Additional Remarks
	0					Brown Loose to Medium Dense Fine-Grained SAND with Silt	SP-SM	N=10 N=12			
	5					Tan/Brown Very Loose to Loose Fine-Grained SAND	SP	N=3 N=5			
	10					Boring Terminated at 10 Feet		N=7			

intertek psi

Professional Service Industries, Inc.
175 S. "A" Street
Pensacola, FL 32502
Telephone: (850) 434-1000

PROJECT NO.: 07832578
PROJECT: VPS Airport Expansion
LOCATION: Valparaiso, Florida

The stratification lines represent approximate boundaries. The transition may be gradual.

BORING B-06

DATE STARTED:	7/30/18	**DRILL COMPANY:**	ERG, Inc.
DATE COMPLETED:	7/30/18	**DRILLER:** BK	**LOGGED BY:** PDK
COMPLETION DEPTH	10.0 ft	**DRILL RIG:**	Kinco
BENCHMARK:	N/A	**DRILLING METHOD:**	Solid Flight Auger
ELEVATION:	N/A	**SAMPLING METHOD:**	2-in SS
LATITUDE:		**HAMMER TYPE:**	Safety
LONGITUDE:		**EFFICIENCY**	N/A
STATION: N/A	**OFFSET:** N/A	**REVIEWED BY:**	

REMARKS: *GNE = Groundwater Not Encountered

Water

While Drilling	GNE	feet
Upon Completion	GNE	feet
Delay	N/A	

BORING LOCATION:

Elevation (feet)	Depth, (feet)	Graphic Log	Sample Type	Sample No.	Recovery (inches)	MATERIAL DESCRIPTION	USCS Classification	SPT Blows per 6-inch (SS)	Moisture, %	STANDARD PENETRATION TEST DATA N in blows/ft ◎ × Moisture ◪ PL ✚ LL (0, 25, 50) STRENGTH, tsf ▲ Qu ✳ Qp (0, 2.0, 4.0)	Additional Remarks
	0					Brown Very Loose to Loose Fine-Grained SAND with Silt	SP-SM	N=6			
								N=3			
						Tan/Brown Very Loose to Loose Fine-Grained SAND					
	5							N=3			
							SP	N=4			
								N=7			
	10					Boring Terminated at 10 Feet					

intertek psi

Professional Service Industries, Inc.
175 S. "A" Street
Pensacola, FL 32502
Telephone: (850) 434-1000

PROJECT NO.: 07832578
PROJECT: VPS Airport Expansion
LOCATION: Valparaiso, Florida

The stratification lines represent approximate boundaries. The transition may be gradual.

BORING B-07

DATE STARTED:	7/26/18	**DRILL COMPANY:**	ERG, Inc.
DATE COMPLETED:	7/26/18	**DRILLER:** BK	**LOGGED BY:** PDK
COMPLETION DEPTH	10.0 ft	**DRILL RIG:**	Kinco
BENCHMARK:	N/A	**DRILLING METHOD:**	Solid Flight Auger
ELEVATION:	N/A	**SAMPLING METHOD:**	2-in SS
LATITUDE:		**HAMMER TYPE:**	Safety
LONGITUDE:		**EFFICIENCY**	N/A
STATION: N/A	**OFFSET:** N/A	**REVIEWED BY:**	

REMARKS: *GNE = Groundwater Not Encountered

Water

While Drilling	GNE	feet
Upon Completion	GNE	feet
Delay	N/A	

BORING LOCATION:

Elevation (feet)	Depth, (feet)	Graphic Log	Sample Type	Sample No.	Recovery (inches)	MATERIAL DESCRIPTION	USCS Classification	SPT Blows per 6-inch (SS)	Moisture, %	STANDARD PENETRATION TEST DATA N in blows/ft ◎ × Moisture ◪ PL ✚ LL (0, 25, 50) STRENGTH, tsf ▲ Qu ✳ Qp (0, 2.0, 4.0)	Additional Remarks
	0					Brown Very Loose to Loose Fine-Grained SAND with Silt	SP-SM	N=7			
								N=4			
						Tan/Brown Loose Fine-Grained SAND					
	5						SP	N=7			
								N=7			
								N=5			
	10					Boring Terminated at 10 Feet					

intertek psi

Professional Service Industries, Inc.
175 S. "A" Street
Pensacola, FL 32502
Telephone: (850) 434-1000

PROJECT NO.: 07832578
PROJECT: VPS Airport Expansion
LOCATION: Valparaiso, Florida

The stratification lines represent approximate boundaries. The transition may be gradual.

BORING B-08

DATE STARTED:	7/26/18	**DRILL COMPANY:**	ERG, Inc.
DATE COMPLETED:	7/26/18	**DRILLER:** BK	**LOGGED BY:** PDK
COMPLETION DEPTH	10.0 ft	**DRILL RIG:**	Kinco
BENCHMARK:	N/A	**DRILLING METHOD:**	Solid Flight Auger
ELEVATION:	N/A	**SAMPLING METHOD:**	2-in SS
LATITUDE:		**HAMMER TYPE:**	Safety
LONGITUDE:		**EFFICIENCY**	N/A
STATION: N/A	**OFFSET:** N/A	**REVIEWED BY:**	

REMARKS: *GNE = Groundwater Not Encountered

Water

While Drilling	GNE	feet
Upon Completion	GNE	feet
Delay	N/A	

BORING LOCATION:

Elevation (feet)	Depth, (feet)	Graphic Log	Sample Type	Sample No.	Recovery (inches)	MATERIAL DESCRIPTION	USCS Classification	SPT Blows per 6-inch (SS)	Moisture, %	STANDARD PENETRATION TEST DATA N in blows/ft ◎ × Moisture ◪ PL ✚ LL (0, 25, 50) STRENGTH, tsf ▲ Qu ✳ Qp (0, 2.0, 4.0)	Additional Remarks
	0					Brown Loose Fine-Grained SAND with Silt	SP-SM	N=8			
								N=7			
						Tan/Brown Loose Fine-Grained SAND					
	5						SP	N=5			
								N=8			
								N=8			
	10					Boring Terminated at 10 Feet					

intertek psi

Professional Service Industries, Inc.
175 S. "A" Street
Pensacola, FL 32502
Telephone: (850) 434-1000

PROJECT NO.: 07832578
PROJECT: VPS Airport Expansion
LOCATION: Valparaiso, Florida

The stratification lines represent approximate boundaries. The transition may be gradual.

BORING B-09

DATE STARTED:	7/26/18	**DRILL COMPANY:**	ERG, Inc.
DATE COMPLETED:	7/26/18	**DRILLER:** BK	**LOGGED BY:** PDK
COMPLETION DEPTH	10.0 ft	**DRILL RIG:**	Kinco
BENCHMARK:	N/A	**DRILLING METHOD:**	Solid Flight Auger
ELEVATION:	N/A	**SAMPLING METHOD:**	2-in SS
LATITUDE:		**HAMMER TYPE:**	Safety
LONGITUDE:		**EFFICIENCY**	N/A
STATION: N/A	**OFFSET:** N/A	**REVIEWED BY:**	

REMARKS: *GNE = Groundwater Not Encountered

Water

While Drilling	GNE	feet
Upon Completion	GNE	feet
Delay	N/A	

BORING LOCATION:

Elevation (feet)	Depth, (feet)	Graphic Log	Sample Type	Sample No.	Recovery (inches)	MATERIAL DESCRIPTION	USCS Classification	SPT Blows per 6-inch (SS)	Moisture, %	STANDARD PENETRATION TEST DATA N in blows/ft ◎ × Moisture ◪ PL ✚ LL (0, 25, 50) STRENGTH, tsf ▲ Qu ✳ Qp (0, 2.0, 4.0)	Additional Remarks
	0					Brown Loose Fine-Grained SAND with Silt	SP-SM	N=8	5		-200 = 3.0%
								N=7			
						Tan/Brown Loose Fine-Grained SAND					
	5						SP	N=6			
								N=8			
								N=9			
	10					Boring Terminated at 10 Feet					

intertek psi

Professional Service Industries, Inc.
175 S. "A" Street
Pensacola, FL 32502
Telephone: (850) 434-1000

PROJECT NO.: 07832578
PROJECT: VPS Airport Expansion
LOCATION: Valparaiso, Florida

The stratification lines represent approximate boundaries. The transition may be gradual.

BORING B-10

DATE STARTED:	7/26/18	**DRILL COMPANY:**	ERG, Inc.
DATE COMPLETED:	7/26/18	**DRILLER:** BK	**LOGGED BY:** PDK
COMPLETION DEPTH	10.0 ft	**DRILL RIG:**	Kinco
BENCHMARK:	N/A	**DRILLING METHOD:**	Solid Flight Auger
ELEVATION:	N/A	**SAMPLING METHOD:**	2-in SS
LATITUDE:		**HAMMER TYPE:**	Safety
LONGITUDE:		**EFFICIENCY**	N/A
STATION: N/A	**OFFSET:** N/A	**REVIEWED BY:**	

Water

While Drilling	GNE	feet
Upon Completion	GNE	feet
Delay		N/A

BORING LOCATION:

REMARKS: *GNE = Groundwater Not Encountered

Elevation (feet)	Depth, (feet)	Material Description	USCS Classification	SPT Blows per 6-inch (SS)	Moisture, %	Additional Remarks
	0	Brown Loose Fine-Grained SAND with Silt	SP-SM	N=9	5	-200 = 4.4%
				N=6		
		Tan/Brown Very Loose to Loose Fine-Grained SAND		N=2		
	5		SP	N=6		
				N=9		
	10	Boring Terminated at 10 Feet				

STANDARD PENETRATION TEST DATA
N in blows/ft ◎
× Moisture ◪ PL ✚ LL
0 25 50
STRENGTH, tsf
▲ Qu ✳ Qp
0 2.0 4.0

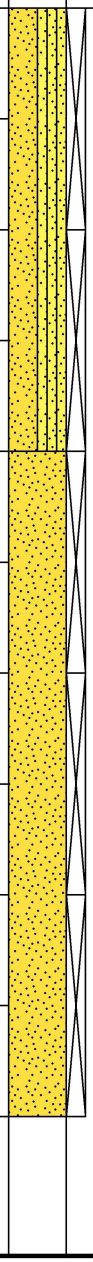

intertek psi

Professional Service Industries, Inc.
175 S. "A" Street
Pensacola, FL 32502
Telephone: (850) 434-1000

PROJECT NO.: 07832578
PROJECT: VPS Airport Expansion
LOCATION: Valparaiso, Florida

The stratification lines represent approximate boundaries. The transition may be gradual.

BORING B-11

DATE STARTED:	7/26/18	**DRILL COMPANY:**	ERG, Inc.
DATE COMPLETED:	7/26/18	**DRILLER:** BK	**LOGGED BY:** PDK
COMPLETION DEPTH	10.0 ft	**DRILL RIG:**	Kinco
BENCHMARK:	N/A	**DRILLING METHOD:**	Solid Flight Auger
ELEVATION:	N/A	**SAMPLING METHOD:**	2-in SS
LATITUDE:		**HAMMER TYPE:**	Safety
LONGITUDE:		**EFFICIENCY**	N/A
STATION: N/A	**OFFSET:** N/A	**REVIEWED BY:**	

REMARKS: *GNE = Groundwater Not Encountered

Water

While Drilling	GNE	feet
Upon Completion	GNE	feet
Delay		N/A

BORING LOCATION:

Elevation (feet)	Depth, (feet)	Graphic Log	Sample Type	Sample No.	Recovery (inches)	MATERIAL DESCRIPTION	USCS Classification	SPT Blows per 6-inch (SS)	Moisture, %	STANDARD PENETRATION TEST DATA N in blows/ft ◎ × Moisture ◪ PL ✚ LL (0, 25, 50) STRENGTH, tsf ▲ Qu ✳ Qp (0, 2.0, 4.0)	Additional Remarks
	0					Brown Loose Fine-Grained SAND with Silt	SP-SM	N=9			
								N=6			
						Tan/Brown Loose Fine-Grained SAND					
	5							N=6			
							SP	N=6			
								N=10	4	× ◎	-200 = 0.9%
	10					Boring Terminated at 10 Feet					

intertek psi

Professional Service Industries, Inc.
175 S. "A" Street
Pensacola, FL 32502
Telephone: (850) 434-1000

PROJECT NO.: 07832578
PROJECT: VPS Airport Expansion
LOCATION: Valparaiso, Florida

The stratification lines represent approximate boundaries. The transition may be gradual.

BORING B-12

DATE STARTED:	7/26/18	**DRILL COMPANY:**	ERG, Inc.
DATE COMPLETED:	7/26/18	**DRILLER:** BK	**LOGGED BY:** PDK
COMPLETION DEPTH	10.0 ft	**DRILL RIG:**	Kinco
BENCHMARK:	N/A	**DRILLING METHOD:**	Solid Flight Auger
ELEVATION:	N/A	**SAMPLING METHOD:**	2-in SS
LATITUDE:		**HAMMER TYPE:**	Safety
LONGITUDE:		**EFFICIENCY**	N/A
STATION: N/A	**OFFSET:** N/A	**REVIEWED BY:**	

REMARKS: *GNE = Groundwater Not Encountered

Water

While Drilling	GNE	feet
Upon Completion	GNE	feet
Delay	N/A	

BORING LOCATION:

Elevation (feet)	Depth, (feet)	Graphic Log	Sample Type	Sample No.	Recovery (inches)	MATERIAL DESCRIPTION	USCS Classification	SPT Blows per 6-inch (SS)	Moisture, %	STANDARD PENETRATION TEST DATA N in blows/ft ◎ × Moisture ◪ PL ✚ LL (0, 25, 50) STRENGTH, tsf ▲ Qu ✳ Qp (0, 2.0, 4.0)	Additional Remarks
	0					Brown Loose Fine-Grained SAND with Silt	SP-SM	N=6			
								N=6			
						Tan/Brown Loose Fine-Grained SAND					
	5						SP	N=6			
								N=7			
	10					Boring Terminated at 10 Feet		N=7			

intertek psi

Professional Service Industries, Inc.
175 S. "A" Street
Pensacola, FL 32502
Telephone: (850) 434-1000

PROJECT NO.: 07832578
PROJECT: VPS Airport Expansion
LOCATION: Valparaiso, Florida

The stratification lines represent approximate boundaries. The transition may be gradual.

BORING B-13

DATE STARTED:	7/30/18	**DRILL COMPANY:**	ERG, Inc.
DATE COMPLETED:	7/30/18	**DRILLER:** BK	**LOGGED BY:** PDK
COMPLETION DEPTH	10.0 ft	**DRILL RIG:**	Kinco
BENCHMARK:	N/A	**DRILLING METHOD:**	Solid Flight Auger
ELEVATION:	N/A	**SAMPLING METHOD:**	2-in SS
LATITUDE:		**HAMMER TYPE:**	Safety
LONGITUDE:		**EFFICIENCY**	N/A
STATION: N/A	**OFFSET:** N/A	**REVIEWED BY:**	

REMARKS: *GNE = Groundwater Not Encountered

Water

While Drilling	GNE	feet
Upon Completion	GNE	feet
Delay	N/A	

BORING LOCATION:

Elevation (feet)	Depth, (feet)	Graphic Log	Sample Type	Sample No.	Recovery (inches)	MATERIAL DESCRIPTION	USCS Classification	SPT Blows per 6-inch (SS)	Moisture, %	STANDARD PENETRATION TEST DATA N in blows/ft ◎ × Moisture ◪ PL ✚ LL (0, 25, 50) STRENGTH, tsf ▲ Qu ✳ Qp (0, 2.0, 4.0)	Additional Remarks
	0					ASPHALT: 5-1/2 Inches	ASPHALT				
						Brown Very Loose to Loose Fine-Grained SAND with Silt	SP-SM	N=10			
								N=5			
						Tan/Brown Very Loose to Loose Fine-Grained SAND	SP				
	5							N=4			
								N=5			
								N=6			
	10					Boring Terminated at 10 Feet					

intertek psi

Professional Service Industries, Inc.
175 S. "A" Street
Pensacola, FL 32502
Telephone: (850) 434-1000

PROJECT NO.: 07832578
PROJECT: VPS Airport Expansion
LOCATION: Valparaiso, Florida

The stratification lines represent approximate boundaries. The transition may be gradual.

BORING B-14

DATE STARTED:	7/30/18	**DRILL COMPANY:**	ERG, Inc.
DATE COMPLETED:	7/30/18	**DRILLER:** BK	**LOGGED BY:** PDK
COMPLETION DEPTH	10.0 ft	**DRILL RIG:**	Kinco
BENCHMARK:	N/A	**DRILLING METHOD:**	Solid Flight Auger
ELEVATION:	N/A	**SAMPLING METHOD:**	2-in SS
LATITUDE:		**HAMMER TYPE:**	Safety
LONGITUDE:		**EFFICIENCY**	N/A
STATION: N/A	**OFFSET:** N/A	**REVIEWED BY:**	

Water

While Drilling	GNE	feet
Upon Completion	GNE	feet
Delay		N/A

BORING LOCATION:

REMARKS: *GNE = Groundwater Not Encountered

Elevation (feet)	Depth, (feet)	Material Description	USCS Classification	SPT Blows per 6-inch (SS)
	0	Brown Loose to Medium Dense Fine-Grained SAND with Silt	SP-SM	N=12 N=10
	5	Tan/Brown Loose Fine-Grained SAND	SP	N=5 N=6 N=8
	10	Boring Terminated at 10 Feet		

Graphic Log | Sample Type | Sample No. | Recovery (inches)

Moisture, %

STANDARD PENETRATION TEST DATA
N in blows/ft ◎
× Moisture ◪ PL ✚ LL
0 25 50
STRENGTH, tsf
▲ Qu ✳ Qp
0 2.0 4.0

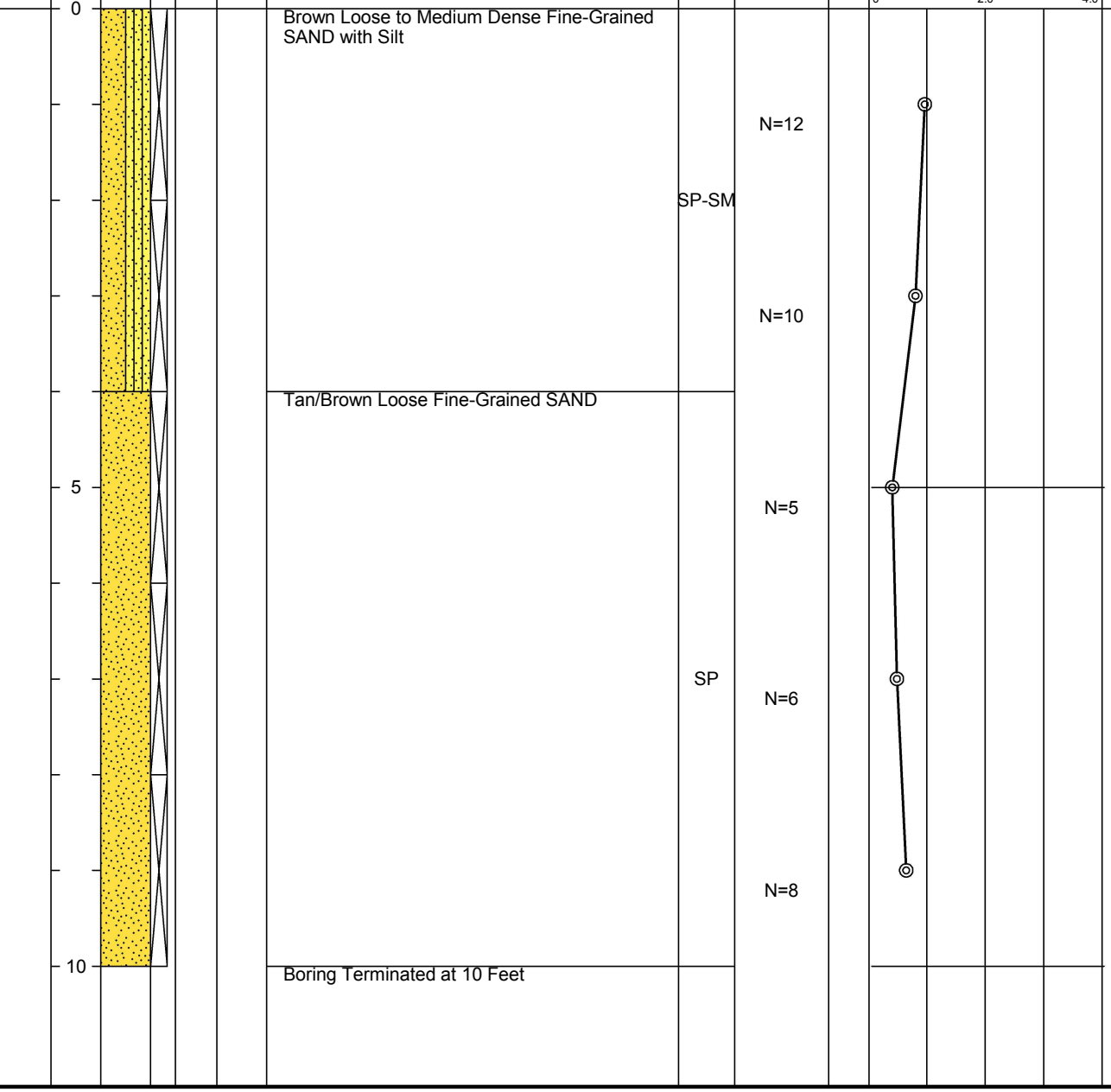

Additional Remarks

intertek psi

Professional Service Industries, Inc.
175 S. "A" Street
Pensacola, FL 32502
Telephone: (850) 434-1000

PROJECT NO.: 07832578
PROJECT: VPS Airport Expansion
LOCATION: Valparaiso, Florida

The stratification lines represent approximate boundaries. The transition may be gradual.

BORING B-15

DATE STARTED:	7/30/18	**DRILL COMPANY:**	ERG, Inc.
DATE COMPLETED:	7/30/18	**DRILLER:** BK	**LOGGED BY:** PDK
COMPLETION DEPTH	10.0 ft	**DRILL RIG:**	Kinco
BENCHMARK:	N/A	**DRILLING METHOD:**	Solid Flight Auger
ELEVATION:	N/A	**SAMPLING METHOD:**	2-in SS
LATITUDE:		**HAMMER TYPE:**	Safety
LONGITUDE:		**EFFICIENCY**	N/A
STATION: N/A	**OFFSET:** N/A	**REVIEWED BY:**	

REMARKS: *GNE = Groundwater Not Encountered

Water

While Drilling	GNE	feet
Upon Completion	GNE	feet
Delay	N/A	

BORING LOCATION:

Elevation (feet)	Depth, (feet)	Graphic Log	Sample Type	Sample No.	Recovery (inches)	MATERIAL DESCRIPTION	USCS Classification	SPT Blows per 6-inch (SS)	Moisture, %	STANDARD PENETRATION TEST DATA N in blows/ft ◎ × Moisture ◪ PL ✚ LL (0, 25, 50) STRENGTH, tsf ▲ Qu ✳ Qp (0, 2.0, 4.0)	Additional Remarks
	0					Brown Loose to Medium Dense Fine-Grained SAND with Silt	SP-SM	N=12			
								N=9			
						Tan/Brown Loose Fine-Grained SAND					
	5						SP	N=6			
								N=5			
								N=8			
	10					Boring Terminated at 10 Feet					

intertek psi

Professional Service Industries, Inc.
175 S. "A" Street
Pensacola, FL 32502
Telephone: (850) 434-1000

PROJECT NO.: 07832578
PROJECT: VPS Airport Expansion
LOCATION: Valparaiso, Florida

The stratification lines represent approximate boundaries. The transition may be gradual.

BORING B-16

DATE STARTED:	7/30/18	**DRILL COMPANY:**	ERG, Inc.
DATE COMPLETED:	7/30/18	**DRILLER:** BK	**LOGGED BY:** PDK
COMPLETION DEPTH	10.0 ft	**DRILL RIG:**	Kinco
BENCHMARK:	N/A	**DRILLING METHOD:**	Solid Flight Auger
ELEVATION:	N/A	**SAMPLING METHOD:**	2-in SS
LATITUDE:		**HAMMER TYPE:**	Safety
LONGITUDE:		**EFFICIENCY**	N/A
STATION: N/A	**OFFSET:** N/A	**REVIEWED BY:**	

Water

While Drilling	GNE	feet
Upon Completion	GNE	feet
Delay		N/A

BORING LOCATION:

REMARKS: *GNE = Groundwater Not Encountered

Elevation (feet)	Depth, (feet)	Material Description	USCS Classification	SPT Blows per 6-inch (SS)	Moisture, %	Additional Remarks
	0	Brown Very Loose to Loose Fine-Grained SAND with Silt	SP-SM	N=7		
				N=4		
		Tan/Brown Loose Fine-Grained SAND	SP	N=5	4	
	5			N=6		
				N=9		
	10	Boring Terminated at 10 Feet				

STANDARD PENETRATION TEST DATA
N in blows/ft ◎
× Moisture ◪ PL ✚ LL
0 25 50
STRENGTH, tsf
▲ Qu ✳ Qp
0 2.0 4.0

intertek psi

Professional Service Industries, Inc.
175 S. "A" Street
Pensacola, FL 32502
Telephone: (850) 434-1000

PROJECT NO.: 07832578
PROJECT: VPS Airport Expansion
LOCATION: Valparaiso, Florida

The stratification lines represent approximate boundaries. The transition may be gradual.

BORING B-17

DATE STARTED:	7/30/18	**DRILL COMPANY:**	ERG, Inc.
DATE COMPLETED:	7/30/18	**DRILLER:** BK	**LOGGED BY:** PDK
COMPLETION DEPTH	10.0 ft	**DRILL RIG:**	Kinco
BENCHMARK:	N/A	**DRILLING METHOD:**	Solid Flight Auger
ELEVATION:	N/A	**SAMPLING METHOD:**	2-in SS
LATITUDE:		**HAMMER TYPE:**	Safety
LONGITUDE:		**EFFICIENCY**	N/A
STATION: N/A	**OFFSET:** N/A	**REVIEWED BY:**	

REMARKS: *GNE = Groundwater Not Encountered

Water

While Drilling	GNE	feet
Upon Completion	GNE	feet
Delay	N/A	

BORING LOCATION:

Elevation (feet)	Depth, (feet)	Graphic Log	Sample Type	Sample No.	Recovery (inches)	MATERIAL DESCRIPTION	USCS Classification	SPT Blows per 6-inch (SS)	Moisture, %	STANDARD PENETRATION TEST DATA N in blows/ft ◎ × Moisture ◪ PL ✚ LL (0, 25, 50) STRENGTH, tsf ▲ Qu ✳ Qp (0, 2.0, 4.0)	Additional Remarks
	0					Brown Loose Fine-Grained SAND with Silt	SP-SM	N=9 N=6			
	5					Tan/Brown Loose Fine-Grained SAND	SP	N=5 N=7	3	×	
	10					Boring Terminated at 10 Feet		N=10			

intertek psi

Professional Service Industries, Inc.
175 S. "A" Street
Pensacola, FL 32502
Telephone: (850) 434-1000

PROJECT NO.: 07832578
PROJECT: VPS Airport Expansion
LOCATION: Valparaiso, Florida

The stratification lines represent approximate boundaries. The transition may be gradual.

BORING B-18

DATE STARTED:	7/30/18	**DRILL COMPANY:**	ERG, Inc.
DATE COMPLETED:	7/30/18	**DRILLER:** BK	**LOGGED BY:** PDK
COMPLETION DEPTH	10.0 ft	**DRILL RIG:**	Kinco
BENCHMARK:	N/A	**DRILLING METHOD:**	Solid Flight Auger
ELEVATION:	N/A	**SAMPLING METHOD:**	2-in SS
LATITUDE:		**HAMMER TYPE:**	Safety
LONGITUDE:		**EFFICIENCY**	N/A
STATION: N/A	**OFFSET:** N/A	**REVIEWED BY:**	

REMARKS: *GNE = Groundwater Not Encountered

Water

While Drilling	GNE	feet
Upon Completion	GNE	feet
Delay	N/A	

BORING LOCATION:

Elevation (feet)	Depth, (feet)	Graphic Log	Sample Type	Sample No.	Recovery (inches)	MATERIAL DESCRIPTION	USCS Classification	SPT Blows per 6-inch (SS)	Moisture, %	STANDARD PENETRATION TEST DATA N in blows/ft ◎ × Moisture ◪ PL ✚ LL 0 25 50 STRENGTH, tsf ▲ Qu ✳ Qp 0 2.0 4.0	Additional Remarks
	0					Brown Very Loose to Loose Fine-Grained SAND with Silt	SP-SM	N=5			
								N=3			
	5					Tan/Brown Loose to Medium Dense Fine-Grained SAND	SP	N=5			
								N=7			
	10					Boring Terminated at 10 Feet		N=11			

intertek psi

Professional Service Industries, Inc.
175 S. "A" Street
Pensacola, FL 32502
Telephone: (850) 434-1000

PROJECT NO.: 07832578
PROJECT: VPS Airport Expansion
LOCATION: Valparaiso, Florida

The stratification lines represent approximate boundaries. The transition may be gradual.

BORING C-02

DATE STARTED:	8/1/18	**DRILL COMPANY:**	PSI, Inc.
DATE COMPLETED:	8/1/18	**DRILLER:** TC	**LOGGED BY:** PDK
COMPLETION DEPTH	5.0 ft	**DRILL RIG:**	Hand Auger
BENCHMARK:	N/A	**DRILLING METHOD:**	Hand Auger
ELEVATION:	N/A	**SAMPLING METHOD:**	
LATITUDE:		**HAMMER TYPE:**	
LONGITUDE:		**EFFICIENCY**	N/A
STATION: N/A	**OFFSET:** N/A	**REVIEWED BY:**	

REMARKS: *GNE = Groundwater Not Encountered

Water

While Drilling	GNE	feet
Upon Completion	GNE	feet
Delay	N/A	

BORING LOCATION:

Elevation (feet)	Depth, (feet)	Graphic Log	Sample Type	Sample No.	Recovery (inches)	MATERIAL DESCRIPTION	USCS Classification	Moisture, %	STANDARD PENETRATION TEST DATA N in blows/ft ◎ × Moisture ◪ PL ✚ LL (0, 25, 50) STRENGTH, tsf ▲ Qu ✳ Qp (0, 2.0, 4.0)	Additional Remarks
	0					ASPHALT: 3 Inches	ASPHALT			
						GRAVEL BASE: 6 Inches	BASE			
						Brown Fine-Grained SAND with Silt	SP-SM			
	5					Boring Terminated at 5 Feet				

intertek psi

Professional Service Industries, Inc.
175 S. "A" Street
Pensacola, FL 32502
Telephone: (850) 434-1000

PROJECT NO.: 07832578
PROJECT: VPS Airport Expansion
LOCATION: Valparaiso, Florida

The stratification lines represent approximate boundaries. The transition may be gradual.

BORING C-03

DATE STARTED:	8/1/18	**DRILL COMPANY:**	PSI, Inc.
DATE COMPLETED:	8/1/18	**DRILLER:** TC	**LOGGED BY:** PDK
COMPLETION DEPTH	5.0 ft	**DRILL RIG:**	Hand Auger
BENCHMARK:	N/A	**DRILLING METHOD:**	Hand Auger
ELEVATION:	N/A	**SAMPLING METHOD:**	
LATITUDE:		**HAMMER TYPE:**	
LONGITUDE:		**EFFICIENCY**	N/A
STATION: N/A	**OFFSET:** N/A	**REVIEWED BY:**	

REMARKS: *GNE = Groundwater Not Encountered

Water

While Drilling	GNE	feet
Upon Completion	GNE	feet
Delay	N/A	

BORING LOCATION:

Elevation (feet)	Depth, (feet)	Graphic Log	Sample Type	Sample No.	Recovery (inches)	MATERIAL DESCRIPTION	USCS Classification	Moisture, %	STANDARD PENETRATION TEST DATA N in blows/ft ◎ × Moisture ◪ PL ✚ LL (0, 25, 50) STRENGTH, tsf ▲ Qu ✳ Qp (0, 2.0, 4.0)	Additional Remarks
	0					ASPHALT: 3 Inches	ASPHALT			
						GRAVEL BASE: 6 Inches	BASE			
						Brown Fine-Grained SAND with Silt	SP-SM			
	5					Boring Terminated at 5 Feet				

intertek psi

Professional Service Industries, Inc.
175 S. "A" Street
Pensacola, FL 32502
Telephone: (850) 434-1000

PROJECT NO.: 07832578
PROJECT: VPS Airport Expansion
LOCATION: Valparaiso, Florida

The stratification lines represent approximate boundaries. The transition may be gradual.

BORING C-04

DATE STARTED:	8/1/18	**DRILL COMPANY:**	PSI, Inc.
DATE COMPLETED:	8/1/18	**DRILLER:** TC	**LOGGED BY:** PDK
COMPLETION DEPTH	5.0 ft	**DRILL RIG:**	Hand Auger
BENCHMARK:	N/A	**DRILLING METHOD:**	Hand Auger
ELEVATION:	N/A	**SAMPLING METHOD:**	
LATITUDE:		**HAMMER TYPE:**	
LONGITUDE:		**EFFICIENCY**	N/A
STATION: N/A	**OFFSET:** N/A	**REVIEWED BY:**	

REMARKS: *GNE = Groundwater Not Encountered

Water		
	While Drilling	GNE feet
	Upon Completion	GNE feet
	Delay	N/A

BORING LOCATION:

Elevation (feet)	Depth, (feet)	Graphic Log	Sample Type	Sample No.	Recovery (inches)	MATERIAL DESCRIPTION	USCS Classification	Moisture, %	STANDARD PENETRATION TEST DATA N in blows/ft ◎ × Moisture ◪ PL ✚ LL (0, 25, 50) STRENGTH, tsf ▲ Qu ✳ Qp (0, 2.0, 4.0)	Additional Remarks
	0					ASPHALT: 3 Inches	ASPHALT			
						GRAVEL BASE: 4 Inches	BASE			
						Brown Fine-Grained SAND with Silt	SP-SM			
	5					Boring Terminated at 5 Feet				

intertek psi

Professional Service Industries, Inc.
175 S. "A" Street
Pensacola, FL 32502
Telephone: (850) 434-1000

PROJECT NO.: 07832578
PROJECT: VPS Airport Expansion
LOCATION: Valparaiso, Florida

The stratification lines represent approximate boundaries. The transition may be gradual.

BORING C-05

DATE STARTED:	8/1/18	**DRILL COMPANY:**	PSI, Inc.
DATE COMPLETED:	8/1/18	**DRILLER:** TC	**LOGGED BY:** PDK
COMPLETION DEPTH	5.0 ft	**DRILL RIG:**	Hand Auger
BENCHMARK:	N/A	**DRILLING METHOD:**	Hand Auger
ELEVATION:	N/A	**SAMPLING METHOD:**	
LATITUDE:		**HAMMER TYPE:**	
LONGITUDE:		**EFFICIENCY**	N/A
STATION: N/A	**OFFSET:** N/A	**REVIEWED BY:**	

REMARKS: *GNE = Groundwater Not Encountered

Water

While Drilling	GNE	feet
Upon Completion	GNE	feet
Delay		N/A

BORING LOCATION:

Elevation (feet)	Depth, (feet)	Graphic Log	Sample Type	Sample No.	Recovery (inches)	MATERIAL DESCRIPTION	USCS Classification	Moisture, %	STANDARD PENETRATION TEST DATA N in blows/ft ◎ × Moisture ◪ PL ✚ LL (0 / 25 / 50) STRENGTH, tsf ▲ Qu ✳ Qp (0 / 2.0 / 4.0)	Additional Remarks
	0					ASPHALT: 3 Inches	ASPHALT			
						GRAVEL BASE: 5 Inches	BASE			
						Brown Fine-Grained SAND with Silt	SP-SM			
	5					Boring Terminated at 5 Feet				

intertek psi

Professional Service Industries, Inc.
175 S. "A" Street
Pensacola, FL 32502
Telephone: (850) 434-1000

PROJECT NO.: 07832578
PROJECT: VPS Airport Expansion
LOCATION: Valparaiso, Florida

The stratification lines represent approximate boundaries. The transition may be gradual.

BORING C-06

DATE STARTED:	8/2/18	**DRILL COMPANY:**	PSI, Inc.
DATE COMPLETED:	8/2/18	**DRILLER:** TC	**LOGGED BY:** PDK
COMPLETION DEPTH	5.0 ft	**DRILL RIG:**	Hand Auger
BENCHMARK:	N/A	**DRILLING METHOD:**	Hand Auger
ELEVATION:	N/A	**SAMPLING METHOD:**	
LATITUDE:		**HAMMER TYPE:**	
LONGITUDE:		**EFFICIENCY**	N/A
STATION: N/A	**OFFSET:** N/A	**REVIEWED BY:**	

REMARKS: *GNE = Groundwater Not Encountered

Water

While Drilling	GNE	feet
Upon Completion	GNE	feet
Delay		N/A

BORING LOCATION:

Elevation (feet)	Depth, (feet)	Graphic Log	Sample Type	Sample No.	Recovery (inches)	MATERIAL DESCRIPTION	USCS Classification	Moisture, %	STANDARD PENETRATION TEST DATA N in blows/ft ◎ × Moisture ◪ PL ✚ LL (0, 25, 50) STRENGTH, tsf ▲ Qu ✳ Qp (0, 2.0, 4.0)	Additional Remarks
	0					ASPHALT: 8 Inches	ASPHALT			
						GRAVEL BASE: 7 Inches	BASE			
						Brown Fine-Grained SAND with Silt	SP-SM			
	5					Boring Terminated at 5 Feet				

intertek psi

Professional Service Industries, Inc.
175 S. "A" Street
Pensacola, FL 32502
Telephone: (850) 434-1000

PROJECT NO.: 07832578
PROJECT: VPS Airport Expansion
LOCATION: Valparaiso, Florida

The stratification lines represent approximate boundaries. The transition may be gradual.

BORING C-07

DATE STARTED:	8/2/18	**DRILL COMPANY:**	PSI, Inc.
DATE COMPLETED:	8/2/18	**DRILLER:** TC	**LOGGED BY:** PDK
COMPLETION DEPTH	5.0 ft	**DRILL RIG:**	Hand Auger
BENCHMARK:	N/A	**DRILLING METHOD:**	Hand Auger
ELEVATION:	N/A	**SAMPLING METHOD:**	
LATITUDE:		**HAMMER TYPE:**	
LONGITUDE:		**EFFICIENCY**	N/A
STATION: N/A	**OFFSET:** N/A	**REVIEWED BY:**	

REMARKS: *GNE = Groundwater Not Encountered

Water

While Drilling	GNE	feet
Upon Completion	GNE	feet
Delay		N/A

BORING LOCATION:

Elevation (feet)	Depth, (feet)	Graphic Log	Sample Type	Sample No.	Recovery (inches)	MATERIAL DESCRIPTION	USCS Classification	Moisture, %	STANDARD PENETRATION TEST DATA N in blows/ft ◎ × Moisture ◪ PL ✚ LL (0, 25, 50) STRENGTH, tsf ▲ Qu ✳ Qp (0, 2.0, 4.0)	Additional Remarks
	0					ASPHALT: 7.5 Inches	ASPHALT			
						GRAVEL BASE: 6 Inches	BASE			
						Brown Fine-Grained SAND with Silt	SP-SM			
	5					Boring Terminated at 5 Feet				

intertek psi

Professional Service Industries, Inc.
175 S. "A" Street
Pensacola, FL 32502
Telephone: (850) 434-1000

PROJECT NO.: 07832578
PROJECT: VPS Airport Expansion
LOCATION: Valparaiso
Florida

The stratification lines represent approximate boundaries. The transition may be gradual.

BORING C-08

DATE STARTED:	8/2/18	**DRILL COMPANY:**	PSI, Inc.
DATE COMPLETED:	8/2/18	**DRILLER:** TC	**LOGGED BY:** PDK
COMPLETION DEPTH	5.0 ft	**DRILL RIG:**	Hand Auger
BENCHMARK:	N/A	**DRILLING METHOD:**	Hand Auger
ELEVATION:	N/A	**SAMPLING METHOD:**	
LATITUDE:		**HAMMER TYPE:**	
LONGITUDE:		**EFFICIENCY**	N/A
STATION: N/A	**OFFSET:** N/A	**REVIEWED BY:**	

REMARKS: *GNE = Groundwater Not Encountered

Water

While Drilling	GNE	feet
Upon Completion	GNE	feet
Delay		N/A

BORING LOCATION:

Elevation (feet)	Depth, (feet)	Graphic Log	Sample Type	Sample No.	Recovery (inches)	MATERIAL DESCRIPTION	USCS Classification	Moisture, %	STANDARD PENETRATION TEST DATA N in blows/ft ◎ × Moisture ◪ PL ✚ LL (0, 25, 50) STRENGTH, tsf ▲ Qu ✳ Qp (0, 2.0, 4.0)	Additional Remarks
	0					ASPHALT: 7.5 Inches	ASPHALT			
						GRAVEL BASE: 6 Inches	BASE			
						Brown Fine-Grained SAND with Silt	SP-SM			
	5					Boring Terminated at 5 Feet				

intertek psi

Professional Service Industries, Inc.
175 S. "A" Street
Pensacola, FL 32502
Telephone: (850) 434-1000

PROJECT NO.: 07832578
PROJECT: VPS Airport Expansion
LOCATION: Valparaiso, Florida

The stratification lines represent approximate boundaries. The transition may be gradual.

BORING C-09

DATE STARTED:	8/2/18	**DRILL COMPANY:**	PSI, Inc.
DATE COMPLETED:	8/2/18	**DRILLER:** TC	**LOGGED BY:** PDK
COMPLETION DEPTH	5.0 ft	**DRILL RIG:**	Hand Auger
BENCHMARK:	N/A	**DRILLING METHOD:**	Hand Auger
ELEVATION:	N/A	**SAMPLING METHOD:**	
LATITUDE:		**HAMMER TYPE:**	
LONGITUDE:		**EFFICIENCY**	N/A
STATION: N/A	**OFFSET:** N/A	**REVIEWED BY:**	

REMARKS: *GNE = Groundwater Not Encountered

Water

While Drilling	GNE	feet
Upon Completion	GNE	feet
Delay	N/A	

BORING LOCATION:

Elevation (feet)	Depth, (feet)	Graphic Log	Sample Type	Sample No.	Recovery (inches)	MATERIAL DESCRIPTION	USCS Classification	Moisture, %	STANDARD PENETRATION TEST DATA N in blows/ft ◎ × Moisture ◪ PL ✚ LL (0, 25, 50) STRENGTH, tsf ▲ Qu ✳ Qp (0, 2.0, 4.0)	Additional Remarks
	0					ASPHALT: 16 Inches	ASPHALT			
						GRAVEL BASE: 10 Inches	BASE			
						Brown Fine-Grained SAND with Silt	SP-SM			
	5					Boring Terminated at 5 Feet				

intertek psi

Professional Service Industries, Inc.
175 S. "A" Street
Pensacola, FL 32502
Telephone: (850) 434-1000

PROJECT NO.: 07832578
PROJECT: VPS Airport Expansion
LOCATION: Valparaiso, Florida

The stratification lines represent approximate boundaries. The transition may be gradual.

BORING C-10

DATE STARTED:	8/2/18	**DRILL COMPANY:**	PSI, Inc.
DATE COMPLETED:	8/2/18	**DRILLER:** TC	**LOGGED BY:** PDK
COMPLETION DEPTH	5.0 ft	**DRILL RIG:**	Hand Auger
BENCHMARK:	N/A	**DRILLING METHOD:**	Hand Auger
ELEVATION:	N/A	**SAMPLING METHOD:**	
LATITUDE:		**HAMMER TYPE:**	
LONGITUDE:		**EFFICIENCY**	N/A
STATION: N/A	**OFFSET:** N/A	**REVIEWED BY:**	

REMARKS: *GNE = Groundwater Not Encountered

Water

While Drilling	GNE	feet
Upon Completion	GNE	feet
Delay		N/A

BORING LOCATION:

Elevation (feet)	Depth, (feet)	Graphic Log	Sample Type	Sample No.	Recovery (inches)	MATERIAL DESCRIPTION	USCS Classification	Moisture, %	STANDARD PENETRATION TEST DATA N in blows/ft ◎ × Moisture ◪ PL ✚ LL (0, 25, 50) STRENGTH, tsf ▲ Qu ✳ Qp (0, 2.0, 4.0)	Additional Remarks
	0					ASPHALT: 9 Inches	ASPHALT			
						GRAVEL BASE: 8 Inches	BASE			
						Brown Fine-Grained SAND with Silt	SP-SM			
	5					Boring Terminated at 5 Feet				

intertek psi
Professional Service Industries, Inc.
175 S. "A" Street
Pensacola, FL 32502
Telephone: (850) 434-1000

PROJECT NO.: 07832578
PROJECT: VPS Airport Expansion
LOCATION: Valparaiso, Florida

The stratification lines represent approximate boundaries. The transition may be gradual.

BORING C-11

DATE STARTED:	8/2/18	**DRILL COMPANY:**	PSI, Inc.
DATE COMPLETED:	8/2/18	**DRILLER:** TC	**LOGGED BY:** PDK
COMPLETION DEPTH	5.0 ft	**DRILL RIG:**	Hand Auger
BENCHMARK:	N/A	**DRILLING METHOD:**	Hand Auger
ELEVATION:	N/A	**SAMPLING METHOD:**	
LATITUDE:		**HAMMER TYPE:**	
LONGITUDE:		**EFFICIENCY**	N/A
STATION: N/A	**OFFSET:** N/A	**REVIEWED BY:**	

REMARKS: *GNE = Groundwater Not Encountered

Water

While Drilling	GNE	feet
Upon Completion	GNE	feet
Delay		N/A

BORING LOCATION:

Elevation (feet)	Depth, (feet)	Graphic Log	Sample Type	Sample No.	Recovery (inches)	MATERIAL DESCRIPTION	USCS Classification	Moisture, %	STANDARD PENETRATION TEST DATA N in blows/ft ◎ × Moisture ◪ PL ✚ LL (0, 25, 50) STRENGTH, tsf ▲ Qu ✳ Qp (0, 2.0, 4.0)	Additional Remarks
	0					ASPHALT: 9 Inches	ASPHALT			
						CONCRETE: 4.5 Inches	CONCRETE			
						GRAVEL BASE: 6.5 Inches	BASE			
						Brown Fine-Grained SAND with Silt	SP-SM			
	5					Boring Terminated at 5 Feet				

intertek psi

Professional Service Industries, Inc.
175 S. "A" Street
Pensacola, FL 32502
Telephone: (850) 434-1000

PROJECT NO.: 07832578
PROJECT: VPS Airport Expansion
LOCATION: Valparaiso, Florida

The stratification lines represent approximate boundaries. The transition may be gradual.

BORING C-12

DATE STARTED:	8/2/18	**DRILL COMPANY:**	PSI, Inc.
DATE COMPLETED:	8/2/18	**DRILLER:** TC	**LOGGED BY:** PDK
COMPLETION DEPTH	5.0 ft	**DRILL RIG:**	Hand Auger
BENCHMARK:	N/A	**DRILLING METHOD:**	Hand Auger
ELEVATION:	N/A	**SAMPLING METHOD:**	
LATITUDE:		**HAMMER TYPE:**	
LONGITUDE:		**EFFICIENCY**	N/A
STATION: N/A	**OFFSET:** N/A	**REVIEWED BY:**	

REMARKS: *GNE = Groundwater Not Encountered

Water

While Drilling	GNE	feet
Upon Completion	GNE	feet
Delay		N/A

BORING LOCATION:

Elevation (feet)	Depth, (feet)	Graphic Log	Sample Type	Sample No.	Recovery (inches)	MATERIAL DESCRIPTION	USCS Classification	Moisture, %	STANDARD PENETRATION TEST DATA N in blows/ft ◎ × Moisture ◪ PL ✚ LL (0, 25, 50) STRENGTH, tsf ▲ Qu ✳ Qp (0, 2.0, 4.0)	Additional Remarks
	0					ASPHALT: 9.5 Inches	ASPHALT			
						GRAVEL BASE: 7.5 Inches	BASE			
						Brown Fine-Grained SAND with Silt	SP-SM			
	5					Boring Terminated at 5 Feet				

intertek psi

Professional Service Industries, Inc.
175 S. "A" Street
Pensacola, FL 32502
Telephone: (850) 434-1000

PROJECT NO.: 07832578
PROJECT: VPS Airport Expansion
LOCATION: Valparaiso, Florida

The stratification lines represent approximate boundaries. The transition may be gradual.

BORING C-13

DATE STARTED:	8/2/18	**DRILL COMPANY:**	PSI, Inc.
DATE COMPLETED:	8/2/18	**DRILLER:** TC	**LOGGED BY:** PDK
COMPLETION DEPTH	5.0 ft	**DRILL RIG:**	Hand Auger
BENCHMARK:	N/A	**DRILLING METHOD:**	Hand Auger
ELEVATION:	N/A	**SAMPLING METHOD:**	
LATITUDE:		**HAMMER TYPE:**	
LONGITUDE:		**EFFICIENCY**	N/A
STATION: N/A	**OFFSET:** N/A	**REVIEWED BY:**	

REMARKS: *GNE = Groundwater Not Encountered

Water

While Drilling	GNE	feet
Upon Completion	GNE	feet
Delay	N/A	

BORING LOCATION:

Elevation (feet)	Depth, (feet)	Graphic Log	Sample Type	Sample No.	Recovery (inches)	MATERIAL DESCRIPTION	USCS Classification	Moisture, %	STANDARD PENETRATION TEST DATA N in blows/ft ◎ × Moisture ◪ PL ✚ LL (0, 25, 50) STRENGTH, tsf ▲ Qu ✳ Qp (0, 2.0, 4.0)	Additional Remarks
	0					ASPHALT: 8 Inches	ASPHALT			
						CONCRETE: 6.5 Inches	CONCRETE			
						ASPHALT: 6 Inches	ASPHALT			
						GRAVEL BASE: 5.5 Inches	BASE			
						Brown Fine-Grained SAND with Silt	SP-SM			
	5					Boring Terminated at 5 Feet				

intertek psi

Professional Service Industries, Inc.
175 S. "A" Street
Pensacola, FL 32502
Telephone: (850) 434-1000

PROJECT NO.: 07832578
PROJECT: VPS Airport Expansion
LOCATION: Valparaiso
Florida

The stratification lines represent approximate boundaries. The transition may be gradual.

Professional Service Industries, Inc.
175 S. "A" Street
Pensacola, FL 32502
Eng Certificate Of Authorization 3684
Phone: (850) 434-1000
Fax: (850) 434-7200

Report No: CBR:07832578-4-S1

California Bearing Ratio Report

Client: INFRASTRUCTURE CONSULTING **CC:**
AND
5550 W. IDLEWILD AVENUE, SUITE 102
TAMPA, FL 33634
Project: DESTIN-FWB AIRPORT EXPANSION

Sample Details

Sample ID:	07832578-4-S1	**Date Sampled:**	8/1/2018
Sampling Method:	BULK	**Source:**	NATURAL SUBGRADE
Material:	BROWN SL/SILTY SAND	**Specification:**	
Location:	B-3	**Tested By:**	
Date Tested:			

Stress vs Penetration

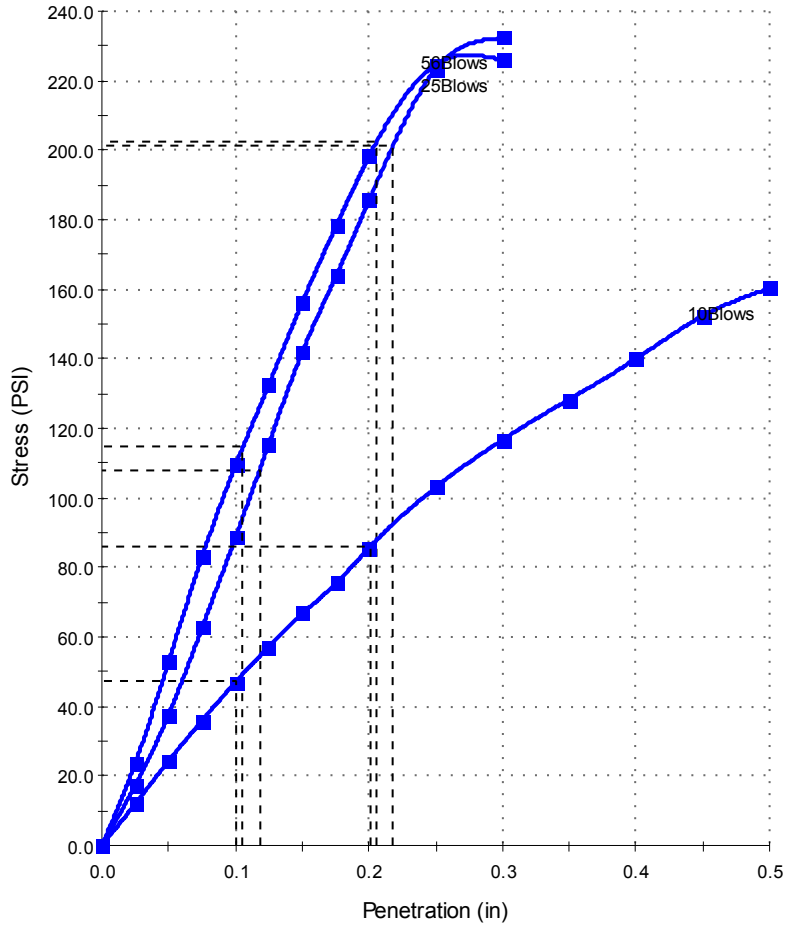

Overall Results

ASTM D 1883

Test Results

Blows	56	25	10
Comp. Eff.	ASTM D 1557	ASTM D 1557	ASTM D 1557
Initial MC (%)	10.0	9.8	9.6
MC of Top 1in (%)			
MC After (%)			
DD Before (lb/ft³)	107.24	106.17	102.24
DD After (lb/ft³)			
CBR (%)	13.4	13.5	5.7
% MDD	97.8	96.8	93.2
Sample Condition	Soaked	Soaked	Soaked
Immersion Period (hrs)	96	96	96
Surcharge (lb)	10.00	10.00	10.00
Swell (%)	0.00	0.00	0.00

CBR Vs Dry Density

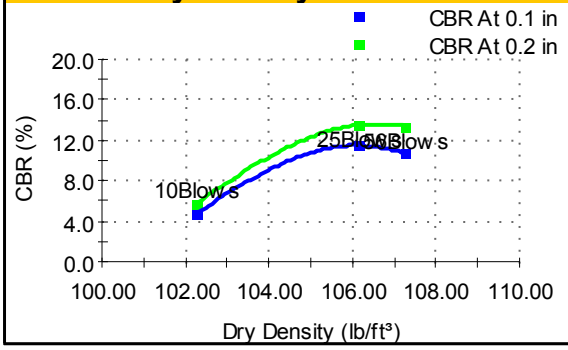

Comments

© 2000-2018 QESTLab by SpectraQEST.com

Professional Service Industries, Inc.
175 S. "A" Street
Pensacola, FL 32502
Eng Certificate Of Authorization 3684
Phone: (850) 434-1000
Fax: (850) 434-7200

Report No: PTR:07832578-4-S1

Proctor Report

Client: INFRASTRUCTURE CONSULTING **CC:**
AND
5550 W. IDLEWILD AVENUE, SUITE 102
TAMPA, FL 33634
Project: DESTIN-FWB AIRPORT EXPANSION

Sample Details

Sample ID:	07832578-4-S1	**Date Sampled:**	8/1/2018
Sampled By:	Timothy Cannada	**Specification:**	
Supplier:	Technician Pick-Up/Sampling	**Source:**	NATURAL SUBGRADE
Material:	BROWN SL/SILTY SAND	**Sampling Method:**	BULK
General Location:	B-3	**Location:**	B-3
Tested By:	Timothy Cannada	**Date Tested:**	8/8/2018

Dry Unit Weight - Water Content Relationship

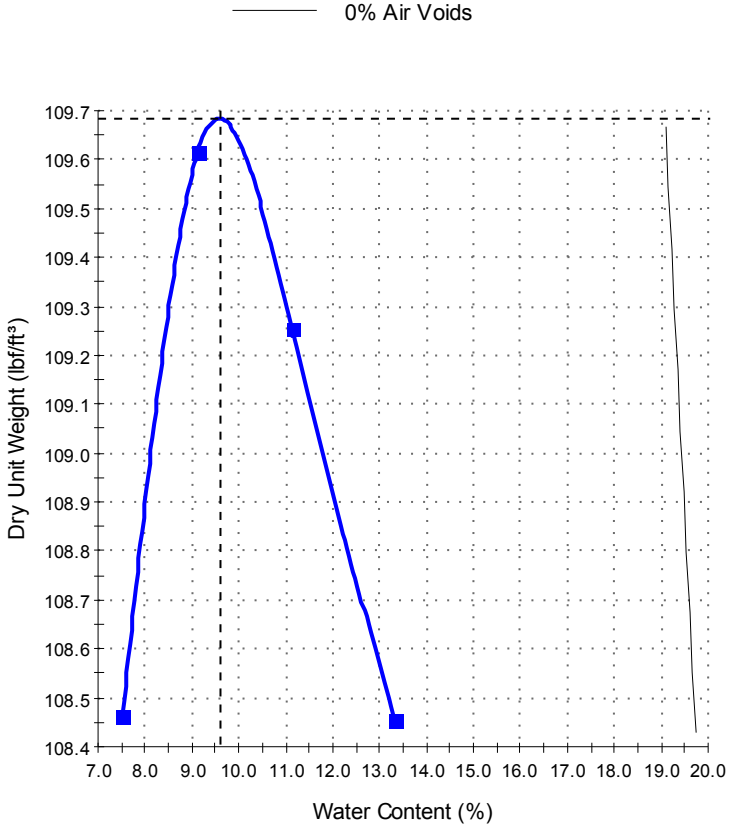

Test Results

ASTM D 1557

Maximum Dry Unit Weight (lbf/ft³):	**109.7**
Optimum Water Content (%):	**9.6**
Method:	A
Preparation Method:	Dry
Rammer Type:	Mechanical
Specific Gravity (Fines):	2.65
Specific Gravity Method:	Estimated
Retained Sieve No 4 (4.75mm) (%):	0
Passing Sieve No 4 (4.75mm) (%):	100
Tested By:	Timothy Cannada
Date Tested:	8/8/2018

Comments

© 2000-2018 QESTLab by SpectraQEST.com

Professional Service Industries, Inc.
175 S. "A" Street
Pensacola, FL 32502
Eng Certificate Of Authorization 3684
Phone: (850) 434-1000
Fax: (850) 434-7200

Report No: CBR:07832578-4-S2

California Bearing Ratio Report

Client: INFRASTRUCTURE CONSULTING **CC:**
AND
5550 W. IDLEWILD AVENUE, SUITE 102
TAMPA, FL 33634
Project: DESTIN-FWB AIRPORT EXPANSION

Sample Details

Sample ID:	07832578-4-S2	**Date Sampled:**	8/1/2018
Sampling Method:	BULK	**Source:**	NATURAL SUBGRADE
Material:	BROWN SL/SILTY SAND	**Specification:**	
Location:	B-6	**Tested By:**	
Date Tested:			

Stress vs Penetration

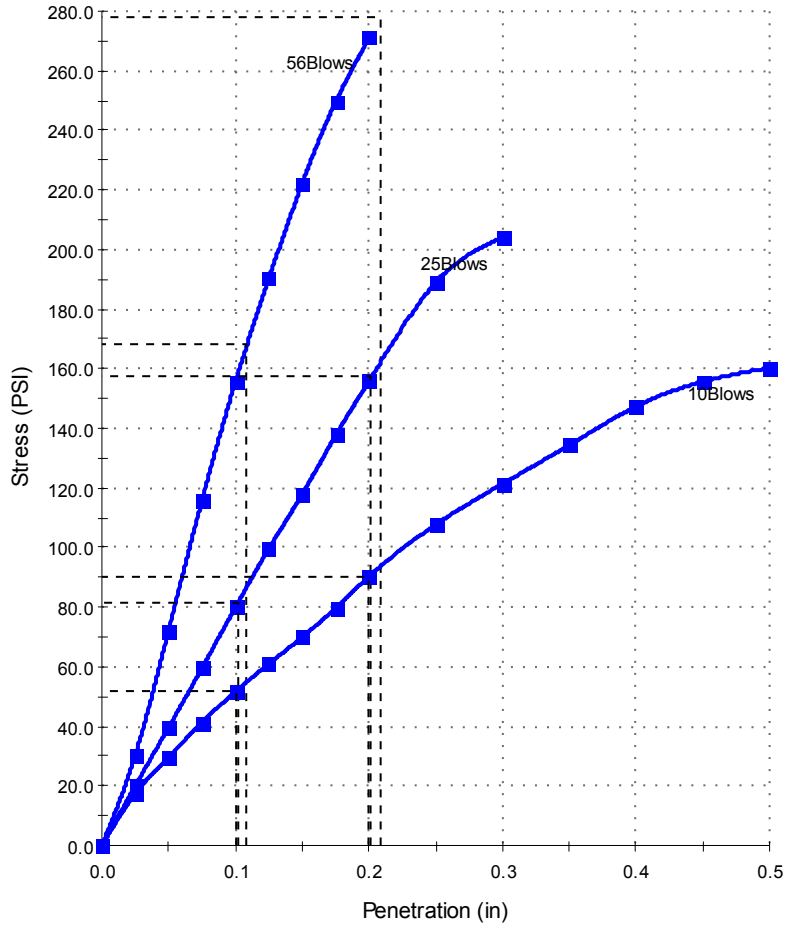

Overall Results

ASTM D 1883

Test Results

Blows	56	25	10
Comp. Eff.	ASTM D 1557	ASTM D 1557	ASTM D 1557
Initial MC (%)	10.9	10.6	11.1
MC of Top 1in (%)			
MC After (%)			
DD Before (lb/ft³)	107.88	105.74	102.77
DD After (lb/ft³)			
CBR (%)	18.5	10.5	6.0
% MDD	96.6	94.7	92.1
Sample Condition	Soaked	Soaked	Soaked
Immersion Period (hrs)	96	96	96
Surcharge (lb)	10.00	10.00	10.00
Swell (%)	0.00	0.00	0.00
Oversize (%)			0.0

CBR Vs Dry Density

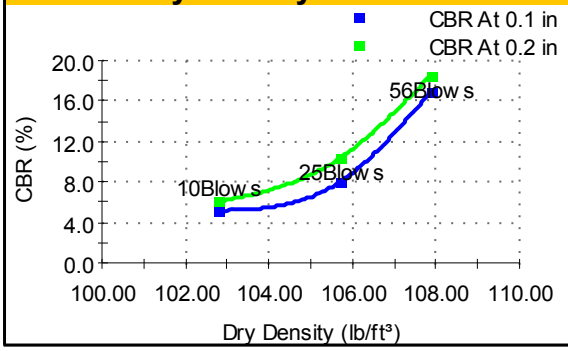

Comments

© 2000-2018 QESTLab by SpectraQEST.com

Professional Service Industries, Inc.
175 S. "A" Street
Pensacola, FL 32502
Eng Certificate Of Authorization 3684
Phone: (850) 434-1000
Fax: (850) 434-7200

Report No: PTR:07832578-4-S2

Proctor Report

Client: INFRASTRUCTURE CONSULTING **CC:**
AND
5550 W. IDLEWILD AVENUE, SUITE 102
TAMPA, FL 33634
Project: DESTIN-FWB AIRPORT EXPANSION

Sample Details

Sample ID:	07832578-4-S2	**Date Sampled:**	8/1/2018
Sampled By:	Timothy Cannada	**Specification:**	
Supplier:	Technician Pick-Up/Sampling	**Source:**	NATURAL SUBGRADE
Material:	BROWN SL/SILTY SAND	**Sampling Method:**	BULK
General Location:	B-6	**Location:**	B-6
Tested By:	Timothy Cannada	**Date Tested:**	8/9/2018

Dry Unit Weight - Water Content Relationship

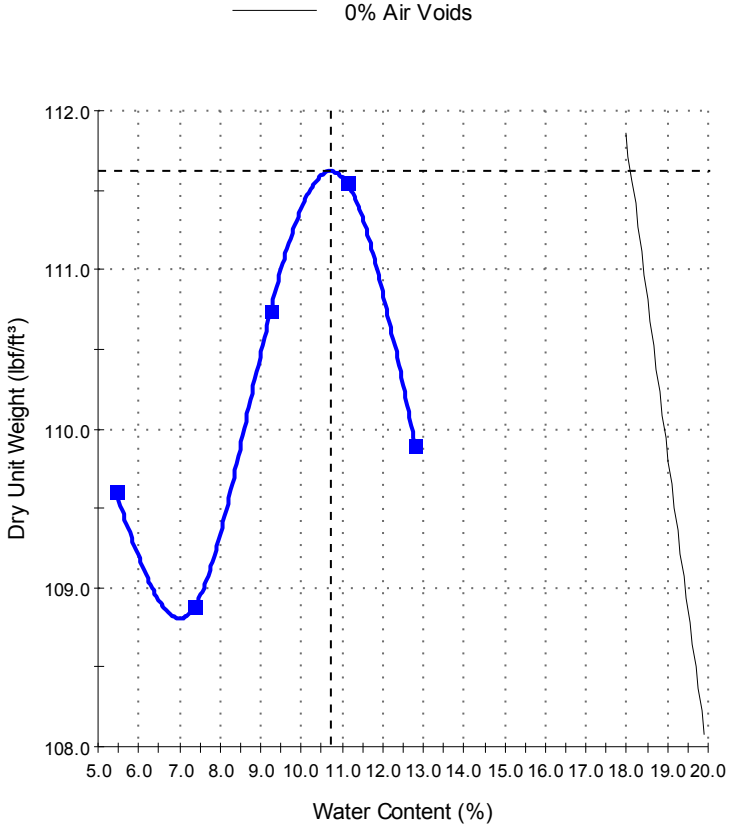

Test Results

ASTM D 1557

Maximum Dry Unit Weight (lbf/ft³):	**111.6**
Optimum Water Content (%):	**10.7**
Method:	A
Preparation Method:	Dry
Rammer Type:	Mechanical
Specific Gravity (Fines):	2.65
Specific Gravity Method:	Estimated
Retained Sieve No 4 (4.75mm) (%):	0
Passing Sieve No 4 (4.75mm) (%):	100
Tested By:	Timothy Cannada
Date Tested:	8/9/2018

Comments

© 2000-2018 QESTLab by SpectraQEST.com

Professional Service Industries, Inc.
175 S. "A" Street
Pensacola, FL 32502
Eng Certificate Of Authorization 3684
Phone: (850) 434-1000
Fax: (850) 434-7200

Report No: CBR:07832578-4-S3

California Bearing Ratio Report

Client: INFRASTRUCTURE CONSULTING **CC:**
AND
5550 W. IDLEWILD AVENUE, SUITE 102
TAMPA, FL 33634
Project: DESTIN-FWB AIRPORT EXPANSION

Sample Details

Sample ID:	07832578-4-S3	**Date Sampled:**	8/1/2018
Sampling Method:	BULK	**Source:**	NATURAL SUBGRADE
Material:	BROWN SL/SILTY SAND	**Specification:**	
Location:	B-13	**Tested By:**	
Date Tested:			

Stress vs Penetration

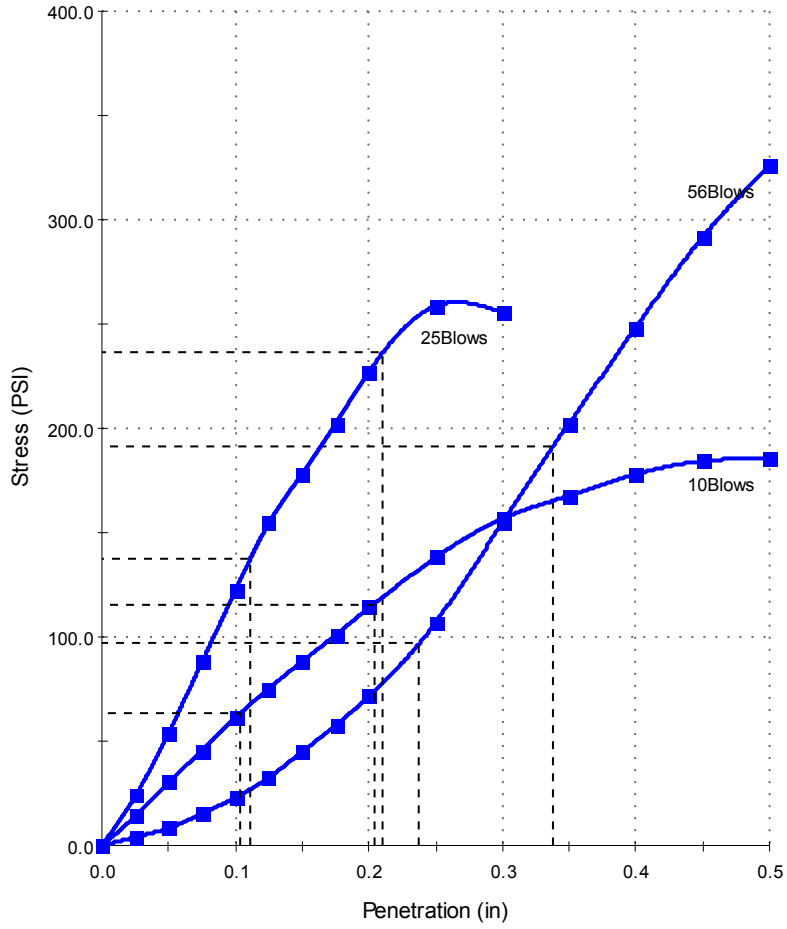

Overall Results

ASTM D 1883

Test Results

Blows	56	25	10
Comp. Eff.	ASTM D 1557	ASTM D 1557	ASTM D 1557
Initial MC (%)	11.3	11.2	11.3
MC of Top 1in (%)			
MC After (%)			
DD Before (lb/ft³)	109.98	109.38	105.38
DD After (lb/ft³)			
CBR (%)	12.7	15.8	7.7
% MDD	98.0	97.5	93.9
Sample Condition	Soaked	Soaked	Soaked
Immersion Period (hrs)	96	96	96
Surcharge (lb)		10.00	
Swell (%)	0.00	0.00	0.00

CBR Vs Dry Density

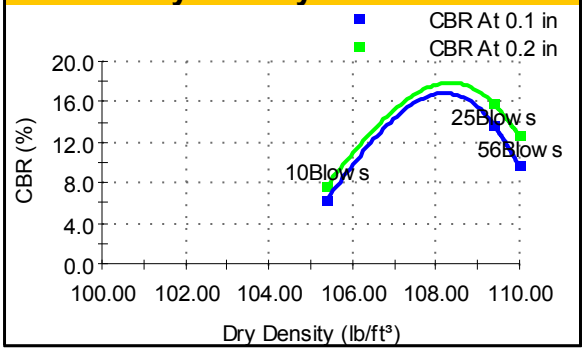

Comments

© 2000-2018 QESTLab by SpectraQEST.com

Professional Service Industries, Inc.
175 S. "A" Street
Pensacola, FL 32502
Eng Certificate Of Authorization 3684
Phone: (850) 434-1000
Fax: (850) 434-7200

Report No: PTR:07832578-4-S3

Proctor Report

Client: INFRASTRUCTURE CONSULTING **CC:**
AND
5550 W. IDLEWILD AVENUE, SUITE 102
TAMPA, FL 33634
Project: DESTIN-FWB AIRPORT EXPANSION

Sample Details

Sample ID:	07832578-4-S3	**Date Sampled:**	8/1/2018
Sampled By:	Timothy Cannada	**Specification:**	
Supplier:	Technician Pick-Up/Sampling	**Source:**	NATURAL SUBGRADE
Material:	BROWN SL/SILTY SAND	**Sampling Method:**	BULK
General Location:	B-13	**Location:**	B-13
Tested By:	Timothy Cannada	**Date Tested:**	8/10/2018

Dry Unit Weight - Water Content Relationship

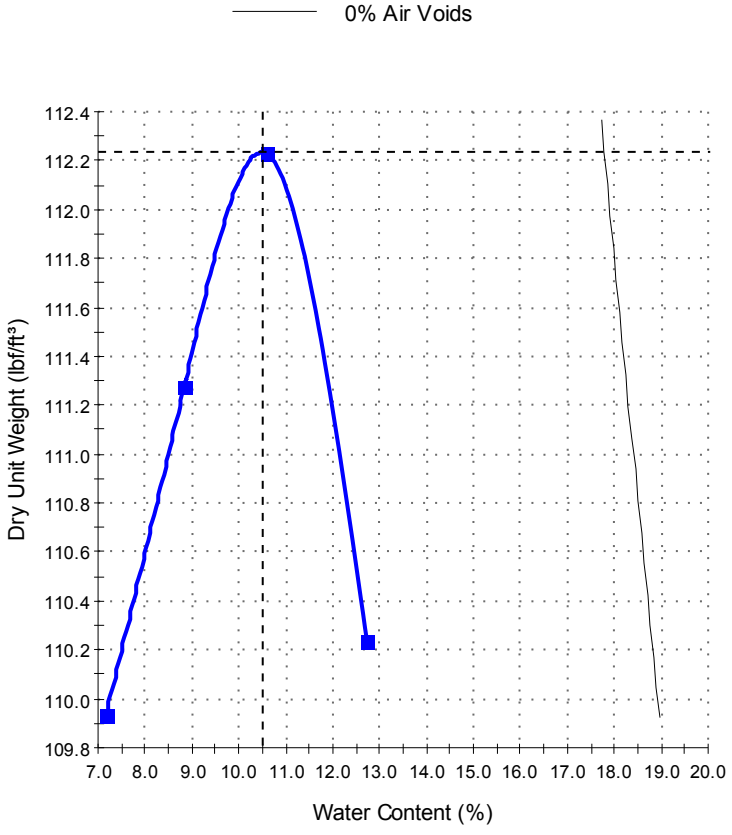

Test Results

ASTM D 1557

Maximum Dry Unit Weight (lbf/ft³):	**112.2**
Optimum Water Content (%):	**10.5**
Method:	A
Preparation Method:	Dry
Rammer Type:	Mechanical
Specific Gravity (Fines):	2.65
Specific Gravity Method:	Estimated
Retained Sieve No 4 (4.75mm) (%):	0
Passing Sieve No 4 (4.75mm) (%):	100
Tested By:	Timothy Cannada
Date Tested:	8/10/2018

Comments

© 2000-2018 QESTLab by SpectraQEST.com

Professional Service Industries, Inc.
175 S. "A" Street
Pensacola, FL 32502
Eng Certificate Of Authorization 3684
Phone: (850) 434-1000
Fax: (850) 434-7200

Report No: CBR:07832578-4-S4

California Bearing Ratio Report

Client: INFRASTRUCTURE CONSULTING **CC:**
AND
5550 W. IDLEWILD AVENUE, SUITE 102
TAMPA, FL 33634
Project: DESTIN-FWB AIRPORT EXPANSION

Sample Details

Sample ID:	07832578-4-S4	**Date Sampled:**	8/1/2018
Sampling Method:	BULK	**Source:**	NATURAL SUBGRADE
Material:	BROWN SL/SILTY SAND	**Specification:**	
Location:	B-16	**Tested By:**	
Date Tested:			

Stress vs Penetration

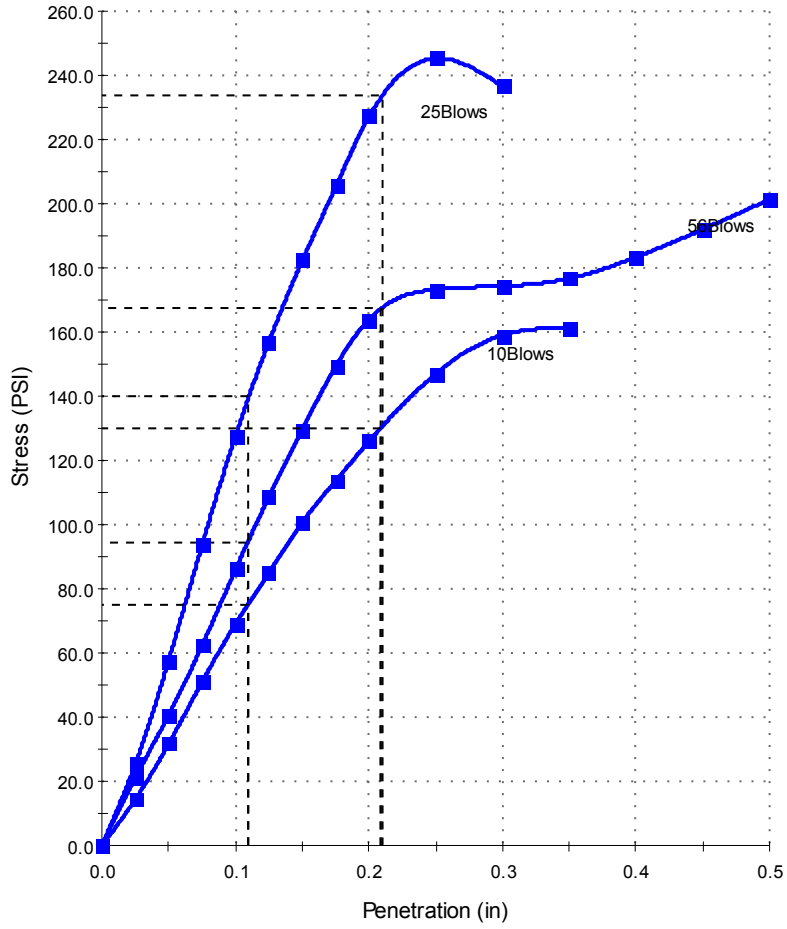

Overall Results

ASTM D 1883

Test Results

Blows	56	25	10
Comp. Eff.	ASTM D 1557	ASTM D 1557	ASTM D 1557
Initial MC (%)	10.9	10.7	10.8
MC of Top 1in (%)			
MC After (%)			
DD Before (lb/ft³)	113.22	109.77	106.93
DD After (lb/ft³)			
CBR (%)	11.2	15.6	8.7
% MDD	100.9	97.8	95.3
Sample Condition	Soaked	Soaked	Soaked
Immersion Period (hrs)	96	96	96
Surcharge (lb)	10.00	10.00	10.00
Swell (%)	0.00	0.00	0.00

CBR Vs Dry Density

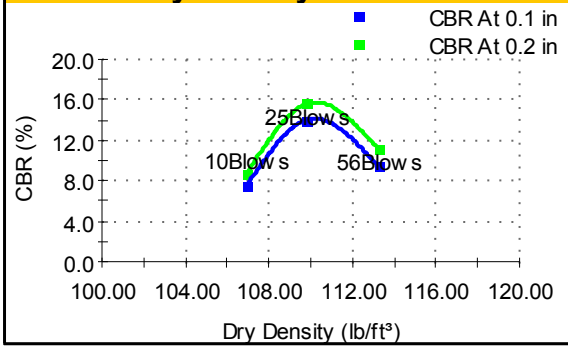

Comments

© 2000-2018 QESTLab by SpectraQEST.com

Professional Service Industries, Inc.
175 S. "A" Street
Pensacola, FL 32502
Eng Certificate Of Authorization 3684
Phone: (850) 434-1000
Fax: (850) 434-7200

Report No: PTR:07832578-4-S4

Proctor Report

Client: INFRASTRUCTURE CONSULTING **CC:**
AND
5550 W. IDLEWILD AVENUE, SUITE 102
TAMPA, FL 33634
Project: DESTIN-FWB AIRPORT EXPANSION

Sample Details

Sample ID:	07832578-4-S4	**Date Sampled:**	8/1/2018
Sampled By:	Timothy Cannada	**Specification:**	
Supplier:	Technician Pick-Up/Sampling	**Source:**	NATURAL SUBGRADE
Material:	BROWN SL/SILTY SAND	**Sampling Method:**	BULK
General Location:	B-16	**Location:**	B-16
Tested By:	Timothy Cannada	**Date Tested:**	8/10/2018

Dry Unit Weight - Water Content Relationship

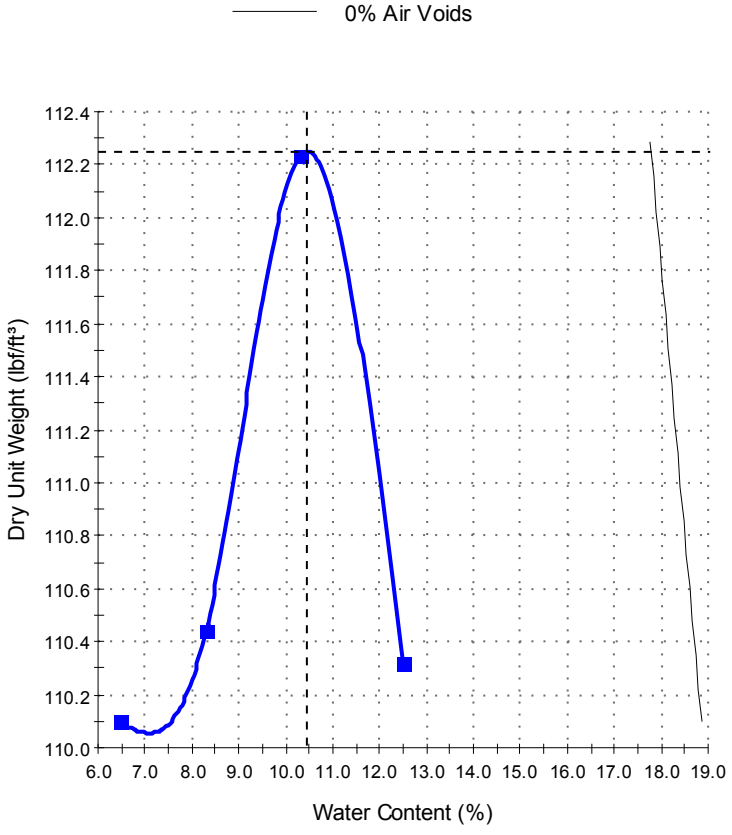

Test Results

ASTM D 1557

Maximum Dry Unit Weight (lbf/ft³):	**112.2**
Optimum Water Content (%):	**10.5**
Method:	A
Preparation Method:	Dry
Specific Gravity (Fines):	2.65
Specific Gravity Method:	Estimated
Retained Sieve No 4 (4.75mm) (%):	0
Passing Sieve No 4 (4.75mm) (%):	100
Tested By:	Timothy Cannada
Date Tested:	8/10/2018

Comments

© 2000-2018 QESTLab by SpectraQEST.com

GENERAL NOTES

SAMPLE IDENTIFICATION

The Unified Soil Classification System (USCS), AASHTO 1988 and ASTM designations D2487 and D-2488 are used to identify the encountered materials unless otherwise noted. Coarse-grained soils are defined as having more than 50% of their dry weight retained on a #200 sieve (0.075mm); they are described as: boulders, cobbles, gravel or sand. Fine-grained soils have less than 50% of their dry weight retained on a #200 sieve; they are defined as silts or clay depending on their Atterberg Limit attributes. Major constituents may be added as modifiers and minor constituents may be added according to the relative proportions based on grain size.

DRILLING AND SAMPLING SYMBOLS

SFA: Solid Flight Auger - typically 4" diameter flights, except where noted.
HSA: Hollow Stem Auger - typically 3¼" or 4¼ I.D. openings, except where noted.
M.R.: Mud Rotary - Uses a rotary head with Bentonite or Polymer Slurry
R.C.: Diamond Bit Core Sampler
H.A.: Hand Auger
P.A.: Power Auger - Handheld motorized auger

SS: Split-Spoon - 1 3/8" I.D., 2" O.D., except where noted.
ST: Shelby Tube - 3" O.D., except where noted.
RC: Rock Core
TC: Texas Cone
BS: Bulk Sample
PM: Pressuremeter
CPT-U: Cone Penetrometer Testing with Pore-Pressure Readings

SOIL PROPERTY SYMBOLS

N: Standard "N" penetration: Blows per foot of a 140 pound hammer falling 30 inches on a 2-inch O.D. Split-Spoon.
N_{60}: A "N" penetration value corrected to an equivalent 60% hammer energy transfer efficiency (ETR)
Q_u: Unconfined compressive strength, TSF
Q_p: Pocket penetrometer value, unconfined compressive strength, TSF
w%: Moisture/water content, %
LL: Liquid Limit, %
PL: Plastic Limit, %
PI: Plasticity Index = (LL-PL),%
DD: Dry unit weight, pcf
▼,▽,⧩ Apparent groundwater level at time noted

RELATIVE DENSITY OF COARSE-GRAINED SOILS

Relative Density	N - Blows/foot
Very Loose	0 - 4
Loose	4 - 10
Medium Dense	10 - 30
Dense	30 - 50
Very Dense	50 - 80
Extremely Dense	80+

ANGULARITY OF COARSE-GRAINED PARTICLES

Description	Criteria
Angular:	Particles have sharp edges and relatively plane sides with unpolished surfaces
Subangular:	Particles are similar to angular description, but have rounded edges
Subrounded:	Particles have nearly plane sides, but have well-rounded corners and edges
Rounded:	Particles have smoothly curved sides and no edges

GRAIN-SIZE TERMINOLOGY

Component	Size Range
Boulders:	Over 300 mm (>12 in.)
Cobbles:	75 mm to 300 mm (3 in. to 12 in.)
Coarse-Grained Gravel:	19 mm to 75 mm (¾ in. to 3 in.)
Fine-Grained Gravel:	4.75 mm to 19 mm (No.4 to ¾ in.)
Coarse-Grained Sand:	2 mm to 4.75 mm (No.10 to No.4)
Medium-Grained Sand:	0.42 mm to 2 mm (No.40 to No.10)
Fine-Grained Sand:	0.075 mm to 0.42 mm (No. 200 to No.40)
Silt:	0.005 mm to 0.075 mm
Clay:	<0.005 mm

PARTICLE SHAPE

Description	Criteria
Flat:	Particles with width/thickness ratio > 3
Elongated:	Particles with length/width ratio > 3
Flat & Elongated:	Particles meet criteria for both flat and elongated

RELATIVE PROPORTIONS OF FINES

Descriptive Term	% Dry Weight
Trace:	< 5%
With:	5% to 12%
Modifier:	>12%

GENERAL NOTES

(Continued)

CONSISTENCY OF FINE-GRAINED SOILS

Q_U - TSF	N - Blows/foot	Consistency
0 - 0.25	0 - 2	Very Soft
0.25 - 0.50	2 - 4	Soft
0.50 - 1.00	4 - 8	Firm (Medium Stiff)
1.00 - 2.00	8 - 15	Stiff
2.00 - 4.00	15 - 30	Very Stiff
4.00 - 8.00	30 - 50	Hard
8.00+	50+	Very Hard

MOISTURE CONDITION DESCRIPTION

Description	Criteria
Dry:	Absence of moisture, dusty, dry to the touch
Moist:	Damp but no visible water
Wet:	Visible free water, usually soil is below water table

RELATIVE PROPORTIONS OF SAND AND GRAVEL

Descriptive Term	% Dry Weight
Trace:	< 15%
With:	15% to 30%
Modifier:	>30%

STRUCTURE DESCRIPTION

Description	Criteria
Stratified:	Alternating layers of varying material or color with layers at least ¼-inch (6 mm) thick
Laminated:	Alternating layers of varying material or color with layers less than ¼-inch (6 mm) thick
Fissured:	Breaks along definite planes of fracture with little resistance to fracturing
Slickensided:	Fracture planes appear polished or glossy, sometimes striated
Blocky:	Cohesive soil that can be broken down into small angular lumps which resist further breakdown
Lensed:	Inclusion of small pockets of different soils
Layer:	Inclusion greater than 3 inches thick (75 mm)
Seam:	Inclusion 1/8-inch to 3 inches (3 to 75 mm) thick extending through the sample
Parting:	Inclusion less than 1/8-inch (3 mm) thick

SCALE OF RELATIVE ROCK HARDNESS

Q_U - TSF	Consistency
2.5 - 10	Extremely Soft
10 - 50	Very Soft
50 - 250	Soft
250 - 525	Medium Hard
525 - 1,050	Moderately Hard
1,050 - 2,600	Hard
>2,600	Very Hard

ROCK BEDDING THICKNESSES

Description	Criteria
Very Thick Bedded	Greater than 3-foot (>1.0 m)
Thick Bedded	1-foot to 3-foot (0.3 m to 1.0 m)
Medium Bedded	4-inch to 1-foot (0.1 m to 0.3 m)
Thin Bedded	1¼-inch to 4-inch (30 mm to 100 mm)
Very Thin Bedded	½-inch to 1¼-inch (10 mm to 30 mm)
Thickly Laminated	1/8-inch to ½-inch (3 mm to 10 mm)
Thinly Laminated	1/8-inch or less "paper thin" (<3 mm)

ROCK VOIDS

Voids	Void Diameter
Pit	<6 mm (<0.25 in)
Vug	6 mm to 50 mm (0.25 in to 2 in)
Cavity	50 mm to 600 mm (2 in to 24 in)
Cave	>600 mm (>24 in)

GRAIN-SIZED TERMINOLOGY

(Typically Sedimentary Rock)

Component	Size Range
Very Coarse Grained	>4.76 mm
Coarse Grained	2.0 mm - 4.76 mm
Medium Grained	0.42 mm - 2.0 mm
Fine Grained	0.075 mm - 0.42 mm
Very Fine Grained	<0.075 mm

ROCK QUALITY DESCRIPTION

Rock Mass Description	RQD Value
Excellent	90 -100
Good	75 - 90
Fair	50 - 75
Poor	25 -50
Very Poor	Less than 25

DEGREE OF WEATHERING

Slightly Weathered: Rock generally fresh, joints stained and discoloration extends into rock up to 25 mm (1 in), open joints may contain clay, core rings under hammer impact.

Weathered: Rock mass is decomposed 50% or less, significant portions of the rock show discoloration and weathering effects, cores cannot be broken by hand or scraped by knife.

Highly Weathered: Rock mass is more than 50% decomposed, complete discoloration of rock fabric, core may be extremely broken and gives clunk sound when struck by hammer, may be shaved with a knife.

SOIL CLASSIFICATION CHART

NOTE: DUAL SYMBOLS ARE USED TO INDICATE BORDERLINE SOIL CLASSIFICATIONS

MAJOR DIVISIONS			SYMBOLS: GRAPH	SYMBOLS: LETTER	TYPICAL DESCRIPTIONS
COARSE GRAINED SOILS MORE THAN 50% OF MATERIAL IS LARGER THAN NO. 200 SIEVE SIZE	GRAVEL AND GRAVELLY SOILS MORE THAN 50% OF COARSE FRACTION RETAINED ON NO. 4 SIEVE	CLEAN GRAVELS (LITTLE OR NO FINES)		GW	WELL-GRADED GRAVELS, GRAVEL - SAND MIXTURES, LITTLE OR NO FINES
				GP	POORLY-GRADED GRAVELS, GRAVEL - SAND MIXTURES, LITTLE OR NO FINES
		GRAVELS WITH FINES (APPRECIABLE AMOUNT OF FINES)	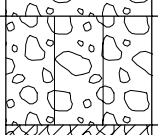	GM	SILTY GRAVELS, GRAVEL - SAND - SILT MIXTURES
			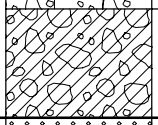	GC	CLAYEY GRAVELS, GRAVEL - SAND - CLAY MIXTURES
	SAND AND SANDY SOILS MORE THAN 50% OF COARSE FRACTION PASSING ON NO. 4 SIEVE	CLEAN SANDS (LITTLE OR NO FINES)	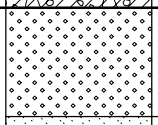	SW	WELL-GRADED SANDS, GRAVELLY SANDS, LITTLE OR NO FINES
			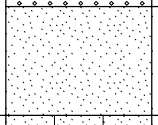	SP	POORLY-GRADED SANDS, GRAVELLY SAND, LITTLE OR NO FINES
		SANDS WITH FINES (APPRECIABLE AMOUNT OF FINES)	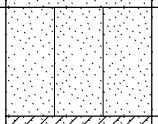	SM	SILTY SANDS, SAND - SILT MIXTURES
			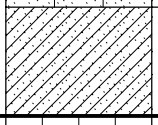	SC	CLAYEY SANDS, SAND - CLAY MIXTURES
FINE GRAINED SOILS MORE THAN 50% OF MATERIAL IS SMALLER THAN NO. 200 SIEVE SIZE	SILTS AND CLAYS	LIQUID LIMIT LESS THAN 50	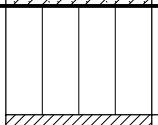	ML	INORGANIC SILTS AND VERY FINE SANDS, ROCK FLOUR, SILTY OR CLAYEY FINE SANDS OR CLAYEY SILTS WITH SLIGHT PLASTICITY
			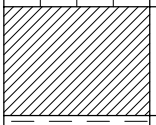	CL	INORGANIC CLAYS OF LOW TO MEDIUM PLASTICITY, GRAVELLY CLAYS, SANDY CLAYS, SILTY CLAYS, LEAN CLAYS
			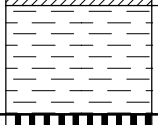	OL	ORGANIC SILTS AND ORGANIC SILTY CLAYS OF LOW PLASTICITY
	SILTS AND CLAYS	LIQUID LIMIT GREATER THAN 50	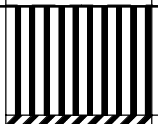	MH	INORGANIC SILTS, MICACEOUS OR DIATOMACEOUS FINE SAND OR SILTY SOILS
				CH	INORGANIC CLAYS OF HIGH PLASTICITY
			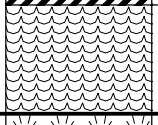	OH	ORGANIC CLAYS OF MEDIUM TO HIGH PLASTICITY, ORGANIC SILTS
HIGHLY ORGANIC SOILS			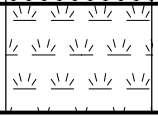	PT	PEAT, HUMUS, SWAMP SOILS WITH HIGH ORGANIC CONTENTS

psi

APPENDIX ‘B’
CONSTRUCTION SAFETY & PHASING PLAN (CSPP)

BID DOCUMENTS

CONSTRUCT WEST APRON EXPANSION
AND INFRASTRUCTURE AT VPS

CONSTRUCTION SAFETY AND PHASING PLAN (CSPP)

FOR

CONSTRUCT WEST APRON EXPANSION AND INFRASTRUCTURE AT VPS

FOR THE

DESTIN – FORT WALTON BEACH AIRPORT

FOR THE

OKALOOSA COUNTY, FLORIDA
BOARD OF COUNTY COMMISSIONERS

FAA AIP Project No. 3-12-0081-029-2018

May, 2019

PREPARED BY:

INFRASTRUCTURE
CONSULTING & ENGINEERING

5550 W. Idlewild Avenue, Suite 102
Tampa, Florida 33634
FL Certificate of Authorization No. 30862

TABLE OF CONTENTS

CONSTRUCTION SAFETY AND PHASING PLAN

FOR

CONSTRUCT WEST APRON EXPANSION AND INFRASTRUCTURE AT VSP

FOR THE

DESTIN – FORT WALTON BEACH AIRPORT

1. Introduction 1
2. Project Description 1
3. Coordination 1
4. Phasing 2
5. Areas and Operations Affected By Construction Activities 2
6. Protection of Navigation Aids (NAVAIDS) 3
7. Contractor Access 3
8. Wildlife Management 3
9. Foreign Object Debris (FOD) Management 3
10. Hazardous Materials (HAZMAT) Management 3
11. Notification of Construction Activities 4
12. Inspection Requirements 4
13. Underground Utilities 4
14. Penalties 4
15. Special Conditions 5
16. Runway and Taxiway Visual Aids 5
17. Marking and Signs for Access Routes 5
18. Hazard Marking and Lighting 5
19. Protection of Runway and Taxiway Safety Areas and Object Free Areas. 5
20. Other Limitations on Construction 5

Appendix A: FAA AC 150/5370-2G – Operational Safety on Airports During Construction

Appendix B: FAA AC 150/5210-5D – Painting, Marking, and Lighting of Vehicles used on Airports

Appendix C: FAA AC 150/5200-18C – Airport Safety Self Inspection

Appendix D: Airspace Exhibit

Appendix E: Construction Plan Sheets:

G1.1	Project Layout Plan
G1.2	Overall Site Plan
G1.3	General Notes
G3.0	Phasing Schedule
G3.1-G3.3	Phasing Plans
G3.4	PhasingDetails

CONSTRUCTION SAFETY AND PHASING PLAN
(CSPP)
FOR
CONSTRUCT WEST APRON EXPANSION AND INFRASTRUCTURE AT VPS
FOR THE
DESTIN – FORT WALTON BEACH AIRPORT

1. INTRODUCTION

This Construction Safety and Phasing Plan (CSPP) has been prepared as a supplement to the contract documents for the Commercial Apron Expansion project at the Destin – Fort Walton Beach Airport to set forth requirements for operational safety during the construction phase of the project. The contractor is required to become familiar with and follow the procedures set forth in this plan. **In addition, the contractor must, after reviewing the CSPP and prior to receiving a Notice to Proceed (NTP), prepare a Safety Plan Compliance Document (SPCD) in accordance with FAA AC 150/5370-2F – Operational Safety on Airports During Construction, included herein as Appendix "A" of the bid documents, describing how the contractor will comply with the CSPP.**

2. PROJECT DESCRIPTION

Okaloosa County (COUNTY) and the airport staff (AIRPORT) desire to construct a concrete, five (5) position apron for parking of ADG III aircraft on the west side of the airport. The project will enlarge the existing terminal apron to create additional ground loading parking spaces and overnight parking. Impacts to existing airport facilities will be incurred including water, sewer, lift stations, underground electrical, credit card parking, lavatory cart dump, high mast lights, fencing, gates, security cameras, covered walkways, and ground equipment parking.

3. COORDINATION

a. Contractor Progress Meetings: Progress meetings shall be held on a weekly basis at the airport at which operational schedules of the contractor, airport, airlines and other tenants will be discussed. Additional meetings will be held when requested by the Owner or the Contractor. The contractor's project manager and site superintendent shall be present at a minimum. Representatives of subcontractors and the Engineer will be asked to attend when the contractor feels their presence is needed or when the Owner requests their attendance.

b. Scope or Schedule Changes: Proposed scope and/or schedule changes will be discussed at each progress meeting along with their impact on the CSPP and the need to revise the CSPP.

c. FAA ATO Coordination Procedures: Work is entirely in a non-movement area of Eglin AFB. No communication with the ATCT will be required. However, the contractor shall monitor the Eglin Ground Frequency for arriving flights in order to safely pull back all men and equipment outside the the apron taxilane object free area (OFA) during aircraft operations on the apron.

4. PHASING

The project has 8 phases, 5 of which consist of work within the terminal apron taxilane object free area (OFA). The phases are to be as generally described below:

Phase 1: Expansion of the Credit Card Parking Lot and site demolition, clearing and grubbing, and utility relocation in the apron expansion area.

Phase 2: Clearing and grubbing, rough grading, demolition, water and sanitary sewer relocation work, including the new lift station. Work in this phase may be done concurrent with Phases 1 and 3.

Phase 3: Partial demolition of the Credit Card Parking Lot required by the apron expansion. This phase cannot begin until Phase 1 (expansion of the credit card lot) is complete but can be done concurrent with phase 2.

Phase 4: Construction of the Apron Expansion, including asphalt and PCC paving, storm drain structures and high mast lighting. Work in this phase may overlap with Phases 1, 2 and 3

These phases are delineated and described in more detail on the Phasing Plans (Sheets G3.0 thru G3.8) in Appendix E. Much of this work will need to occur within the apron taxilane OFA as delineated in the plans while the taxilane remains open to aircraft. Phases 5 thru 8 will require the taxilane to be temporarily relocated onto the new apron pavement to maintain access to passenger gates not closed during each of these phases. Each of these phases will include pavement milling and resurfacing operations within the temporary relocated taxilane OFA as delineated on the Phasing Plans. The gate position closed during each of these phases will be relocated to the new apron pavement as illustrated in the Phasing Plan drawings.

Aircraft access to each gate and temporary parking position must be maintained at all times. To accommodate this work within the taxilane OFA will be done on a pullback basis with construction personnel and equipment to be pulled back out of the OFA when an aircraft is operating on the taxilane. The airlines will provide flaggers/wing walkers to escort aircraft by the work areas. Except for the dump station removal in Phase 1 there will be no trenching within the OFA. All other work within the OFA will consist of asphalt and PCC paving, including stabilized base, base subgrade stabilization and excavation. Barricades will be placed along the edge of the taxilane separating it from the work area. Barricades will be low profile and lighted with flags meeting the requirements of AC 150/5370-2G and as shown in the drawings. Barricades are to be provided at locations shown on the phasing plan and at specific locations determined by the Engineer and Owner.

The contractor shall submit a phasing plan 7 days prior to the pre-construction conference. During the weekly construction coordination meetings, the contractor will be required to identify upcoming work and he will be working on for the following 2 weeks and to provide a plan of barricade locations and taxilane closures for each day's work for approval. Taxilane closures will not require a NOTAM.

5. AREAS AND OPERATIONS AFFECTED BY CONSTRUCTION ACTIVITIES

The only airfield operations areas affected by this project are Terminal Gates A1 thru A5 and their associated taxilane. These areas are shown on the Project Layout Plan and Phasing Plans of the construction drawings, which are included herein. Airport tenants will be briefed on the phasing plan. Construction equipment will not penetrate any runway obstacle free zone (OFZ). There are no permanent structures included in this project that penetrate the FAR Part 77 airspace. The only above ground construction other than fencing is high mast lighting. At the southernmost high mast light, which is the closest to Runway 12-30, the height of the 7:1 transition surface above the runway centerline is

(1516'-1000')/ 7 = y 73.7' as shown in the Airspace Exhibit in Appendix D. The Runway 12 end elevation at 83.7, which puts the elevation of the 7:1 transition surface at 157.4. The high mast light poles are 72' in height. At the southernmost pole the proposed ground elevation is 84.10, which puts the top at elevation 156.1, or 1.3' below the 7:1 surface.

6. PROTECTION OF NAVIGATION AIDS (NAVAIDS)

The project is not located in the area of any NAVAIDS and the contractor is prohibited from entering areas outside the project limits or haul routes shown on the Project Layout Plan. The contractor is subject to fines for entering AOA areas outside these limits.

7. CONTRACTOR ACCESS

a. The contractor's access points, staging areas and access/haul routes are identified on the Project Layout Plan and Phasing Plan. The contractor is not to use runways and taxiways as a haul routes.

b. The Contractor's employee personal vehicles will not be allowed in the AOA and will be required to park outside the airfield AOA security fence. The contractor's work vehicles must have company signs on each side of the vehicle.

c. Two-Way Radio Communication: All work for this project is located outside the movement area so communications with the Air Traffic Control Tower is not needed or allowed. The contractor will be required to stay in contact with Airport Operations Communications Center (AOC) via cell phone.

d. Vehicle and Equipment Identification: Any vehicle operating on the airport AOA must have the company name attached to each side of the vehicle and a flashing yellow beacon.

8. WILDLIFE MANAGEMENT

There are no wildlife issues at the Destin – Fort Walton Beach Airport that this project will affect. The following wildlife attractant mitigation procedures are in place:

a. The contractor will be required to immediately collect and dispose of any food scraps from construction personnel activity.

9. FOREIGN OBJECT DEBRIS (FOD) MANAGEMENT

The contractor will be required to continuously clear the project site of any and all debris capable of being blown by wind onto active airfield areas. Any debris or dirt from the project site deposited on any airfield pavement shall be cleaned immediately by a motor driven sweeper or vacuum, which the contractor is required to have onsite at all times. Sweepers must be equipped with non-metallic bristles. A program of regular airfield pavement inspection shall be planned by the contractor and conducted with the Airport Manager and the Engineer. The contractor shall keep a water truck onsite at all times for controlling dust.

10. HAZARDOUS MATERIALS (HAZMAT) MANAGEMENT

The project site drains to an existing stormwater retention area which will prevent hazardous material spills from being discharged offsite. However, the contractor will not be required or allowed to bring hazardous materials onsite and will not be required to provide a plan for the management of such materials.

The project involves grading and excavation work and includes a Stormwater Pollution Prevention Plan for erosion and sediment control. The contractor will be required to file with the FDEP a Notice of Intent (NOI) to use the NPDES generic permit for stormwater discharges for large and small construction projects.

11. NOTIFICATION OF CONSTRUCTION ACTIVITIES

a. The Owner shall maintain and distribute a list of responsible representatives/points of contacts with phone numbers and e-mail addresses. For the Owner this shall include the Project Manager, Construction Manager, and the Engineer's Resident Project Representative (RPR). Contacts from the Contractor will include the Project Manager, Site Superintendant, Safety Officer, and any subcontractor representatives. It will also include representatives from the FAA ADO office, and the Engineer of Record. As required in Section 01030 "Airport Project Procedures" the Contractor's Safety Officer shall be on call 24 hours a day for emergency maintenance of airport hazard lighting, barricades, and other safety features.

b. The contractor shall notify the Airport's Project Manager, Operations Manager or Inspector of upcoming work activity that will impact active airfield pavement areas or object free areas not less than 48 hours prior to that activity.

c. The contractor will need to call the AOC for medical, firefighting and police response who will notify the Aircraft Rescue and Fire Fighting (ARFF) facility and/or Airport Police. The Engineer's resident project rep is also to be immediately notified.

d. All the above information, including the appropriate phone numbers will be distributed at the pre-construction conference.

e. The FAA will need to be notified of equipment and operations that affects navigable airspace. Upon notice of award, the contractor will be asked to provide the Owner with a list of equipment and their height, so this can be reported to the FAA using form 7460-1 and/or the FAA OE/AAA website.

f. None of the Airport's NAVAIDs will be affected by this project.

12. INSPECTION REQUIREMENTS

The Engineer's Resident Project Representative will conduct daily inspections at a minimum. The Engineer of Record will make periodic inspection to verify compliance with the phasing and safety plan and as needed to resolve questions or disputes.

13. UNDERGROUND UTILITIES

The project will require relocation of existing water lines, sanitary sewer lift stations and force mains will need to be relocated out of the apron expansion area. These relocations will be completely within the airport property. Underground electric service will be off an on-airport transformer. No easements will be required.

14. PENALTIES

Per Section 01030 of the contract documents:

Any fines or assessments levied against the Sponsor as a result of unauthorized intrusions in the AOA, which include entering AOA areas outside the project limits or designated haul routes, or other violations by the Contractor's personnel or those of his subcontractors will be passed on to the Contractor. In addition, the Contractor will be subject to a **fine of $1,000.00** per incident, assessed by the Sponsor.

15. SPECIAL CONDITIONS

The airport has not identified any special conditions requiring any special response/ mitigation plan.

16. RUNWAY AND TAXIWAY /TAXILANE VISUAL AIDS

a. Taxiways/Taxilanes: Lighted low-profile barricades must be installed as described in section 4 above and as detailed on the Project Phasing Plan of the construction drawings or as directed by Airport Operations. The existing taxiway edge lights along the west side of the existing taxilane are to be removed. There is no other airfield lighting or lighted guidance signage affected by the project and no new taxiway lighting or guidance signage is included in the project.

b. Runways and NAVAIDS: There is no work in this project that affects the runways or NAVAIDs on the airport.

17. MARKING AND SIGNS FOR ACCESS ROUTES

Access Routes will be staked and marked with "CONSTRUCTION HAUL ROUTE" and aircraft pilots will be alerted to construction areas with "CONSTRUCTION AHEAD" signs per AC150/5370-2G and as detailed in the phasing plan sheets in Appendix "E".

18. HAZARD MARKING AND LIGHTING

Airfield barricades will be required to have red flashing or steady burning lights. In the event night work is required, the Contractor's vehicles will be required to have yellow flashing beacons. Addition requirements are in AC 150/5210-5D – Painting, Marking, and Lighting of Vehicles used on Airports, attached herein as Appendix "B". The contractor's Safety Officer, as discussed in Section 11 above will be responsible for maintenance of barricades.

19. PROTECTION OF RUNWAY AND TAXIWAY SAFETY AREAS AND OBJECT FREE AREAS.

a. Taxilanes: Taxilanes will be barricaded as described above in the section 4 on phasing when any work is being done within the Taxilane OFA.

b. Runways: There is no work in this project that affects any runway safety or object free area.

c. Penalties as discussed in section 14 may be levied against the contractor for any entry into these areas except when closed or restricted as described above.

20. OTHER LIMITATIONS ON CONSTRUCTION

Beyond the limitations previously discussed in the Phasing section the following limitations apply:

a. Construction equipment height will be less than the 72' high mast light pole height.

b. Work will not be allowed at night or on weekends except as required by the contract documents or approved by the Airport.

APPENDIX A

FAA AC 150/5370-2G

OPERATIONAL SAFETY ON AIRPORTS DURING CONSTRUCTION

U.S. Department
of Transportation
Federal Aviation
Administration

Advisory Circular

Subject: Operational Safety on Airports During Construction	**Date:** 12/13/2017 **Initiated By:** AAS-100	**AC No:** 150/5370-2G **Change:**

1 **Purpose.**

This AC sets forth guidelines for operational safety on airports during construction.

2 **Cancellation.**

This AC cancels AC 150/5370-2F, *Operational Safety on Airports during Construction*, dated September 29, 2011.

3 **Application.**

This AC assists airport operators in complying with Title 14 Code of Federal Regulations (CFR) Part 139, *Certification of Airports*. For those certificated airports, this AC provides one way, but not the only way, of meeting those requirements. The use of this AC is mandatory for those airport construction projects receiving funds under the Airport Improvement Program (AIP). See Grant Assurance No. 34, *Policies, Standards, and Specifications*. While we do not require non-certificated airports without grant agreements or airports using Passenger Facility Charge (PFC) Program funds for construction projects to adhere to these guidelines, we recommend that they do so to help these airports maintain operational safety during construction.

4 **Related Documents.**

ACs and Orders referenced in the text of this AC do not include a revision letter, as they refer to the latest version. Appendix A contains a list of reading material on airport construction, design, and potential safety hazards during construction, as well as instructions for obtaining these documents.

5 **Principal Changes.**

The AC incorporates the following principal changes:

1. Notification about impacts to both airport owned and FAA-owned NAVAIDs was added. See paragraph 2.13.5.3, NAVAIDs.

2. Guidance for the use of orange construction signs was added. See paragraph 2.18.4.2, Temporary Signs.
3. Open trenches or excavations may be permitted in the taxiway safety area while the taxiway is open to aircraft operations, subject to restrictions. See paragraph 2.22.3.4, Excavations.
4. Guidance for temporary shortened runways and displaced thresholds has been enhanced. See Figure 2-1 and Figure 2-2.
5. Figures have been improved and a new Appendix F on the placement of orange construction signs has been added.

Hyperlinks (allowing the reader to access documents located on the internet and to maneuver within this document) are provided throughout this document and are identified with underlined text. When navigating within this document, return to the previously viewed page by pressing the "ALT" and " ←" keys simultaneously.

Figures in this document are schematic representations and are not to scale.

6 **Use of Metrics.**

Throughout this AC, U.S. customary units are used followed with "soft" (rounded) conversion to metric units. The U.S. customary units govern.

7 **Where to Find this AC.**

You can view a list of all ACs at http://www.faa.gov/regulations_policies/advisory_circulars/. You can view the Federal Aviation Regulations at http://www.faa.gov/regulations_policies/faa_regulations/.

8 **Feedback on this AC.**

If you have suggestions for improving this AC, you may use the Advisory Circular Feedback form at the end of this AC.

John R. Dermody
Director of Airport Safety and Standards

CONTENTS

Paragraph **Page**

Chapter 1. Planning an Airfield Construction Project 1-1
1.1 Overview. 1-1
1.2 Plan for Safety. 1-1
1.3 Develop a Construction Safety and Phasing Plan (CSPP). 1-3
1.4 Who Is Responsible for Safety During Construction? 1-4

Chapter 2. Construction Safety and Phasing Plans 2-1
2.1 Overview. 2-1
2.2 Assume Responsibility. 2-1
2.3 Submit the CSPP. 2-1
2.4 Meet CSPP Requirements. 2-2
2.5 Coordination. 2-6
2.6 Phasing. 2-7
2.7 Areas and Operations Affected by Construction Activity. 2-7
2.8 Navigation Aid (NAVAID) Protection. 2-11
2.9 Contractor Access. 2-11
2.10 Wildlife Management. 2-15
2.11 Foreign Object Debris (FOD) Management. 2-16
2.12 Hazardous Materials (HAZMAT) Management. 2-16
2.13 Notification of Construction Activities. 2-16
2.14 Inspection Requirements. 2-18
2.15 Underground Utilities. 2-19
2.16 Penalties. 2-19
2.17 Special Conditions. 2-19
2.18 Runway and Taxiway Visual Aids. 2-19
2.19 Marking and Signs for Access Routes. 2-29
2.20 Hazard Marking, Lighting and Signing. 2-30
2.21 Work Zone Lighting for Nighttime Construction. 2-32
2.22 Protection of Runway and Taxiway Safety Areas. 2-33
2.23 Other Limitations on Construction. 2-37

Chapter 3. Guidelines for Writing a CSPP 3-1
3.1 General Requirements. 3-1
3.2 Applicability of Subjects. 3-1
3.3 Graphical Representations. 3-1
3.4 Reference Documents. 3-2
3.5 Restrictions. 3-2
3.6 Coordination. 3-2
3.7 Phasing. 3-2
3.8 Areas and Operations Affected by Construction. 3-2
3.9 NAVAID Protection. 3-2
3.10 Contractor Access. 3-3
3.11 Wildlife Management. 3-4
3.12 FOD Management. 3-4
3.13 HAZMAT Management. 3-4
3.14 Notification of Construction Activities. 3-4
3.15 Inspection Requirements. 3-5
3.16 Underground Utilities. 3-5
3.17 Penalties. 3-5
3.18 Special Conditions. 3-5
3.19 Runway and Taxiway Visual Aids. 3-6
3.20 Marking and Signs for Access Routes. 3-6
3.21 Hazard Marking and Lighting. 3-6
3.22 Work Zone Lighting for Nighttime Construction. 3-6
3.23 Protection of Runway and Taxiway Safety Areas. 3-7
3.24 Other Limitations on Construction. 3-7

Appendix A. Related Reading Material A-1

Appendix B. Terms and Acronyms B-1

Appendix C. Safety and Phasing Plan Checklist C-1

Appendix D. Construction Project Daily Safety Inspection Checklist D-1

Appendix E. Sample Operational Effects Table E-1

Appendix F. Orange Construction Signs F-1

FIGURES

Number **Page**

Figure 2-1. Temporary Partially Closed Runway 2-9
Figure 2-2. Temporary Displaced Threshold 2-10
Figure 2-3. Markings for a Temporarily Closed Runway 2-21
Figure 2-4. Temporary Taxiway Closure 2-22
Figure 2-5. Temporary Outboard White Threshold Bars and Yellow Arrowheads 2-24
Figure 2-6. Lighted X in Daytime 2-26
Figure 2-7. Lighted X at Night 2-26
Figure 2-8. Interlocking Barricades 2-31
Figure 2-9. Low Profile Barricades 2-32
Figure E-1. Phase I Example E-1
Figure E-2. Phase II Example E-2
Figure E-3. Phase III Example E-3
Figure F-1. Approved Sign Legends F-1
Figure F-2. Orange Construction Sign Example 1 ..... F-2
Figure F-3. Orange Construction Sign Example 2 ..... F-3

TABLES

Number **Page**

Table A-1. FAA Publications A-1
Table A-2. Code of Federal Regulation A-3
Table B-1. Terms and Acronyms B-1
Table C-1. CSPP Checklist C-1
Table D-1. Potentially Hazardous Conditions D-1
Table E-1. Operational Effects Table E-4
Table E-2. Runway and Taxiway Edge Protection E-6
Table E-3. Protection Prior to Runway Threshold E-7

Page Intentionally Blank

CHAPTER 1. PLANNING AN AIRFIELD CONSTRUCTION PROJECT

1.1 Overview.

Airports are complex environments, and procedures and conditions associated with construction activities often affect aircraft operations and can jeopardize operational safety. Safety considerations are paramount and may make operational impacts unavoidable. However, careful planning, scheduling, and coordination of construction activities can minimize disruption of normal aircraft operations and avoid situations that compromise the airport's operational safety. The airport operator must understand how construction activities and aircraft operations affect one another to be able to develop an effective plan to complete the project. While the guidance in this AC is primarily used for construction operations, the concepts, methods and procedures described may also enhance the day-to-day airport maintenance operations, such as lighting maintenance and snow removal operations.

1.2 Plan for Safety.

Safety, maintaining aircraft operations, and construction costs are all interrelated. Since safety must not be compromised, the airport operator must strike a balance between maintaining aircraft operations and construction costs. This balance will vary widely depending on the operational needs and resources of the airport and will require early coordination with airport users and the FAA. As the project design progresses, the necessary construction locations, activities, and associated costs will be identified and their impact to airport operations must be assessed. Adjustments are made to the proposed construction activities, often by phasing the project, and/or to airport operations to maintain operational safety. This planning effort will ultimately result in a project Construction Safety and Phasing Plan (CSPP). The development of the CSPP takes place through the following five steps:

1.2.1 Identify Affected Areas.

The airport operator must determine the geographic areas on the airport affected by the construction project. Some, such as a runway extension, will be defined by the project. Others may be variable, such as the location of haul routes and material stockpiles.

1.2.2 Describe Current Operations.

Identify the normal airport operations in each affected area for each phase of the project. This becomes the baseline from which the impact on operations by construction activities can be measured. This should include a narrative of the typical users and aircraft operating within the affected areas. It should also include information related to airport operations: the Aircraft Approach Category (AAC) and Airplane Design Group (ADG) of the airplanes that operate on each runway; the ADG and Taxiway Design Group (TDG)[1] for each affected taxiway; designated approach visibility minimums;

[1] Find Taxiway Design Group information in AC 150/5300-13, *Airport Design.*

available approach and departure procedures; most demanding aircraft; declared distances; available air traffic control services; airport Surface Movement Guidance and Control System (SMGCS) plan; and others. The applicable seasons, days and times for certain operations should also be identified as applicable.

1.2.3 Allow for Temporary Changes to Operations.

To the extent practical, current airport operations should be maintained during the construction. In consultation with airport users, Aircraft Rescue and Fire Fighting (ARFF) personnel, and FAA Air Traffic Organization (ATO) personnel, the airport operator should identify and prioritize the airport's most important operations. The construction activities should be planned, through project phasing if necessary, to safely accommodate these operations. When the construction activities cannot be adjusted to safely maintain current operations, regardless of their importance, then the operations must be revised accordingly. Allowable changes include temporary revisions to approach procedures, restricting certain aircraft to specific runways and taxiways, suspension of certain operations, decreased weights for some aircraft due to shortened runways, and other changes. An example of a table showing temporary operations versus current operations is shown in Appendix E.

1.2.4 Take Required Measures to Revise Operations.

Once the level and type of aircraft operations to be maintained are identified, the airport operator must determine the measures required to safely conduct the planned operations during the construction. These measures will result in associated costs, which can be broadly interpreted to include not only direct construction costs, but also loss of revenue from impacted operations. Analysis of costs may indicate a need to reevaluate allowable changes to operations. As aircraft operations and allowable changes will vary widely among airports, this AC presents general guidance on those subjects.

1.2.5 Manage Safety Risk.

The FAA is committed to incorporating proactive safety risk management (SRM) tools into its decision-making processes. FAA Order 5200.11, *FAA Airports (ARP) Safety Management System (SMS)*, requires the FAA to conduct a Safety Assessment for certain triggering actions. Certain airport projects may require the airport operator to provide a Project Proposal Summary to help the FAA determine whether a Safety Assessment is required prior to FAA approval of the CSPP. The airport operator must coordinate with the appropriate FAA Airports Regional or District Office early in the development of the CSPP to determine the need for a Safety Risk Assessment. If the FAA requires an assessment, the airport operator must at a minimum:

1. Notify the appropriate FAA Airports Regional or District Office during the project "scope development" phase of any project requiring a CSPP.
2. Provide documents identified by the FAA as necessary to conduct SRM.
3. Participate in the SRM process for airport projects.
4. Provide a representative to participate on the SRM panel.

5. Ensure that all applicable SRM identified risks elements are recorded and mitigated within the CSPP.

1.3 **Develop a Construction Safety and Phasing Plan (CSPP).**

Development of an effective CSPP will require familiarity with many other documents referenced throughout this AC. See Appendix A for a list of related reading material.

1.3.1 List Requirements.

A CSPP must be developed for each on-airfield construction project funded by the Airport Improvement Program (AIP) or located on an airport certificated under Part 139. For on-airfield construction projects at Part 139 airports funded without AIP funds, the preparation of a CSPP represents an acceptable method the certificate holder may use to meet Part 139 requirements during airfield construction activity. As per FAA Order 5200.11, projects that require Safety Assessments do not include construction, rehabilitation, or change of any facility that is entirely outside the air operations area, does not involve any expansion of the facility envelope and does not involve construction equipment, haul routes or placement of material in locations that require access to the air operations area, increase the facility envelope, or impact line-of-sight. Such facilities may include passenger terminals and parking or other structures. However, extraordinary circumstances may trigger the need for a Safety Assessment and a CSPP. The CSPP is subject to subsequent review and approval under the FAA's Safety Risk Management procedures (see paragraph 1.2.5).

1.3.2 Prepare a Safety Plan Compliance Document (SPCD).

The Safety Plan Compliance Document (SPCD) details how the contractor will comply with the CSPP. Also, it will not be possible to determine all safety plan details (for example specific hazard equipment and lighting, contractor's points of contact, construction equipment heights) during the development of the CSPP. The successful contractor must define such details by preparing an SPCD that the airport operator reviews for approval prior to issuance of a notice-to-proceed. The SPCD is a subset of the CSPP, similar to how a shop drawing review is a subset to the technical specifications.

1.3.3 Assume Responsibility for the CSPP.

The airport operator is responsible for establishing and enforcing the CSPP. The airport operator may use the services of an engineering consultant to help develop the CSPP. However, writing the CSPP cannot be delegated to the construction contractor. Only those details the airport operator determines cannot be addressed before contract award are developed by the contractor and submitted for approval as the SPCD. The SPCD does not restate nor propose differences to provisions already addressed in the CSPP.

1.4 Who Is Responsible for Safety During Construction?

1.4.1 Establish a Safety Culture.

Everyone has a role in operational safety on airports during construction: the airport operator, the airport's consultants, the construction contractor and subcontractors, airport users, airport tenants, ARFF personnel, Air Traffic personnel, including Technical Operations personnel, FAA Airports Division personnel, and others, such as military personnel at any airport supporting military operations (e.g. national guard or a joint use facility). Close communication and coordination between all affected parties is the key to maintaining safe operations. Such communication and coordination should start at the project scoping meeting and continue through the completion of the project. The airport operator and contractor should conduct onsite safety inspections throughout the project and immediately remedy any deficiencies, whether caused by negligence, oversight, or project scope change.

1.4.2 Assess Airport Operator's Responsibilities.

An airport operator has overall responsibility for all activities on an airport, including construction. This includes the predesign, design, preconstruction, construction, and inspection phases. Additional information on the responsibilities listed below can be found throughout this AC. The airport operator must:

1.4.2.1 Develop a CSPP that complies with the safety guidelines of Chapter 2, Construction Safety and Phasing Plans, and Chapter 3, Guidelines for Writing a CSPP. The airport operator may develop the CSPP internally or have a consultant develop the CSPP for approval by the airport operator. For tenant sponsored projects, approve a CSPP developed by the tenant or its consultant.

1.4.2.2 Require, review and approve the SPCD by the contractor that indicates how it will comply with the CSPP and provides details that cannot be determined before contract award.

1.4.2.3 Convene a preconstruction meeting with the construction contractor, consultant, airport employees and, if appropriate, tenant sponsor and other tenants to review and discuss project safety before beginning construction activity. The appropriate FAA representatives should be invited to attend the meeting. See AC 150/5370-12, *Quality Management for Federally Funded Airport Construction Projects.* (Note "FAA" refers to the Airports Regional or District Office, the Air Traffic Organization, Flight Standards Service, and other offices that support airport operations, flight regulations, and construction/environmental policies.)

1.4.2.4 Ensure contact information is accurate for each representative/point of contact identified in the CSPP and SPCD.

1.4.2.5 Hold weekly or, if necessary, daily safety meetings with all affected parties to coordinate activities.

1.4.2.6 Notify users, ARFF personnel, and FAA ATO personnel of construction and conditions that may adversely affect the operational safety of the airport via Notices to Airmen (NOTAM) and other methods, as appropriate. Convene a meeting for review and discussion if necessary.

1.4.2.7 Ensure construction personnel know applicable airport procedures and changes to those procedures that may affect their work.

1.4.2.8 Ensure that all temporary construction signs are located per the scheduled list for each phase of the project.

1.4.2.9 Ensure construction contractors and subcontractors undergo training required by the CSPP and SPCD.

1.4.2.10 Ensure vehicle and pedestrian operations addressed in the CSPP and SPCD are coordinated with airport tenants, the airport traffic control tower (ATCT), and construction contractors.

1.4.2.11 At certificated airports, ensure each CSPP and SPCD is consistent with Part 139.

1.4.2.12 Conduct inspections sufficiently frequently to ensure construction contractors and tenants comply with the CSPP and SPCD and that there are no altered construction activities that could create potential safety hazards.

1.4.2.13 Take immediate action to resolve safety deficiencies.

1.4.2.14 At airports subject to 49 CFR Part 1542, *Airport Security*, ensure construction access complies with the security requirements of that regulation.

1.4.2.15 Notify appropriate parties when conditions exist that invoke provisions of the CSPP and SPCD (for example, implementation of low-visibility operations).

1.4.2.16 Ensure prompt submittal of a Notice of Proposed Construction or Alteration (Form 7460-1) for conducting an aeronautical study of potential obstructions such as tall equipment (cranes, concrete pumps, other), stock piles, and haul routes. A separate form may be filed for each potential obstruction, or one form may be filed describing the entire construction area and maximum equipment height. In the latter case, a separate form must be filed for any object beyond or higher than the originally evaluated area/height. The FAA encourages online submittal of forms for expediency at https://oeaaa.faa.gov/oeaaa/external/portal.jsp. The appropriate FAA Airports Regional or District Office can provide assistance in determining which objects require an aeronautical study.

1.4.2.17 Ensure prompt transmission of the Airport Sponsor Strategic Event Submission, FAA Form 6000-26, located at https://oeaaa.faa.gov/oeaaa/external/content/AIRPORT_SPONSOR_STRATEGIC_EVENT_SUBMISSION_FORM.pdf, to assure proper coordination for NAS Strategic Interruption per Service Level Agreement with ATO.

1.4.2.18 Promptly notify the FAA Airports Regional or District Office of any proposed changes to the CSPP prior to implementation of the change. Changes to the CSPP require review and approval by the airport operator and the FAA. The FAA Airports Regional or District office will determine if further coordination within the FAA is needed. Coordinate with appropriate local and other federal government agencies, such as Environmental Protection Agency (EPA), Occupational Safety and Health Administration (OSHA), Transportation Security Administration (TSA), and the state environmental agency.

1.4.3 Define Construction Contractor's Responsibilities.

The contractor is responsible for complying with the CSPP and SPCD. The contractor must:

1.4.3.1 Submit a Safety Plan Compliance Document (SPCD) to the airport operator describing how it will comply with the requirements of the CSPP and supply any details that could not be determined before contract award. The SPCD must include a certification statement by the contractor, indicating an understanding of the operational safety requirements of the CSPP and the assertion of compliance with the approved CSPP and SPCD unless written approval is granted by the airport operator. Any construction practice proposed by the contractor that does not conform to the CSPP and SPCD may impact the airport's operational safety and will require a revision to the CSPP and SPCD and re-coordination with the airport operator and the FAA in advance.

1.4.3.2 Have available at all times copies of the CSPP and SPCD for reference by the airport operator and its representatives, and by subcontractors and contractor employees.

1.4.3.3 Ensure that construction personnel are familiar with safety procedures and regulations on the airport. Provide a point of contact who will coordinate an immediate response to correct any construction-related activity that may adversely affect the operational safety of the airport. Many projects will require 24-hour coverage.

1.4.3.4 Identify in the SPCD the contractor's on-site employees responsible for monitoring compliance with the CSPP and SPCD during construction. At least one of these employees must be on-site when active construction is taking place.

1.4.3.5 Conduct sufficient inspections to ensure construction personnel comply with the CSPP and SPCD and that there are no altered construction activities that could create potential safety hazards.

1.4.3.6 Restrict movement of construction vehicles and personnel to permitted construction areas by flagging, barricading, erecting temporary fencing, or providing escorts, as appropriate, and as specified in the CSPP and SPCD.

1.4.3.7 Ensure that no contractor employees, employees of subcontractors or suppliers, or other persons enter any part of the air operations area (AOA) from the construction site unless authorized.

1.4.3.8 Ensure prompt submittal through the airport operator of Form 7460-1 for the purpose of conducting an aeronautical study of contractor equipment such as tall equipment (cranes, concrete pumps, and other equipment), stock piles, and haul routes when different from cases previously filed by the airport operator. The FAA encourages online submittal of forms for expediency at https://oeaaa.faa.gov/oeaaa/external/portal.jsp.

1.4.3.9 Ensure that all necessary safety mitigations are understood by all parties involved, and any special requirements of each construction phase will be fulfilled per the approved timeframe.

1.4.3.10 Participate in pre-construction meetings to review construction limits, safety mitigations, NOTAMs, and understand all special airport operational needs during each phase of the project.

1.4.4 Define Tenant's Responsibilities.

If planning construction activities on leased property, Airport tenants, such as airline operators, fixed base operators, and FAA ATO/Technical Operations sponsoring construction are strongly encouraged to:

1. Develop, or have a consultant develop, a project specific CSPP and submit it to the airport operator. The airport operator may forgo a complete CSPP submittal and instead incorporate appropriate operational safety principles and measures addressed in the advisory circular within their tenant lease agreements.
2. In coordination with its contractor, develop an SPCD and submit it to the airport operator for approval issued prior to issuance of a Notice to Proceed.
3. Ensure that construction personnel are familiar with safety procedures and regulations on the airport during all phases of the construction.
4. Provide a point of contact of who will coordinate an immediate response to correct any construction-related activity that may adversely affect the operational safety of the airport.
5. Identify in the SPCD the contractor's on-site employees responsible for monitoring compliance with the CSPP and SPCD during construction. At least one of these employees must be on-site when active construction is taking place.
6. Ensure that no tenant or contractor employees, employees of subcontractors or suppliers, or any other persons enter any part of the AOA from the construction site unless authorized.
7. Restrict movement of construction vehicles to construction areas by flagging and barricading, erecting temporary fencing, or providing escorts, as appropriate, as specified in the CSPP and SPCD.
8. Ensure prompt submittal through the airport operator of Form 7460-1 for conducting an aeronautical study of contractor equipment such as tall equipment (cranes, concrete pumps, other), stock piles, and haul routes. The FAA encourages online submittal of forms for expediency at https://oeaaa.faa.gov/oeaaa/external/portal.jsp.
9. Participate in pre-construction meetings to review construction limits, safety mitigations, NOTAMs, and understand all special airport operational needs during each phase of the project.

CHAPTER 2. CONSTRUCTION SAFETY AND PHASING PLANS

2.1 Overview.

Aviation safety is the primary consideration at airports, especially during construction. The airport operator's CSPP and the contractor's Safety Plan Compliance Document (SPCD) are the primary tools to ensure safety compliance when coordinating construction activities with airport operations. These documents identify all aspects of the construction project that pose a potential safety hazard to airport operations and outline respective mitigation procedures for each hazard. They must provide information necessary for the Airport Operations department to conduct airfield inspections and expeditiously identify and correct unsafe conditions during construction. All aviation safety provisions included within the project drawings, contract specifications, and other related documents must also be reflected in the CSPP and SPCD.

2.2 Assume Responsibility.

Operational safety on the airport remains the airport operator's responsibility at all times. The airport operator must develop, certify, and submit for FAA approval each CSPP. It is the airport operator's responsibility to apply the requirements of the FAA approved CSPP. The airport operator must revise the CSPP when conditions warrant changes and must submit the revised CSPP to the FAA for approval. The airport operator must also require and approve a SPCD from the project contractor.

2.3 Submit the CSPP.

Construction Safety and Phasing Plans should be developed concurrently with the project design. Milestone versions of the CSPP should be submitted for review and approval as follows. While these milestones are not mandatory, early submission will help to avoid delays. Submittals are preferred in 8.5 × 11 inch or 11 × 17 inch format for compatibility with the FAA's Obstruction Evaluation / Airport Airspace Analysis (OE / AAA) process.

2.3.1 Submit an Outline/Draft.

By the time approximately 25% to 30% of the project design is completed, the principal elements of the CSPP should be established. Airport operators are encouraged to submit an outline or draft, detailing all CSPP provisions developed to date, to the FAA for review at this stage of the project design.

2.3.2 Submit a CSPP.

The CSPP should be formally submitted for FAA approval when the project design is 80 percent to 90 percent complete. Since provisions in the CSPP will influence contract costs, it is important to obtain FAA approval in time to include all such provisions in the procurement contract.

2.3.3 Submit an SPCD.

The contractor should submit the SPCD to the airport operator for approval to be issued prior to the Notice to Proceed.

2.3.4 Submit CSPP Revisions.

All revisions to a previously approved CSPP must be re-submitted to the FAA for review and approval/disapproval action.

2.4 Meet CSPP Requirements.

2.4.1 To the extent possible, the CSPP should address the following as outlined in Chapter 3, Guidelines for Writing a CSPP. Details that cannot be determined at this stage are to be included in the SPCD.

1. Coordination.
    a. Contractor progress meetings.
    b. Scope or schedule changes.
    c. FAA ATO coordination.
2. Phasing.
    a. Phase elements.
    b. Construction safety drawings.
3. Areas and operations affected by the construction activity.
    a. Identification of affected areas.
    b. Mitigation of effects.
4. Protection of navigation aids (NAVAIDs).
5. Contractor access.
    a. Location of stockpiled construction materials.
    b. Vehicle and pedestrian operations.
6. Wildlife management.
    a. Trash.
    b. Standing water.
    c. Tall grass and seeds.
    d. Poorly maintained fencing and gates.
    e. Disruption of existing wildlife habitat.
7. Foreign Object Debris (FOD) management.
8. Hazardous materials (HAZMAT) management.
9. Notification of construction activities.

a. Maintenance of a list of responsible representatives/ points of contact.

b. NOTAM.

c. Emergency notification procedures.

d. Coordination with ARFF Personnel.

e. Notification to the FAA.

10. Inspection requirements.

a. Daily (or more frequent) inspections.

b. Final inspections.

11. Underground utilities.

12. Penalties.

13. Special conditions.

14. Runway and taxiway visual aids. Marking, lighting, signs, and visual NAVAIDs.

a. General.

b. Markings.

c. Lighting and visual NAVAIDs.

d. Signs, temporary, including orange construction signs, and permanent signs.

15. Marking and signs for access routes.

16. Hazard marking and lighting.

a. Purpose.

b. Equipment.

17. Work zone lighting for nighttime construction (if applicable).

18. Protection of runway and taxiway safety areas, object free areas, obstacle free zones, and approach/departure surfaces.

a. Runway Safety Area (RSA).

b. Runway Object Free Area (ROFA).

c. Taxiway Safety Area (TSA). Provide details for any adjustments to Taxiway Safety Area width to allow continued operation of smaller aircraft. See paragraph 2.22.3.

d. Taxiway Object Free Area (TOFA). Provide details for any continued aircraft operations while construction occurs within the TOFA. See paragraph 2.22.4.

e. Obstacle Free Zone (OFZ).

f. Runway approach/departure surfaces.

19. Other limitations on construction.

a. Prohibitions.

b. Restrictions.

2.4.2 The Safety Plan Compliance Document (SPCD) should include a general statement by the construction contractor that he/she has read and will abide by the CSPP. In addition, the SPCD must include all supplemental information that could not be included in the CSPP prior to the contract award. The contractor statement should include the name of the contractor, the title of the project CSPP, the approval date of the CSPP, and a reference to any supplemental information (that is, "I, (Name of Contractor), have read the (Title of Project) CSPP, approved on (Date), and will abide by it as written and with the following additions as noted:"). The supplemental information in the SPCD should be written to match the format of the CSPP indicating each subject by corresponding CSPP subject number and title. If no supplemental information is necessary for any specific subject, the statement, "No supplemental information," should be written after the corresponding subject title. The SPCD should not duplicate information in the CSPP:

1. Coordination. Discuss details of proposed safety meetings with the airport operator and with contractor employees and subcontractors.
2. Phasing. Discuss proposed construction schedule elements, including:
   a. Duration of each phase.
   b. Daily start and finish of construction, including "night only" construction.
   c. Duration of construction activities during:
      i. Normal runway operations.
      ii. Closed runway operations.
      iii. Modified runway "Aircraft Reference Code" usage.
3. Areas and operations affected by the construction activity. These areas and operations should be identified in the CSPP and should not require an entry in the SPCD.
4. Protection of NAVAIDs. Discuss specific methods proposed to protect operating NAVAIDs.
5. Contractor access. Provide the following:
   a. Details on how the contractor will maintain the integrity of the airport security fence (gate guards, daily log of construction personnel, and other).
   b. Listing of individuals requiring driver training (for certificated airports and as requested).
   c. Radio communications.
      i. Types of radios and backup capabilities.
      ii. Who will be monitoring radios.
      iii. Who to contact if the ATCT cannot reach the contractor's designated person by radio.

d. Details on how the contractor will escort material delivery vehicles.

6. Wildlife management. Discuss the following:
   a. Methods and procedures to prevent wildlife attraction.
   b. Wildlife reporting procedures.
7. Foreign Object Debris (FOD) management. Discuss equipment and methods for control of FOD, including construction debris and dust.
8. Hazardous Materials (HAZMAT) management. Discuss equipment and methods for responding to hazardous spills.
9. Notification of construction activities. Provide the following:
   a. Contractor points of contact.
   b. Contractor emergency contact.
   c. Listing of tall or other requested equipment proposed for use on the airport and the timeframe for submitting 7460-1 forms not previously submitted by the airport operator.
   d. Batch plant details, including 7460-1 submittal.
10. Inspection requirements. Discuss daily (or more frequent) inspections and special inspection procedures.
11. Underground utilities. Discuss proposed methods of identifying and protecting underground utilities.
12. Penalties. Penalties should be identified in the CSPP and should not require an entry in the SPCD.
13. Special conditions. Discuss proposed actions for each special condition identified in the CSPP.
14. Runway and taxiway visual aids. Including marking, lighting, signs, and visual NAVAIDs. Discuss proposed visual aids including the following:
   a. Equipment and methods for covering signage and airfield lights.
   b. Equipment and methods for temporary closure markings (paint, fabric, other).
   c. Temporary orange construction signs.
   d. Types of temporary Visual Guidance Slope Indicators (VGSI).
15. Marking and signs for access routes. Discuss proposed methods of demarcating access routes for vehicle drivers.
16. Hazard marking and lighting. Discuss proposed equipment and methods for identifying excavation areas.
17. Work zone lighting for nighttime construction (if applicable). Discuss proposed equipment, locations, aiming, and shielding to prevent interference with air traffic control and aircraft operations.

18. Protection of runway and taxiway safety areas, object free areas, obstacle free zones, and approach/departure surfaces. Discuss proposed methods of identifying, demarcating, and protecting airport surfaces including:
    a. Equipment and methods for maintaining Taxiway Safety Area standards.
    b. Equipment and methods to ensure the safe passage of aircraft where Taxiway Safety Area or Taxiway Object Free Area standards cannot be maintained.
    c. Equipment and methods for separation of construction operations from aircraft operations, including details of barricades.
19. Other limitations on construction should be identified in the CSPP and should not require an entry in the SPCD.

2.5 **Coordination.**

Airport operators, or tenants responsible for design, bidding and conducting construction on their leased properties, should ensure at all project developmental stages, such as predesign, prebid, and preconstruction conferences, they capture the subject of airport operational safety during construction (see AC 150/5370-12, *Quality Management for Federally Funded Airport Construction Projects*). In addition, the following should be coordinated as required:

2.5.1 Progress Meetings.

Operational safety should be a standing agenda item for discussion during progress meetings throughout the project developmental stages.

2.5.2 Scope or Schedule Changes.

Changes in the scope or duration at any of the project stages may require revisions to the CSPP and review and approval by the airport operator and the FAA (see paragraph 1.4.2.17).

2.5.3 FAA ATO Coordination.

Early coordination with FAA ATO is highly recommended during the design phase and is required for scheduling Technical Operations shutdowns prior to construction. Coordination is critical to restarts of NAVAID services and to the establishment of any special procedures for the movement of aircraft. Formal agreements between the airport operator and appropriate FAA offices are recommended. All relocation or adjustments to NAVAIDs, or changes to final grades in critical areas, should be coordinated with FAA ATO and may require an FAA flight inspection prior to restarting the facility. Flight inspections must be coordinated and scheduled well in advance of the intended facility restart. Flight inspections may require a reimbursable agreement between the airport operator and FAA ATO. Reimbursable agreements should be coordinated a minimum of 12 months prior to the start of construction. (See paragraph 2.13.5.3.2 for required FAA notification regarding FAA-owned NAVAIDs.)

2.6 **Phasing.**

Once it has been determined what types and levels of airport operations will be maintained, the most efficient sequence of construction may not be feasible. In this case, the sequence of construction may be phased to gain maximum efficiency while allowing for the required operations. The development of the resulting construction phases should be coordinated with local Air Traffic personnel and airport users. The sequenced construction phases established in the CSPP must be incorporated into the project design and must be reflected in the contract drawings and specifications.

2.6.1 Phase Elements.

For each phase the CSPP should detail:

- Areas closed to aircraft operations.
- Duration of closures.
- Taxi routes and/or areas of reduced TSA and TOFA to reflect reduced ADG use.
- ARFF access routes.
- Construction staging, disposal, and cleanout areas.
- Construction access and haul routes.
- Impacts to NAVAIDs.
- Lighting, marking, and signing changes.
- Available runway length and/or reduced RSA and ROFA to reflect reduced ADG use.
- Declared distances (if applicable).
- Required hazard marking, lighting, and signing.
- Work zone lighting for nighttime construction (if applicable).
- Lead times for required notifications.

2.6.2 Construction Safety Drawings.

Drawings specifically indicating operational safety procedures and methods in affected areas (i.e., construction safety drawings) should be developed for each construction phase. Such drawings should be included in the CSPP as referenced attachments and should also be included in the contract drawing package.

2.7 **Areas and Operations Affected by Construction Activity.**

Runways and taxiways should remain in use by aircraft to the maximum extent possible without compromising safety. Pre-meetings with the FAA ATO will support operational simulations. See Appendix E for an example of a table showing temporary operations versus current operations. The tables in Appendix E can be useful for coordination among all interested parties, including FAA Lines of Business.

2.7.1 Identification of Affected Areas.

Identifying areas and operations affected by the construction helps to determine possible safety problems. The affected areas should be identified in the construction safety drawings for each construction phase. (See paragraph 2.6.2.) Of particular concern are:

2.7.1.1 **Closing, or Partial Closing, of Runways, Taxiways and Aprons, and Displaced Thresholds.**

When a runway is partially closed, a portion of the pavement is unavailable for any aircraft operation, meaning taxiing, landing, or takeoff in either direction on that pavement is prohibited. A displaced threshold, by contrast, is established to ensure obstacle clearance and adequate safety area for landing aircraft. The pavement prior to the displaced threshold is normally available for take-off in the direction of the displacement and for landing and takeoff in the opposite direction. Misunderstanding this difference, may result in issuance of an inaccurate NOTAM, and can lead to a hazardous condition.

2.7.1.1.1 Partially Closed Runways.

The temporarily closed portion of a partially closed runway will generally extend from the threshold to a taxiway that may be used for entering and exiting the runway. If the closed portion extends to a point between taxiways, pilots will have to back-taxi on the runway, which is an undesirable operation. See Figure 2-1 for a desirable configuration.

2.7.1.1.2 Displaced Thresholds.

Since the portion of the runway pavement between the permanent threshold and a standard displaced threshold is available for takeoff and for landing in the opposite direction, the temporary displaced threshold need not be located at an entrance/exit taxiway. See Figure 2-2.

2.7.1.2 Closing of aircraft rescue and fire fighting access routes.

2.7.1.3 Closing of access routes used by airport and airline support vehicles.

2.7.1.4 Interruption of utilities, including water supplies for fire fighting.

2.7.1.5 Approach/departure surfaces affected by heights of objects.

2.7.1.6 Construction areas, storage areas, and access routes near runways, taxiways, aprons, or helipads.

Figure 2-1. Temporary Partially Closed Runway

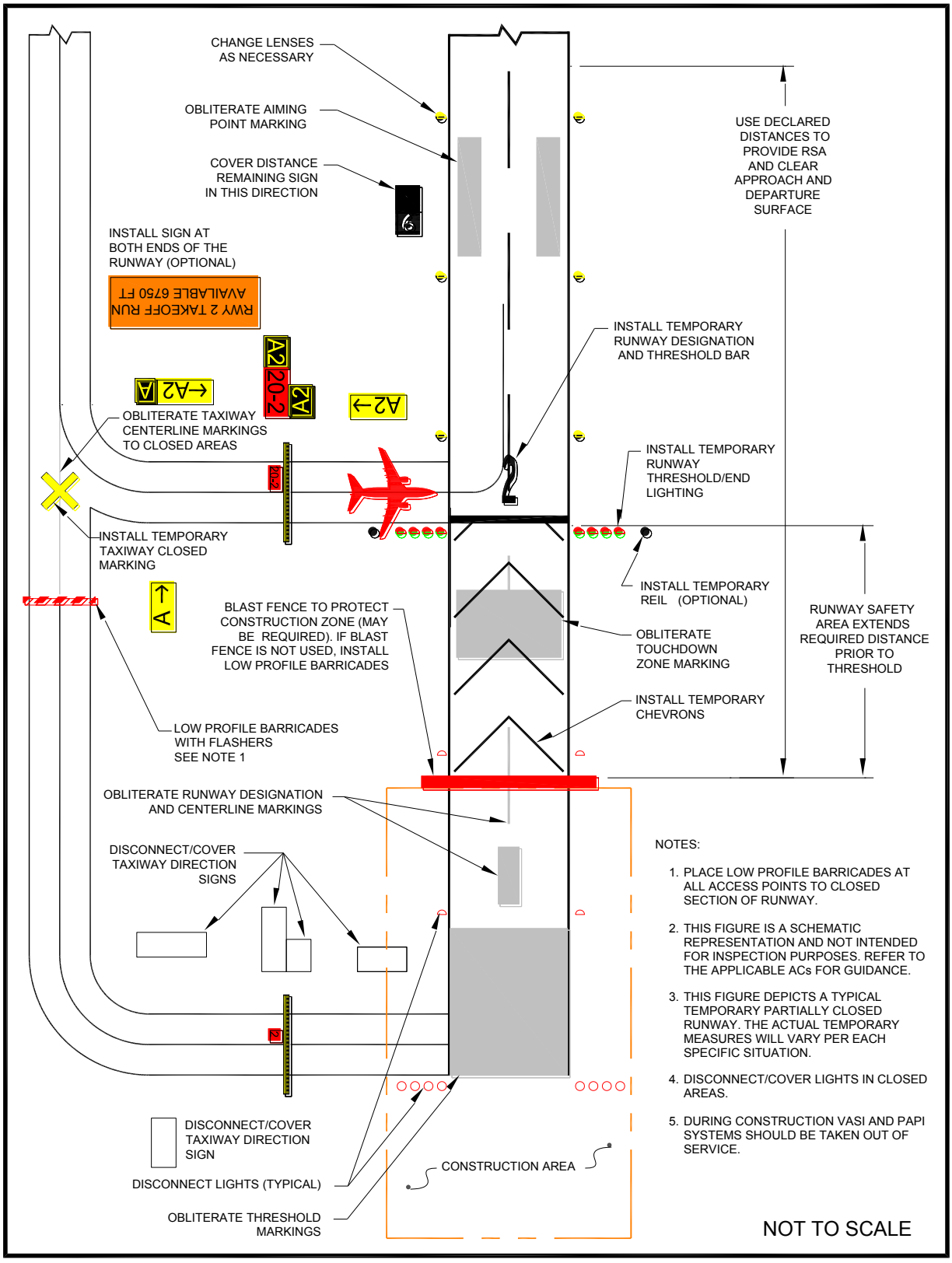

Figure 2-2. Temporary Displaced Threshold

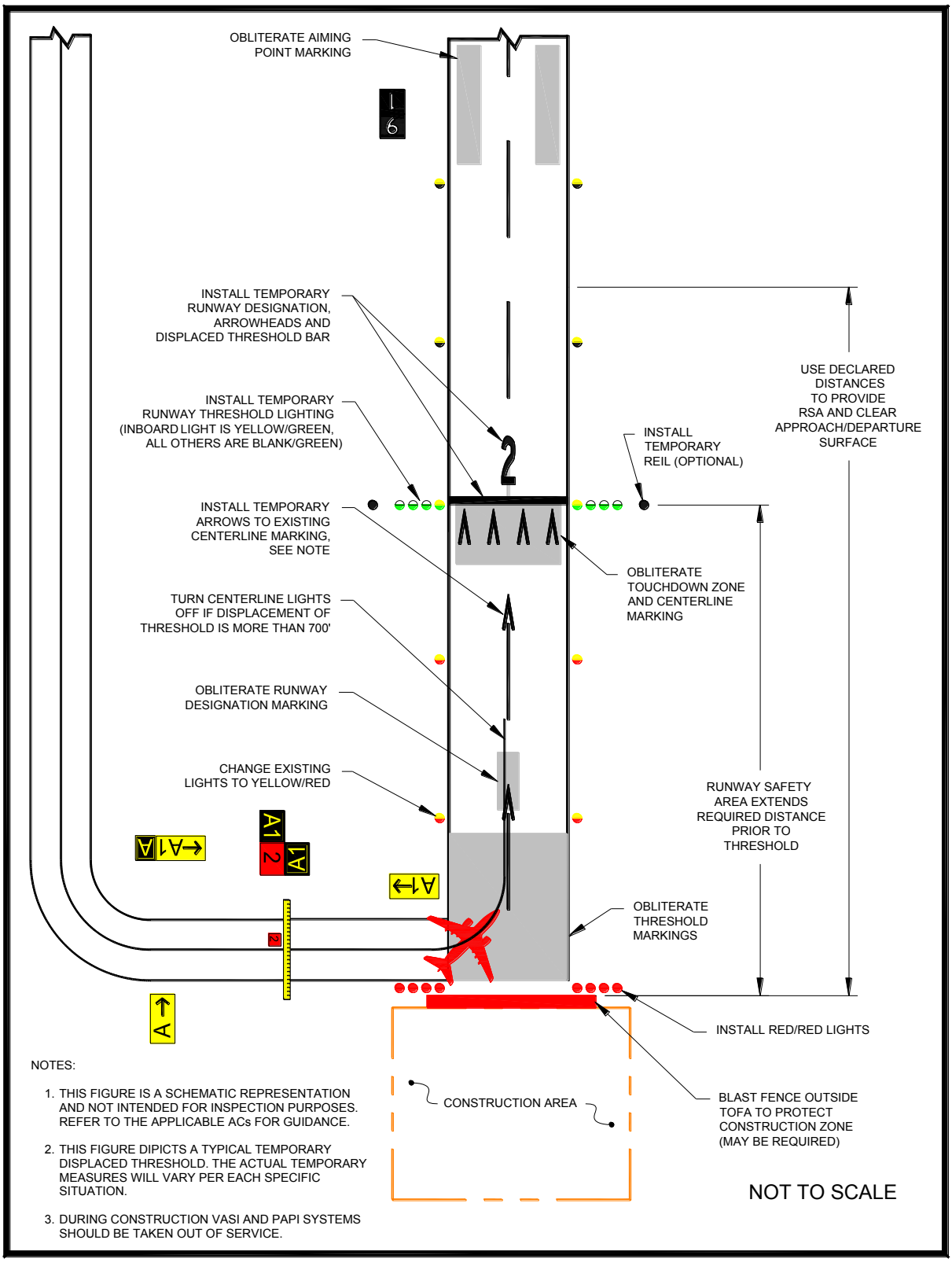

Note: See paragraph 2.18.2.5.

2.7.2 Mitigation of Effects.

Establishment of specific procedures is necessary to maintain the safety and efficiency of airport operations. The CSPP must address:

2.7.2.1 Temporary changes to runway and/or taxi operations.

2.7.2.2 Detours for ARFF and other airport vehicles.

2.7.2.3 Maintenance of essential utilities.

2.7.2.4 Temporary changes to air traffic control procedures. Such changes must be coordinated with the ATO.

2.8 Navigation Aid (NAVAID) Protection.

Before commencing construction activity, parking vehicles, or storing construction equipment and materials near a NAVAID, coordinate with the appropriate FAA ATO/Technical Operations office to evaluate the effect of construction activity and the required distance and direction from the NAVAID. (See paragraph 2.13.5.3.) Construction activities, materials/equipment storage, and vehicle parking near electronic NAVAIDs require special consideration since they may interfere with signals essential to air navigation. If any NAVAID may be affected, the CSPP and SPCD must show an understanding of the "critical area" associated with each NAVAID and describe how it will be protected. Where applicable, the operational critical areas of NAVAIDs should be graphically delineated on the project drawings. Pay particular attention to stockpiling material, as well as to movement and parking of equipment that may interfere with line of sight from the ATCT or with electronic emissions. Interference from construction equipment and activities may require NAVAID shutdown or adjustment of instrument approach minimums for low visibility operations. This condition requires that a NOTAM be filed (see paragraph 2.13.2). Construction activities and materials/equipment storage near a NAVAID must not obstruct access to the equipment and instruments for maintenance. Submittal of a 7460-1 form is required for construction vehicles operating near FAA NAVAIDs. (See paragraph 2.13.5.3.)

2.9 Contractor Access.

The CSPP must detail the areas to which the contractor must have access, and explain how contractor personnel will access those areas. Specifically address:

2.9.1 Location of Stockpiled Construction Materials.

Stockpiled materials and equipment storage are not permitted within the RSA and OFZ, and if possible should not be permitted within the Object Free Area (OFA) of an operational runway. Stockpiling material in the OFA requires submittal of a 7460-1 form and justification provided to the appropriate FAA Airports Regional or District Office for approval. The airport operator must ensure that stockpiled materials and equipment adjacent to these areas are prominently marked and lighted during hours of restricted visibility or darkness. (See paragraph 2.18.2.) This includes determining and

verifying that materials are stabilized and stored at an approved location so as not to be a hazard to aircraft operations and to prevent attraction of wildlife and foreign object damage from blowing or tracked material. See paragraphs 2.10 and 2.11.

2.9.2 Vehicle and Pedestrian Operations.

The CSPP should include specific vehicle and pedestrian requirements. Vehicle and pedestrian access routes for airport construction projects must be controlled to prevent inadvertent or unauthorized entry of persons, vehicles, or animals onto the AOA. The airport operator should coordinate requirements for vehicle operations with airport tenants, contractors, and the FAA air traffic manager. In regard to vehicle and pedestrian operations, the CSPP should include the following, with associated training requirements:

2.9.2.1 **Construction Site Parking.**

Designate in advance vehicle parking areas for contractor employees to prevent any unauthorized entry of persons or vehicles onto the AOA. These areas should provide reasonable contractor employee access to the job site.

2.9.2.2 **Construction Equipment Parking.**

Contractor employees must park and service all construction vehicles in an area designated by the airport operator outside the OFZ and never in the safety area of an active runway or taxiway. Unless a complex setup procedure makes movement of specialized equipment infeasible, inactive equipment must not be parked on a closed taxiway or runway. If it is necessary to leave specialized equipment on a closed taxiway or runway at night, the equipment must be well lighted. Employees should also park construction vehicles outside the OFA when not in use by construction personnel (for example, overnight, on weekends, or during other periods when construction is not active). Parking areas must not obstruct the clear line of sight by the ATCT to any taxiways or runways under air traffic control nor obstruct any runway visual aids, signs, or navigation aids. The FAA must also study those areas to determine effects on airport design criteria, surfaces established by 14 CFR Part 77, Safe, Efficient Use, and Preservation of the Navigable Airspace (Part 77), and on NAVAIDs and Instrument Approach Procedures (IAP). See paragraph 2.13.1 for further information.

2.9.2.3 **Access and Haul Roads.**

Determine the construction contractor’s access to the construction sites and haul roads. Do not permit the construction contractor to use any access or haul roads other than those approved. Access routes used by contractor vehicles must be clearly marked to prevent inadvertent entry to areas open to airport operations. Pay special attention to ensure that if construction traffic is to share or cross any ARFF routes that ARFF right of way is not impeded at any time, and that construction traffic on haul

roads does not interfere with NAVAIDs or approach surfaces of operational runways. Address whether access gates will be blocked or inoperative or if a rally point will be blocked or inaccessible.

2.9.2.4 Marking and lighting of vehicles in accordance with AC 150/5210-5, *Painting, Marking, and Lighting of Vehicles Used on an Airport.*

2.9.2.5 Description of proper vehicle operations on various areas under normal, lost communications, and emergency conditions.

2.9.2.6 Required escorts.

2.9.2.7 **Training Requirements for Vehicle Drivers to Ensure Compliance with the Airport Operator's Vehicle Rules and Regulations.**

Specific training should be provided to vehicle operators, including those providing escorts. See AC 150/5210-20, *Ground Vehicle Operations on Airports,* for information on training and records maintenance requirements.

2.9.2.8 **Situational Awareness.**

Vehicle drivers must confirm by personal observation that no aircraft is approaching their position (either in the air or on the ground) when given clearance to cross a runway, taxiway, or any other area open to airport operations. In addition, it is the responsibility of the escort vehicle driver to verify the movement/position of all escorted vehicles at any given time. At non-towered airports, all aircraft movements and flight operations rely on aircraft operators to self-report their positions and intentions. However, there is no requirement for an aircraft to have radio communications. Because aircraft do not always broadcast their positions or intentions, visual checking, radio monitoring, and situational awareness of the surroundings is critical to safety.

2.9.2.9 **Two-Way Radio Communication Procedures.**

2.9.2.9.1 General.

The airport operator must ensure that tenant and construction contractor personnel engaged in activities involving unescorted operation on aircraft movement areas observe the proper procedures for communications, including using appropriate radio frequencies at airports with and without ATCT. When operating vehicles on or near open runways or taxiways, construction personnel must understand the critical importance of maintaining radio contact, as directed by the airport operator, with:

1. Airport operations
2. ATCT

3. Common Traffic Advisory Frequency (CTAF), which may include UNICOM, MULTICOM.
4. Automatic Terminal Information Service (ATIS). This frequency is useful for monitoring conditions on the airport. Local air traffic will broadcast information regarding construction related runway closures and "shortened" runways on the ATIS frequency.

2.9.2.9.2 Areas Requiring Two-Way Radio Communication with the ATCT.

Vehicular traffic crossing active movement areas must be controlled either by two-way radio with the ATCT, escort, flagman, signal light, or other means appropriate for the particular airport.

2.9.2.9.3 Frequencies to be Used.

The airport operator will specify the frequencies to be used by the contractor, which may include the CTAF for monitoring of aircraft operations. Frequencies may also be assigned by the airport operator for other communications, including any radio frequency in compliance with Federal Communications Commission requirements. At airports with an ATCT, the airport operator will specify the frequency assigned by the ATCT to be used between contractor vehicles and the ATCT.

2.9.2.9.4 Proper radio usage, including read back requirements.

2.9.2.9.5 Proper phraseology, including the International Phonetic Alphabet.

2.9.2.9.6 Light Gun Signals.

Even though radio communication is maintained, escort vehicle drivers must also familiarize themselves with ATCT light gun signals in the event of radio failure. See the FAA safety placard "Ground Vehicle Guide to Airport Signs and Markings." This safety placard may be downloaded through the Runway Safety Program Web site at http://www.faa.gov/airports/runway_safety/publications/ (see "Signs & Markings Vehicle Dashboard Sticker") or obtained from the FAA Airports Regional Office.

2.9.2.10 **Maintenance of the secured area of the airport, including:**

2.9.2.10.1 Fencing and Gates.

Airport operators and contractors must take care to maintain security during construction when access points are created in the security fencing to permit the passage of construction vehicles or personnel. Temporary gates should be equipped so they can be securely closed and locked to prevent access by animals and unauthorized people. Procedures should be in place to ensure that only authorized persons and vehicles have access to the AOA and to prohibit "piggybacking" behind another person or vehicle. The Department of Transportation (DOT) document DOT/FAA/AR-

00/52, *Recommended Security Guidelines for Airport Planning and Construction*, provides more specific information on fencing. A copy of this document can be obtained from the Airport Consultants Council, Airports Council International, or American Association of Airport Executives.

2.9.2.10.2 Badging Requirements.

Airports subject to 49 CFR Part 1542, *Airport Security*, must meet standards for access control, movement of ground vehicles, and identification of construction contractor and tenant personnel.

2.10 Wildlife Management.

The CSPP and SPCD must be in accordance with the airport operator's wildlife hazard management plan, if applicable. See AC 150/5200-33, *Hazardous Wildlife Attractants On or Near Airports,* and CertAlert 98-05, *Grasses Attractive to Hazardous Wildlife.* Construction contractors must carefully control and continuously remove waste or loose materials that might attract wildlife. Contractor personnel must be aware of and avoid construction activities that can create wildlife hazards on airports, such as:

2.10.1 Trash.

Food scraps must be collected from construction personnel activity.

2.10.2 Standing Water.

2.10.3 Tall Grass and Seeds.

Requirements for turf establishment can be at odds with requirements for wildlife control. Grass seed is attractive to birds. Lower quality seed mixtures can contain seeds of plants (such as clover) that attract larger wildlife. Seeding should comply with the guidance in AC 150/5370-10, *Standards for Specifying Construction of Airports,* Item T-901, Seeding. Contact the local office of the United Sates Department of Agriculture Soil Conservation Service or the State University Agricultural Extension Service (County Agent or equivalent) for assistance and recommendations. These agencies can also provide liming and fertilizer recommendations.

2.10.4 Poorly Maintained Fencing and Gates.

See paragraph 2.9.2.10.1.

2.10.5 Disruption of Existing Wildlife Habitat.

While this will frequently be unavoidable due to the nature of the project, the CSPP should specify under what circumstances (location, wildlife type) contractor personnel should immediately notify the airport operator of wildlife sightings.

2.11 Foreign Object Debris (FOD) Management.

Waste and loose materials, commonly referred to as FOD, are capable of causing damage to aircraft landing gears, propellers, and jet engines. Construction contractors must not leave or place FOD on or near active aircraft movement areas. Materials capable of creating FOD must be continuously removed during the construction project. Fencing (other than security fencing) or covers may be necessary to contain material that can be carried by wind into areas where aircraft operate. See AC 150/5210-24, *Foreign Object Debris (FOD) Management.*

2.12 Hazardous Materials (HAZMAT) Management.

Contractors operating construction vehicles and equipment on the airport must be prepared to expeditiously contain and clean-up spills resulting from fuel or hydraulic fluid leaks. Transport and handling of other hazardous materials on an airport also requires special procedures. See AC 150/5320-15, *Management of Airport Industrial Waste.*

2.13 Notification of Construction Activities.

The CSPP and SPCD must detail procedures for the immediate notification of airport users and the FAA of any conditions adversely affecting the operational safety of the airport. It must address the notification actions described below, as applicable.

2.13.1 List of Responsible Representatives/points of contact for all involved parties, and procedures for contacting each of them, including after hours.

2.13.2 NOTAMs.

Only the airport operator may initiate or cancel NOTAMs on airport conditions, and is the only entity that can close or open a runway. The airport operator must coordinate the issuance, maintenance, and cancellation of NOTAMs about airport conditions resulting from construction activities with tenants and the local air traffic facility (control tower, approach control, or air traffic control center), and must either enter the NOTAM into NOTAM Manager, or provide information on closed or hazardous conditions on airport movement areas to the FAA Flight Service Station (FSS) so it can issue a NOTAM. The airport operator must file and maintain a list of authorized representatives with the FSS. Refer to AC 150/5200-28, *Notices to Airmen (NOTAMs) for Airport Operators,* for a sample NOTAM form. Only the FAA may issue or cancel NOTAMs on shutdown or irregular operation of FAA owned facilities. Any person having reason to believe that a NOTAM is missing, incomplete, or inaccurate must notify the airport operator. See paragraph 2.7.1.1 about issuing NOTAMs for partially closed runways versus runways with displaced thresholds.

2.13.3 Emergency notification procedures for medical, fire fighting, and police response.

2.13.4 Coordination with ARFF.

The CSPP must detail procedures for coordinating through the airport sponsor with ARFF personnel, mutual aid providers, and other emergency services if construction requires:

1. The deactivation and subsequent reactivation of water lines or fire hydrants, or
2. The rerouting, blocking and restoration of emergency access routes, or
3. The use of hazardous materials on the airfield.

2.13.5 Notification to the FAA.

2.13.5.1 **Part 77.**

Any person proposing construction or alteration of objects that affect navigable airspace, as defined in Part 77, must notify the FAA. This includes construction equipment and proposed parking areas for this equipment (i.e., cranes, graders, other equipment) on airports. FAA Form 7460-1, *Notice of Proposed Construction or Alteration*, can be used for this purpose and submitted to the appropriate FAA Airports Regional or District Office. See Appendix A to download the form. Further guidance is available on the FAA web site at oeaaa.faa.gov.

2.13.5.2 **Part 157.**

With some exceptions, Title 14 CFR Part 157, *Notice of Construction, Alteration, Activation, and Deactivation of Airports*, requires that the airport operator notify the FAA in writing whenever a non-Federally funded project involves the construction of a new airport; the construction, realigning, altering, activating, or abandoning of a runway, landing strip, or associated taxiway; or the deactivation or abandoning of an entire airport. Notification involves submitting FAA Form 7480-1, *Notice of Landing Area Proposal*, to the nearest FAA Airports Regional or District Office. See Appendix A to download the form.

2.13.5.3 **NAVAIDs.**

For emergency (short-notice) notification about impacts to both airport owned and FAA owned NAVAIDs, contact: 866-432-2622.

2.13.5.3.1 Airport Owned/FAA Maintained.

If construction operations require a shutdown of 24 hours or greater in duration, or more than 4 hours daily on consecutive days, of a NAVAID owned by the airport but maintained by the FAA, provide a 45-day minimum notice to FAA ATO/Technical Operations prior to facility shutdown, using Strategic Event Coordination (SEC) Form 6000.26 contained within FAA Order 6000.15, *General Maintenance Handbook for National Airspace System (NAS) Facilities*.

2.13.5.3.2 FAA Owned.

1. The airport operator must notify the appropriate FAA ATO Service Area Planning and Requirements (P&R) Group a minimum of 45 days prior to implementing an event that causes impacts to NAVAIDs, using SEC Form 6000.26.
2. Coordinate work for an FAA owned NAVAID shutdown with the local FAA ATO/Technical Operations office, including any necessary reimbursable agreements and flight checks. Detail procedures that address unanticipated utility outages and cable cuts that could impact FAA NAVAIDs. Refer to active Service Level Agreement with ATO for specifics.

2.14 **Inspection Requirements.**

2.14.1 Daily Inspections.

Inspections should be conducted at least daily, but more frequently if necessary to ensure conformance with the CSPP. A sample checklist is provided in Appendix D, Construction Project Daily Safety Inspection Checklist. See also AC 150/5200-18, *Airport Safety Self-Inspection.* Airport operators holding a Part 139 certificate are required to conduct self-inspections during unusual conditions, such as construction activities, that may affect safe air carrier operations.

2.14.2 Interim Inspections.

Inspections should be conducted of all areas to be (re)opened to aircraft traffic to ensure the proper operation of lights and signs, for correct markings, and absence of FOD. The contractor should conduct an inspection of the work area with airport operations personnel. The contractor should ensure that all construction materials have been secured, all pavement surfaces have been swept clean, all transition ramps have been properly constructed, and that surfaces have been appropriately marked for aircraft to operate safely. Only if all items on the list meet with the airport operator's approval should the air traffic control tower be notified to open the area to aircraft operations. The contractor should be required to retain a suitable workforce and the necessary equipment at the work area for any last minute cleanup that may be requested by the airport operator prior to opening the area.

2.14.3 Final Inspections.

New runways and extended runway closures may require safety inspections at certificated airports prior to allowing air carrier service. Coordinate with the FAA Airport Certification Safety Inspector (ACSI) to determine if a final inspection will be necessary.

2.15 **Underground Utilities.**

The CSPP and/or SPCD must include procedures for locating and protecting existing underground utilities, cables, wires, pipelines, and other underground facilities in excavation areas. This may involve coordinating with public utilities and FAA ATO/Technical Operations. Note that "One Call" or "Miss Utility" services do not include FAA ATO/Technical Operations.

2.16 **Penalties.**

The CSPP should detail penalty provisions for noncompliance with airport rules and regulations and the safety plans (for example, if a vehicle is involved in a runway incursion). Such penalties typically include rescission of driving privileges or access to the AOA.

2.17 **Special Conditions.**

The CSPP must detail any special conditions that affect the operation of the airport and will require the activation of any special procedures (for example, low-visibility operations, snow removal, aircraft in distress, aircraft accident, security breach, Vehicle / Pedestrian Deviation (VPD) and other activities requiring construction suspension/resumption).

2.18 **Runway and Taxiway Visual Aids.**

This includes marking, lighting, signs, and visual NAVAIDs. The CSPP must ensure that areas where aircraft will be operating are clearly and visibly separated from construction areas, including closed runways. Throughout the duration of the construction project, verify that these areas remain clearly marked and visible at all times and that marking, lighting, signs, and visual NAVAIDs that are to continue to perform their functions during construction remain in place and operational. Visual NAVAIDs that are not serving their intended function during construction must be temporarily disabled, covered, or modified as necessary. The CSPP must address the following, as appropriate:

2.18.1 General.

Airport markings, lighting, signs, and visual NAVAIDs must be clearly visible to pilots, not misleading, confusing, or deceptive. All must be secured in place to prevent movement by prop wash, jet blast, wing vortices, and other wind currents and constructed of materials that will minimize damage to an aircraft in the event of inadvertent contact. Items used to secure such markings must be of a color similar to the marking.

2.18.2 Markings.

During the course of construction projects, temporary pavement markings are often required to allow for aircraft operations during or between work periods. During the design phase of the project, the designer should coordinate with the project manager,

airport operations, airport users, the FAA Airports project manager, and Airport Certification Safety Inspector for Part 139 airports to determine minimum temporary markings. The FAA Airports project manager will, wherever a runway is closed, coordinate with the appropriate FAA Flight Standards Office and disseminate findings to all parties. Where possible, the temporary markings on finish grade pavements should be placed to mirror the dimensions of the final markings. Markings must be in compliance with the standards of AC 150/5340-1, *Standards for Airport Markings*, except as noted herein. Runways and runway exit taxiways closed to aircraft operations are marked with a yellow X. The preferred visual aid to depict temporary runway closure is the lighted X signal placed on or near the runway designation numbers. (See paragraph 2.18.2.1.2.)

2.18.2.1 **Closed Runways and Taxiways.**

2.18.2.1.1 Permanently Closed Runways.

For runways, obliterate the threshold marking, runway designation marking, and touchdown zone markings, and place an X at each end and at 1,000-foot (300 m) intervals. For a multiple runway environment, if the lighted X on a designated number will be located in the RSA of an adjacent active runway, locate the lighted X farther down the closed runway to clear the RSA of the active runway. In addition, the closed runway numbers located in the RSA of an active runway must be marked with a flat yellow X.

2.18.2.1.2 Temporarily Closed Runways.

For runways that have been temporarily closed, place an X at each end of the runway directly on or as near as practicable to the runway designation numbers. For a multiple runway environment, if the lighted X on a designated number will be located in the RSA of an adjacent active runway, locate the lighted X farther down the closed runway to clear the RSA of the active runway. In addition, the closed runway numbers located in the RSA of an active runway must be marked with a flat yellow X. See Figure 2-3. See also paragraph 2.18.3.3.

2.18.2.1.3 Partially Closed Runways and Displaced Thresholds.

When threshold markings are needed to identify the temporary beginning of the runway that is available for landing, the markings must comply with AC 150/5340-1. An X is not used on a partially closed runway or a runway with a displaced threshold. See paragraph 2.7.1.1 for the difference between partially closed runways and runways with displaced thresholds. Because of the temporary nature of threshold displacement due to construction, it is not necessary to re-adjust the existing runway centerline markings to meet standard spacing for a runway with a visual approach. Some of the requirements below may be waived in the cases of low-activity airports and/or short duration changes that are measured in days rather than weeks. Consider whether the presence of an airport traffic

control tower allows for the development of special procedures. Contact the appropriate FAA Airports Regional or District Office for assistance.

Figure 2-3. Markings for a Temporarily Closed Runway

1. **Partially Closed Runways.** Pavement markings for temporary closed portions of the runway consist of a runway threshold bar, runway designation, and yellow chevrons to identify pavement areas that are unsuitable for takeoff or landing (see AC 150/5340-1). Obliterate or cover markings prior to the moved threshold. Existing touchdown zone markings beyond the moved threshold may remain in place. Obliterate aiming point markings. Issue appropriate NOTAMs regarding any nonstandard markings. See Figure 2-4.

2. **Displaced Thresholds.** Pavement markings for a displaced threshold consist of a runway threshold bar, runway designation, and white arrowheads with and without arrow shafts. These markings are required to identify the portion of the runway before the displaced threshold to provide centerline guidance for pilots during approaches, takeoffs, and landing rollouts from the opposite direction. See AC 150/5340-1. Obliterate markings prior to the displaced threshold. Existing touchdown zone markings beyond the displaced threshold may remain in place. Obliterate aiming point markings. Issue appropriate NOTAMs regarding any nonstandard markings. See Figure 2-2.

2.18.2.1.4 Taxiways.

1. **Permanently Closed Taxiways.** AC 150/5300-13 *Airport Design*, notes that it is preferable to remove the pavement, but for pavement that is to remain, place an X at the entrance to both ends of the closed section. Obliterate taxiway centerline markings, including runway leadoff lines, leading to the closed taxiway. See Figure 2-4.

Figure 2-4. Temporary Taxiway Closure

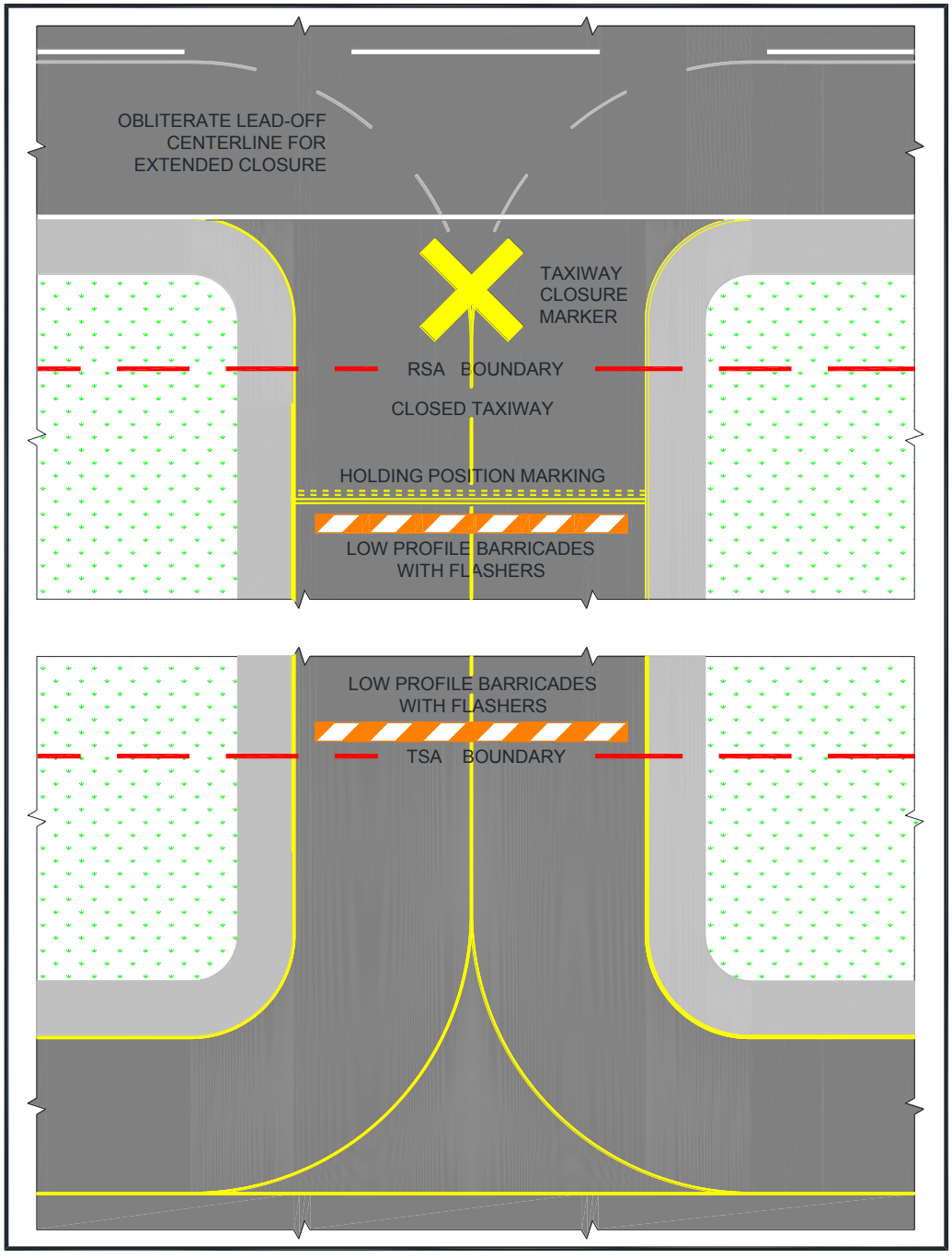

2. **Temporarily Closed Taxiways.** Place barricades outside the safety area of intersecting taxiways. For runway/taxiway intersections, place an X at the entrance to the closed taxiway from the runway. If the taxiway will be closed for an extended period, obliterate taxiway centerline markings, including runway leadoff lines and taxiway to taxiway turns, leading to the closed section. Always obliterate runway lead-off lines for high speed exits, regardless of the duration of the closure. If the centerline markings will be reused upon reopening the taxiway, it is preferable to paint over the marking. This will result in less damage to the pavement when the upper layer of paint is ultimately removed. See Figure 2-4.

2.18.2.1.5 Temporarily Closed Airport.

When the airport is closed temporarily, mark all the runways as closed.

2.18.2.2 If unable to paint temporary markings on the pavement, construct them from any of the following materials: fabric, colored plastic, painted sheets of plywood, or similar materials. They must be properly configured and appropriately secured to prevent movement by prop wash, jet blast, or other wind currents. Items used to secure such markings must be of a color similar to the marking.

2.18.2.3 It may be necessary to remove or cover runway markings, including but not limited to, runway designation markings, threshold markings, centerline markings, edge stripes, touchdown zone markings and aiming point markings, depending on the length of construction and type of activity at the airport. When removing runway markings, apply the same treatment to areas between stripes or numbers, as the cleaned area will appear to pilots as a marking in the shape of the treated area.

2.18.2.4 If it is not possible to install threshold bars, chevrons, and arrows on the pavement, "temporary outboard white threshold bars and yellow arrowheads", see Figure 2-5, may be used. Locate them outside of the runway pavement surface on both sides of the runway. The dimensions must be as shown in Figure 2-5. If the markings are not discernible on grass or snow, apply a black background with appropriate material over the ground to ensure they are clearly visible.

2.18.2.5 The application rate of paint to mark a short-term temporary runway and taxiway markings may deviate from the standard (see Item P-620, "Runway and Taxiway Painting," in AC 150/5370-10), but the dimensions must meet the existing standards. When applying temporary markings at night, it is recommended that the fast curing, Type II paint be used to help offset the higher humidity and cooler temperatures often experienced at night. Diluting the paint will substantially increase cure time and is not recommended. Glass beads are not recommended for temporary markings. Striated markings may also be used for certain temporary markings. AC

150/5340-1, *Standards for Airport Markings*, has additional guidance on temporary markings.

Figure 2-5. Temporary Outboard White Threshold Bars and Yellow Arrowheads

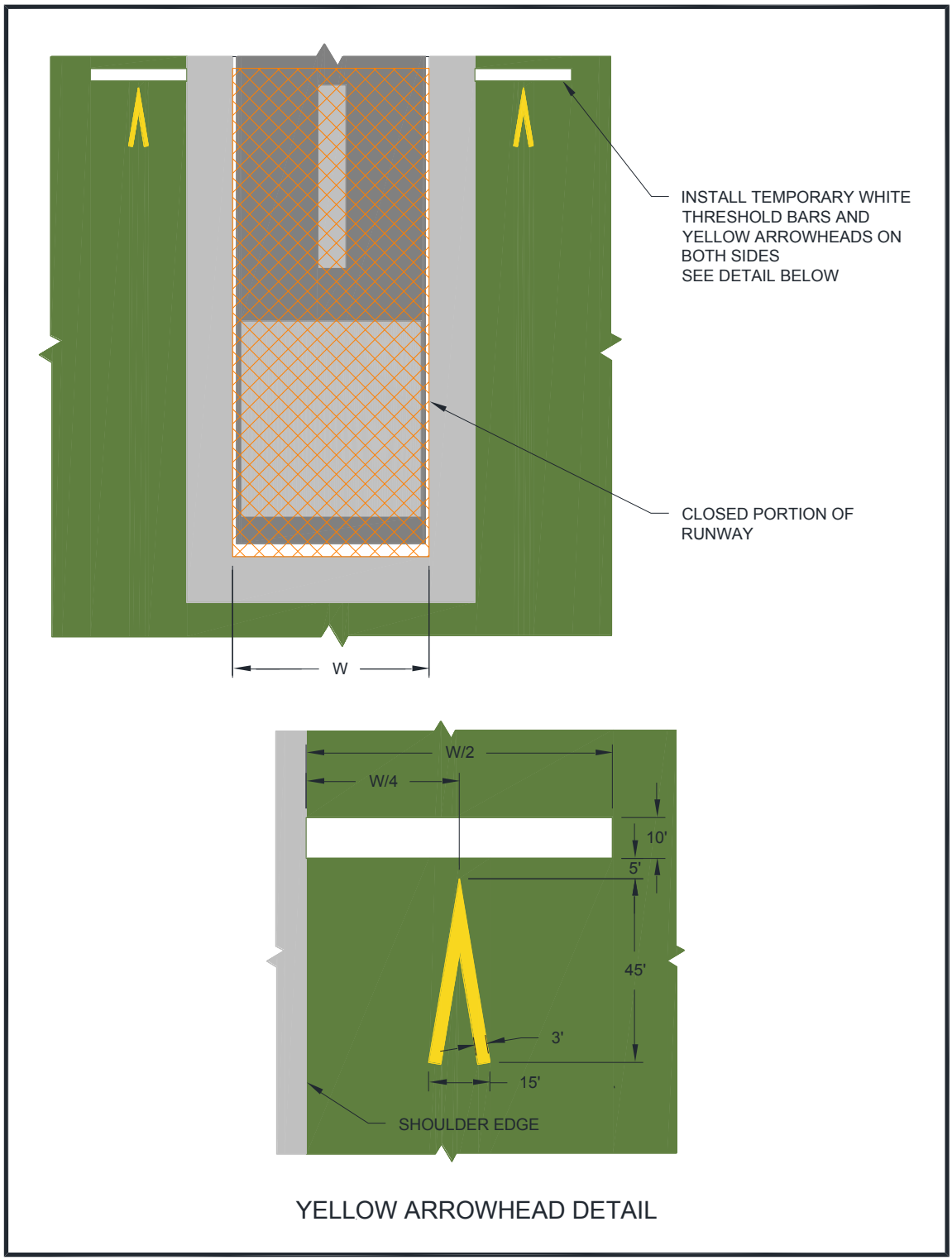

2.18.3 Lighting and Visual NAVAIDs.

This paragraph refers to standard runway and taxiway lighting systems. See below for hazard lighting. Lighting installation must be in conformance with AC 150/5340-30, *Design and Installation Details for Airport Visual Aids,* and fixture design in conformance with AC 150/5345-50, *Specification for Portable Runway and Taxiway Lights.* When disconnecting runway and taxiway lighting fixtures, disconnect the associated isolation transformers. See AC 150/5340-26, *Maintenance of Airport Visual Aid Facilities*, for disconnect procedures and safety precautions. Alternately, cover the light fixture in such a way as to prevent light leakage. Avoid removing the lamp from energized fixtures because an excessive number of isolation transformers with open secondaries may damage the regulators and/or increase the current above its normal value. Secure, identify, and place any above ground temporary wiring in conduit to prevent electrocution and fire ignition sources. Maintain mandatory hold signs to operate normally in any situation where pilots or vehicle drivers could mistakenly be in that location. At towered airports certificated under Part 139, holding position signs are required to be illuminated on open taxiways crossing to closed or inactive runways. If the holding position sign is installed on the runway circuit for the closed runway, install a jumper to the taxiway circuit to provide power to the holding position sign for nighttime operations. Where it is not possible to maintain power to signs that would normally be operational, install barricades to exclude aircraft. Figure 2-1, Figure 2-2, Figure 2-3, and Figure 2-4 illustrate temporary changes to lighting and visual NAVAIDs.

2.18.3.1 **Permanently Closed Runways and Taxiways.**

For runways and taxiways that have been permanently closed, disconnect the lighting circuits.

2.18.3.2 **Temporarily Closed Runways and New Runways Not Yet Open to Air Traffic.**

If available, use a lighted X, both at night and during the day, placed at each end of the runway on or near the runway designation numbers facing the approach. (Note that the lighted X must be illuminated at all times that it is on a runway.) The use of a lighted X is required if night work requires runway lighting to be on. See AC 150/5345-55, *Specification for L-893, Lighted Visual Aid to Indicate Temporary Runway Closure.* For runways that have been temporarily closed, but for an extended period, and for those with pilot controlled lighting, disconnect the lighting circuits or secure switches to prevent inadvertent activation. For runways that will be opened periodically, coordinate procedures with the FAA air traffic manager or, at airports without an ATCT, the airport operator. Activate stop bars if available. Figure 2-6 shows a lighted X by day. Figure 2-7 shows a lighted X at night.

Figure 2-6. Lighted X in Daytime

Figure 2-7. Lighted X at Night

2.18.3.3 **Partially Closed Runways and Displaced Thresholds.**

When a runway is partially closed, a portion of the pavement is unavailable for any aircraft operation, meaning taxiing and landing or taking off in either direction. A displaced threshold, by contrast, is put in place to ensure obstacle clearance by landing aircraft. The pavement prior to the displaced threshold is available for takeoff in the direction of the displacement, and for landing and takeoff in the opposite direction. Misunderstanding this difference and issuance of a subsequently inaccurate NOTAM can result in a hazardous situation. For both partially

closed runways and displaced thresholds, approach lighting systems at the affected end must be placed out of service.

2.18.3.3.1 Partially Closed Runways.

Disconnect edge and threshold lights on that part of the runway at and behind the threshold (that is, the portion of the runway that is closed). Alternately, cover the light fixtures in such a way as to prevent light leakage. See Figure 2-1.

2.18.3.3.2 Temporary Displaced Thresholds.

Edge lighting in the area of the displacement emits red light in the direction of approach and yellow light (white for visual runways) in the opposite direction. If the displacement is 700 feet or less, blank out centerline lights in the direction of approach or place the centerline lights out of service. If the displacement is over 700 feet, place the centerline lights out of service. See AC 150/5340-30 for details on lighting displaced thresholds. See Figure 2-2.

2.18.3.3.3 Temporary runway thresholds and runway ends must be lighted if the runway is lighted and it is the intended threshold for night landings or instrument meteorological conditions.

2.18.3.3.4 A temporary threshold on an unlighted runway may be marked by retroreflective, elevated markers in addition to markings noted in paragraph 2.18.2.1.3. Markers seen by aircraft on approach are green. Markers at the rollout end of the runway are red. At certificated airports, temporary elevated threshold markers must be mounted with a frangible fitting (see 14 CFR Part 139.309). At non-certificated airports, the temporary elevated threshold markings may either be mounted with a frangible fitting or be flexible. See AC 150/5345-39, *Specification for L-853, Runway and Taxiway Retroreflective Markers.*

2.18.3.3.5 Temporary threshold lights and runway end lights and related visual NAVAIDs are installed outboard of the edges of the full-strength pavement only when they cannot be installed on the pavement. They are installed with bases at grade level or as low as possible, but not more than 3 inch (7.6 cm) above ground. (The standard above ground height for airport lighting fixtures is 14 inches (35 cm)). When any portion of a base is above grade, place properly compacted fill around the base to minimize the rate of gradient change so aircraft can, in an emergency, cross at normal landing or takeoff speeds without incurring significant damage. See AC 150/5370-10.

2.18.3.3.6 Maintain threshold and edge lighting color and spacing standards as described in AC 150/5340-30. Battery powered, solar, or portable lights that meet the criteria in AC 150/5345-50 may be used. These systems are intended primarily for visual flight rules (VFR) aircraft operations but may

be used for instrument flight rules (IFR) aircraft operations, upon individual approval from the Flight Standards Division of the applicable FAA Regional Office.

2.18.3.3.7 When runway thresholds are temporarily displaced, reconfigure yellow lenses (caution zone), as necessary, and place the centerline lights out of service.

2.18.3.3.8 Relocate the Visual Glide Slope Indicator (VGSI), such as Visual Approach Slope Indicator (VASI) and Precision Approach Path Indicator (PAPI); other airport lights, such as Runway End Identifier Lights (REIL); and approach lights to identify the temporary threshold. Another option is to disable the VGSI or any equipment that would give misleading indications to pilots as to the new threshold location. Installation of temporary visual aids may be necessary to provide adequate guidance to pilots on approach to the affected runway. If the FAA owns and operates the VGSI, coordinate its installation or disabling with the local ATO/Technical Operations Office. Relocation of such visual aids will depend on the duration of the project and the benefits gained from the relocation, as this can result in great expense. See FAA JO 6850.2, *Visual Guidance Lighting Systems,* for installation criteria for FAA owned and operated NAVAIDs.

2.18.3.3.9 Issue a NOTAM to inform pilots of temporary lighting conditions.

2.18.3.4 **Temporarily Closed Taxiways.**

If possible, deactivate the taxiway lighting circuits. When deactivation is not possible (for example other taxiways on the same circuit are to remain open), cover the light fixture in a way as to prevent light leakage.

2.18.4 Signs.

To the extent possible, signs must be in conformance with AC 150/5345-44, *Specification for Runway and Taxiway Signs*, and AC 150/5340-18, *Standard for Airport Sign Systems.*

2.18.4.1 **Existing Signs.**

Runway exit signs are to be covered for closed runway exits. Outbound destination signs are to be covered for closed runways. Any time a sign does not serve its normal function or would provide conflicting information, it must be covered or removed to prevent misdirecting pilots. Note that information signs identifying a crossing taxiway continue to perform their normal function even if the crossing taxiway is closed. For long term construction projects, consider relocating signs, especially runway distance remaining signs.

2.18.4.2 **Temporary Signs.**

Orange construction signs comprise a message in black on an orange background. Orange construction signs may help pilots be aware of changed conditions. The airport operator may choose to introduce these signs as part of a movement area construction project to increase situational awareness when needed. Locate signs outside the taxiway safety limits and ahead of construction areas so pilots can take timely action. Use temporary signs judiciously, striking a balance between the need for information and the increase in pilot workload. When there is a concern of pilot "information overload," the applicability of mandatory hold signs must take precedence over orange construction signs recommended during construction. Temporary signs must meet the standards for such signs in Engineering Brief 93, *Guidance for the Assembly and Installation of Temporary Orange Construction Signs.* Many criteria in AC 150/5345-44, *Specification for Runway and Taxiway Signs,* are referenced in the Engineering Brief. Permissible sign legends are:

1. CONSTRUCTION AHEAD,
2. CONSTRUCTION ON RAMP, and
3. RWY XX TAKEOFF RUN AVAILABLE XXX FT.

Phasing, supported by drawings and sign schedule, for the installation of orange construction signs must be included in the CSPP or SPCD.

2.18.4.2.1 Takeoff Run Available (TORA) signs.

Recommended: Where a runway has been shortened for takeoff, install orange TORA signs well before the hold lines, such as on a parallel taxiway prior to a turn to a runway hold position. See EB 93 for sign size and location.

2.18.4.2.2 Sign legends are shown in Figure F-1.

Note: See Figure E-1, Figure E-2, Figure E-3, Figure F-2, and Figure F-3 for examples of orange construction sign locations.

2.19 **Marking and Signs for Access Routes.**

The CSPP should indicate that pavement markings and signs for construction personnel will conform to AC 150/5340-18 and, to the extent practicable, with the Federal Highway Administration Manual on Uniform Traffic Control Devices (MUTCD) and/or State highway specifications. Signs adjacent to areas used by aircraft must comply with the frangibility requirements of AC 150/5220-23, *Frangible Connections,* which may require modification to size and height guidance in the MUTCD.

2.20 **Hazard Marking, Lighting and Signing.**

2.20.1 Hazard marking, lighting, and signing prevent pilots from entering areas closed to aircraft, and prevent construction personnel from entering areas open to aircraft. The CSPP must specify prominent, comprehensible warning indicators for any area affected by construction that is normally accessible to aircraft, personnel, or vehicles. Hazard marking and lighting must also be specified to identify open manholes, small areas under repair, stockpiled material, waste areas, and areas subject to jet blast. Also consider less obvious construction-related hazards and include markings to identify FAA, airport, and National Weather Service facilities cables and power lines; instrument landing system (ILS) critical areas; airport surfaces, such as RSA, OFA, and OFZ; and other sensitive areas to make it easier for contractor personnel to avoid these areas.

2.20.2 Equipment.

2.20.2.1 **Barricades.**

Low profile barricades, including traffic cones, (weighted or sturdily attached to the surface) are acceptable methods used to identify and define the limits of construction and hazardous areas on airports. Careful consideration must be given to selecting equipment that poses the least danger to aircraft but is sturdy enough to remain in place when subjected to typical winds, prop wash and jet blast. The spacing of barricades must be such that a breach is physically prevented barring a deliberate act. For example, if barricades are intended to exclude aircraft, gaps between barricades must be smaller than the wingspan of the smallest aircraft to be excluded; if barricades are intended to exclude vehicles, gaps between barricades must be smaller than the width of the excluded vehicles, generally 4 feet (1.2 meters). Provision must be made for ARFF access if necessary. If barricades are intended to exclude pedestrians, they must be continuously linked. Continuous linking may be accomplished through the use of ropes, securely attached to prevent FOD.

2.20.2.2 **Lights.**

Lights must be red, either steady burning or flashing, and must meet the luminance requirements of the State Highway Department. Batteries powering lights will last longer if lights flash. Lights must be mounted on barricades and spaced at no more than 10 feet (3 meters). Lights must be operated between sunset and sunrise and during periods of low visibility whenever the airport is open for operations. They may be operated by photocell, but this may require that the contractor turn them on manually during periods of low visibility during daytime hours.

2.20.2.3 **Supplement Barricades with Signs (for example) As Necessary.**

Examples are “No Entry” and “No Vehicles.” Be aware of the increased effects of wind and jet blast on barricades with attached signs.

2.20.2.4 **Air Operations Area – General.**

Barricades are not permitted in any active safety area or on the runway side of a runway hold line. Within a runway or taxiway object free area, and on aprons, use orange traffic cones, flashing or steady burning red lights as noted above, highly reflective collapsible barricades marked with diagonal, alternating orange and white stripes; and/or signs to separate all construction/maintenance areas from the movement area. Barricades may be supplemented with alternating orange and white flags at least 20 by 20 inch (50 by 50 cm) square and securely fastened to eliminate FOD. All barricades adjacent to any open runway or taxiway / taxilane safety area, or apron must be as low as possible to the ground, and no more than 18 inches high, exclusive of supplementary lights and flags. Barricades must be of low mass; easily collapsible upon contact with an aircraft or any of its components; and weighted or sturdily attached to the surface to prevent displacement from prop wash, jet blast, wing vortex, and other surface wind currents. If affixed to the surface, they must be frangible at grade level or as low as possible, but not to exceed 3 inch (7.6 cm) above the ground. Figure 2-8 and Figure 2-9 show sample barricades with proper coloring and flags.

Figure 2-8. Interlocking Barricades

Figure 2-9. Low Profile Barricades

2.20.2.5 **Air Operations Area – Runway/Taxiway Intersections.**

Use highly reflective barricades with lights to close taxiways leading to closed runways. Evaluate all operating factors when determining how to mark temporary closures that can last from 10 to 15 minutes to a much longer period of time. However, even for closures of relatively short duration, close all taxiway/runway intersections with barricades. The use of traffic cones is appropriate for short duration closures.

2.20.2.6 **Air Operations Area – Other.**

Beyond runway and taxiway object free areas and aprons, barricades intended for construction vehicles and personnel may be many different shapes and made from various materials, including railroad ties, sawhorses, jersey barriers, or barrels.

2.20.2.7 **Maintenance.**

The construction specifications must include a provision requiring the contractor to have a person on call 24 hours a day for emergency maintenance of airport hazard lighting and barricades. The contractor must file the contact person's information with the airport operator. Lighting should be checked for proper operation at least once per day, preferably at dusk.

2.21 Work Zone Lighting for Nighttime Construction.

Lighting equipment must adequately illuminate the work area if the construction is to be performed during nighttime hours. Refer to AC 150/5370-10 for minimum illumination levels for nighttime paving projects. Additionally, it is recommended that all support equipment, except haul trucks, be equipped with artificial illumination to safely

illuminate the area immediately surrounding their work areas. The lights should be positioned to provide the most natural color illumination and contrast with a minimum of shadows. The spacing must be determined by trial. Light towers should be positioned and adjusted to aim away from ATCT cabs and active runways to prevent blinding effects. Shielding may be necessary. Light towers should be removed from the construction site when the area is reopened to aircraft operations. Construction lighting units should be identified and generally located on the construction phasing plans in relationship to the ATCT and active runways and taxiways.

2.22 **Protection of Runway and Taxiway Safety Areas.**

Runway and taxiway safety areas, OFZs, OFAs, and approach surfaces are described in AC 150/5300-13. Protection of these areas includes limitations on the location and height of equipment and stockpiled material. An FAA airspace study may be required. Coordinate with the appropriate FAA Airports Regional or District Office if there is any doubt as to requirements or dimensions (see paragraph 2.13.5) as soon as the location and height of materials or equipment are known. The CSPP should include drawings showing all safety areas, object free areas, obstacle free zones and approach departure surfaces affected by construction.

2.22.1 Runway Safety Area (RSA).

A runway safety area is the defined surface surrounding the runway prepared or suitable for reducing the risk of damage to airplanes in the event of an undershoot, overshoot, or excursion from the runway (see AC 150/5300-13). Construction activities within the existing RSA are subject to the following conditions:

2.22.1.1 No construction may occur within the existing RSA while the runway is open for aircraft operations. The RSA dimensions may be temporarily adjusted if the runway is restricted to aircraft operations requiring an RSA that is equal to the RSA width and length beyond the runway ends available during construction. (See AC 150/5300-13). The temporary use of declared distances and/or partial runway closures may provide the necessary RSA under certain circumstances. Coordinate with the appropriate FAA Airports Regional or District Office to have declared distances information published, and appropriate NOTAMs issued. See AC 150/5300-13 for guidance on the use of declared distances.

2.22.1.2 The airport operator must coordinate the adjustment of RSA dimensions as permitted above with the appropriate FAA Airports Regional or District Office and the local FAA air traffic manager and issue a NOTAM.

2.22.1.3 The CSPP and SPCD must provide procedures for ensuring adequate distance for protection from blasting operations, if required by operational considerations.

2.22.1.4 **Excavations.**

2.22.1.4.1 Open trenches or excavations are not permitted within the RSA while the runway is open. Backfill trenches before the runway is opened. If backfilling excavations before the runway must be opened is impracticable, cover the excavations appropriately. Covering for open trenches must be designed to allow the safe operation of the heaviest aircraft operating on the runway across the trench without damage to the aircraft.

2.22.1.4.2 Construction contractors must prominently mark open trenches and excavations at the construction site with red or orange flags, as approved by the airport operator, and light them with red lights during hours of restricted visibility or darkness.

2.22.1.5 **Erosion Control.**

Soil erosion must be controlled to maintain RSA standards, that is, the RSA must be cleared and graded and have no potentially hazardous ruts, humps, depressions, or other surface variations, and capable, under dry conditions, of supporting snow removal equipment, aircraft rescue and fire fighting equipment, and the occasional passage of aircraft without causing structural damage to the aircraft.

2.22.2 Runway Object Free Area (ROFA).

Construction, including excavations, may be permitted in the ROFA. However, equipment must be removed from the ROFA when not in use, and material should not be stockpiled in the ROFA if not necessary. Stockpiling material in the OFA requires submittal of a 7460-1 form and justification provided to the appropriate FAA Airports Regional or District Office for approval.

2.22.3 Taxiway Safety Area (TSA).

2.22.3.1 A taxiway safety area is a defined surface alongside the taxiway prepared or suitable for reducing the risk of damage to an airplane unintentionally departing the taxiway. (See AC 150/5300-13.) Since the width of the TSA is equal to the wingspan of the design aircraft, no construction may occur within the TSA while the taxiway is open for aircraft operations. The TSA dimensions may be temporarily adjusted if the taxiway is restricted to aircraft operations requiring a TSA that is equal to the TSA width available during construction. Give special consideration to TSA dimensions at taxiway turns and intersections. (see AC 150/5300-13).

2.22.3.2 The airport operator must coordinate the adjustment of the TSA width as permitted above with the appropriate FAA Airports Regional or District Office and the FAA air traffic manager and issue a NOTAM.

2.22.3.3 The CSPP and SPCD must provide procedures for ensuring adequate distance for protection from blasting operations.

2.22.3.4 **Excavations.**

1. Curves. Open trenches or excavations are not permitted within the TSA while the taxiway is open. Trenches should be backfilled before the taxiway is opened. If backfilling excavations before the taxiway must be opened is impracticable, cover the excavations appropriately. Covering for open trenches must be designed to allow the safe operation of the heaviest aircraft operating on the taxiway across the trench without damage to the aircraft.
2. Straight Sections. Open trenches or excavations are not permitted within the TSA while the taxiway is open for unrestricted aircraft operations. Trenches should be backfilled before the taxiway is opened. If backfilling excavations before the taxiway must be opened is impracticable, cover the excavations to allow the safe passage of ARFF equipment and of the heaviest aircraft operating on the taxiway across the trench without causing damage to the equipment or aircraft. In rare circumstances where the section of taxiway is indispensable for aircraft movement, open trenches or excavations may be permitted in the TSA while the taxiway is open to aircraft operations, subject to the following restrictions:
    a. Taxiing speed is limited to 10 mph.
    b. Appropriate NOTAMs are issued.
    c. Marking and lighting meeting the provisions of paragraphs 2.18 and 2.20 are implemented.
    d. Low mass, low-profile lighted barricades are installed.
    e. Appropriate temporary orange construction signs are installed.
3. Construction contractors must prominently mark open trenches and excavations at the construction site with red or orange flags, as approved by the airport operator, and light them with red lights during hours of restricted visibility or darkness.

2.22.3.5 **Erosion control.**

Soil erosion must be controlled to maintain TSA standards, that is, the TSA must be cleared and graded and have no potentially hazardous ruts, humps, depressions, or other surface variations, and capable, under dry conditions, of supporting snow removal equipment, aircraft rescue and firefighting equipment, and the occasional passage of aircraft without causing structural damage to the aircraft.

2.22.4 Taxiway Object Free Area (TOFA).

Unlike the Runway Object Free Area, aircraft wings regularly penetrate the taxiway object free area during normal operations. Thus, the restrictions are more stringent. Except as provided below, no construction may occur within the taxiway object free area while the taxiway is open for aircraft operations.

2.22.4.1 The taxiway object free area dimensions may be temporarily adjusted if the taxiway is restricted to aircraft operations requiring a taxiway object free area that is equal to the taxiway object free area width available. Give special consideration to TOFA dimensions at taxiway turns and intersections.

2.22.4.2 Offset taxiway centerline and edge pavement markings (do not use glass beads) may be used as a temporary measure to provide the required taxiway object free area. Where offset taxiway pavement markings are provided, centerline lighting, centerline reflectors, or taxiway edge reflectors are required. Existing lighting that does not coincide with the temporary markings must be taken out of service.

2.22.4.3 Construction activity, including open excavations, may be accomplished without adjusting the width of the taxiway object free area, subject to the following restrictions:

2.22.4.3.1 Taxiing speed is limited to 10 mph.

2.22.4.3.2 NOTAMs issued advising taxiing pilots of hazard and recommending reduced taxiing speeds on the taxiway.

2.22.4.3.3 Marking and lighting meeting the provisions of paragraphs 2.18 and 2.20 are implemented.

2.22.4.3.4 If desired, appropriate orange construction signs are installed. See paragraph 2.18.4.2 and Appendix F.

2.22.4.3.5 Five-foot clearance is maintained between equipment and materials and any part of an aircraft (includes wingtip overhang). If such clearance can only be maintained if an aircraft does not have full use of the entire taxiway width (with its main landing gear at the edge of the usable pavement), then it will be necessary to move personnel and equipment for the passage of that aircraft.

2.22.4.3.6 Flaggers furnished by the contractor must be used to direct and control construction equipment and personnel to a pre-established setback distance for safe passage of aircraft, and airline and/or airport personnel. Flaggers must also be used to direct taxiing aircraft. Due to liability issues, the airport operator should require airlines to provide flaggers for directing taxiing aircraft.

2.22.5 Obstacle Free Zone (OFZ).

In general, personnel, material, and/or equipment may not penetrate the OFZ while the runway is open for aircraft operations. If a penetration to the OFZ is necessary, it may be possible to continue aircraft operations through operational restrictions. Coordinate with the FAA through the appropriate FAA Airports Regional or District Office.

2.22.6 Runway Approach/Departure Areas and Clearways.

All personnel, materials, and/or equipment must remain clear of the applicable threshold siting surfaces, as defined in AC 150/5300-13. Objects that do not penetrate these surfaces may still be obstructions to air navigation and may affect standard instrument approach procedures. Coordinate with the FAA through the appropriate FAA Airports Regional or District Office.

2.22.6.1 Construction activity in a runway approach/departure area may result in the need to partially close a runway or displace the existing runway threshold. Partial runway closure, displacement of the runway threshold, as well as closure of the complete runway and other portions of the movement area also require coordination through the airport operator with the appropriate FAA air traffic manager (FSS if non-towered) and ATO/Technical Operations (for affected NAVAIDS) and airport users.

2.22.6.2 **Caution About Partial Runway Closures.**

When filing a NOTAM for a partial runway closure, clearly state that the portion of pavement located prior to the threshold is not available for landing and departing traffic. In this case, the threshold has been moved for both landing and takeoff purposes (this is different than a displaced threshold). There may be situations where the portion of closed runway is available for taxiing only. If so, the NOTAM must reflect this condition).

2.22.6.3 **Caution About Displaced Thresholds.**

Implementation of a displaced threshold affects runway length available for aircraft landing over the displacement. Depending on the reason for the displacement (to provide obstruction clearance or RSA), such a displacement may also require an adjustment in the landing distance available and accelerate-stop distance available in the opposite direction. If project scope includes personnel, equipment, excavation, or other work within the existing RSA of any usable runway end, do not implement a displaced threshold unless arrivals and departures toward the construction activity are prohibited. Instead, implement a partial closure.

2.23 **Other Limitations on Construction.**

The CSPP must specify any other limitations on construction, including but not limited to:

2.23.1 Prohibitions.

2.23.1.1 No use of tall equipment (cranes, concrete pumps, and so on) unless a 7460-1 determination letter is issued for such equipment.

2.23.1.2 No use of open flame welding or torches unless fire safety precautions are provided and the airport operator has approved their use.

2.23.1.3 No use of electrical blasting caps on or within 1,000 feet (300 meters) of the airport property. See AC 150/5370-10.

2.23.2 Restrictions.

2.23.2.1 Construction suspension required during specific airport operations.

2.23.2.2 Areas that cannot be worked on simultaneously.

2.23.2.3 Day or night construction restrictions.

2.23.2.4 Seasonal construction restrictions.

2.23.2.5 Temporary signs not approved by the airport operator.

2.23.2.6 Grades changes that could result in unplanned effects on NAVAIDs.

CHAPTER 3. GUIDELINES FOR WRITING A CSPP

3.1 General Requirements.

The CSPP is a standalone document written to correspond with the subjects outlined in paragraph 2.4. The CSPP is organized by numbered sections corresponding to each subject listed in paragraph 2.4, and described in detail in paragraphs 2.5 - 2.23. Each section number and title in the CSPP matches the corresponding subject outlined in paragraph 2.4 (for example, 1. Coordination, 2. Phasing, 3. Areas and Operations Affected by the Construction Activity, and so on). With the exception of the project scope of work outlined in Section 2. Phasing, only subjects specific to operational safety during construction should be addressed.

3.2 Applicability of Subjects.

Each section should, to the extent practical, focus on the specific subject. Where an overlapping requirement spans several sections, the requirement should be explained in detail in the most applicable section. A reference to that section should be included in all other sections where the requirement may apply. For example, the requirement to protect existing underground FAA ILS cables during trenching operations could be considered FAA ATO coordination (Coordination, paragraph 2.5.3), an area and operation affected by the construction activity (Areas and Operations Affected by the Construction Activity, paragraph 2.7.1.4), a protection of a NAVAID (Protection of Navigational Aids (NAVAIDs), paragraph 2.8), or a notification to the FAA of construction activities (Notification of Construction Activities, paragraph 2.13.5.3.2). However, it is more specifically an underground utility requirement (Underground Utilities, paragraph 2.15). The procedure for protecting underground ILS cables during trenching operations should therefore be described in 2.4.2.11: "The contractor must coordinate with the local FAA System Support Center (SSC) to mark existing ILS cable routes along Runway 17-35. The ILS cables will be located by hand digging whenever the trenching operation moves within 10 feet of the cable markings." All other applicable sections should include a reference to 2.4.2.11: "ILS cables shall be identified and protected as described in 2.4.2.11" or "See 2.4.2.11 for ILS cable identification and protection requirements." Thus, the CSPP should be considered as a whole, with no need to duplicate responses to related issues.

3.3 Graphical Representations.

Construction safety drawings should be included in the CSPP as attachments. When other graphical representations will aid in supporting written statements, the drawings, diagrams, and/or photographs should also be attached to the CSPP. References should be made in the CSPP to each graphical attachment and may be made in multiple sections.

3.4 **Reference Documents.**

The CSPP must not incorporate a document by reference unless reproduction of the material in that document is prohibited. In that case, either copies of or a source for the referenced document must be provided to the contractor. Where this AC recommends references (e.g. as in paragraph 3.9) the intent is to include a reference to the corresponding section in the CSPP, not to this Advisory Circular.

3.5 **Restrictions.**

The CSPP should not be considered as a project design review document. The CSPP should also avoid mention of permanent ("as-built") features such as pavements, markings, signs, and lighting, except when such features are intended to aid in maintaining operational safety during the construction.

3.6 **Coordination.**

Include in this section a detailed description of conferences and meetings to be held both before and during the project. Include appropriate information from AC 150/5370-12. Discuss coordination procedures and schedules for each required FAA ATO Technical Operations shutdown and restart and all required flight inspections.

3.7 **Phasing.**

Include in this section a detailed scope of work description for the project as a whole and each phase of work covered by the CSPP. This includes all locations and durations of the work proposed. Attach drawings to graphically support the written scope of work. Detail in this section the sequenced phases of the proposed construction. Include a reference to paragraph 3.8, as appropriate.

3.8 **Areas and Operations Affected by Construction.**

Focus in this section on identifying the areas and operations affected by the construction. Describe corresponding mitigation that is not covered in detail elsewhere in the CSPP. Include references to paragraphs below as appropriate. Attach drawings as necessary to graphically describe affected areas and mechanisms proposed. See Appendix F for sample operational effects tables and figures.

3.9 **NAVAID Protection.**

List in this section all NAVAID facilities that will be affected by the construction. Identify NAVAID facilities that will be placed out of service at any time prior to or during construction activities. Identify individuals responsible for coordinating each shutdown and when each facility will be out of service. Include a reference to paragraph 3.6 for FAA ATO NAVAID shutdown, restart, and flight inspection coordination. Outline in detail procedures to protect each NAVAID facility remaining in service from interference by construction activities. Include a reference to paragraph 3.14 for the

issuance of NOTAMs as required. Include a reference to paragraph 3.16 for the protection of underground cables and piping serving NAVAIDs. If temporary visual aids are proposed to replace or supplement existing facilities, include a reference to paragraph 3.19. Attach drawings to graphically indicate the affected NAVAIDS and the corresponding critical areas.

3.10 **Contractor Access.**

This will necessarily be the most extensive section of the CSPP. Provide sufficient detail so that a contractor not experienced in working on airports will understand the unique restrictions such work will require. Due to this extent, it should be broken down into subsections as described below:

3.10.1 Location of Stockpiled Construction Materials.

Describe in this section specific locations for stockpiling material. Note any height restrictions on stockpiles. Include a reference to paragraph 3.21 for hazard marking and lighting devices used to identify stockpiles. Include a reference to paragraph 3.11 for provisions to prevent stockpile material from becoming wildlife attractants. Include a reference to paragraph 3.12 for provisions to prevent stockpile material from becoming FOD. Attach drawings to graphically indicate the stockpile locations.

3.10.2 Vehicle and Pedestrian Operations.

While there are many items to be addressed in this major subsection of the CSPP, all are concerned with one main issue: keeping people and vehicles from areas of the airport where they don't belong. This includes preventing unauthorized entry to the AOA and preventing the improper movement of pedestrians or vehicles on the airport. In this section, focus on mechanisms to prevent construction vehicles and workers traveling to and from the worksite from unauthorized entry into movement areas. Specify locations of parking for both employee vehicles and construction equipment, and routes for access and haul roads. In most cases, this will best be accomplished by attaching a drawing. Quote from AC 150/5210-5 specific requirements for contractor vehicles rather than referring to the AC as a whole, and include special requirements for identifying HAZMAT vehicles. Quote from, rather than incorporate by reference, AC 150/5210-20 as appropriate to address the airport's rules for ground vehicle operations, including its training program. Discuss the airport's recordkeeping system listing authorized vehicle operators.

3.10.3 Two-Way Radio Communications.

Include a special section to identify all individuals who are required to maintain communications with Air Traffic (AT) at airports with active towers, or monitor CTAF at airports without or with closed ATCT. Include training requirements for all individuals required to communicate with AT. Individuals required to monitor AT frequencies should also be identified. If construction employees are also required to communicate by radio with Airport Operations, this procedure should be described in detail. Usage of vehicle mounted radios and/or portable radios should be addressed. Communication procedures for the event of disabled radio communication (that is, light

signals, telephone numbers, others) must be included. All radio frequencies should by identified (Tower, Ground Control, CTAF, UNICOM, ATIS, and so on).

3.10.4 Airport Security.

Address security as it applies to vehicle and pedestrian operations. Discuss TSA requirements, security badging requirements, perimeter fence integrity, gate security, and other needs. Attach drawings to graphically indicate secured and/or Security Identification Display Areas (SIDA), perimeter fencing, and available access points.

3.11 **Wildlife Management.**

Discuss in this section wildlife management procedures. Describe the maintenance of existing wildlife mitigation devices, such as perimeter fences, and procedures to limit wildlife attractants. Include procedures to notify Airport Operations of wildlife encounters. Include a reference to paragraph 3.10 for security (wildlife) fence integrity maintenance as required.

3.12 **FOD Management.**

In this section, discuss methods to control and monitor FOD: worksite housekeeping, ground vehicle tire inspections, runway sweeps, and so on. Include a reference to paragraph 3.15 for inspection requirements as required.

3.13 **HAZMAT Management.**

Describe in this section HAZMAT management procedures: fuel deliveries, spill recovery procedures, Safety Data Sheet (SDS), Material Safety Data Sheet (MSDS) or Product Safety Data Sheet (PSDS) availability, and other considerations. Any specific airport HAZMAT restrictions should also be identified. Include a reference to paragraph 3.10 for HAZMAT vehicle identification requirements. Quote from, rather than incorporate by reference, AC 150/5320-15.

3.14 **Notification of Construction Activities.**

List in this section the names and telephone numbers of points of contact for all parties affected by the construction project. We recommend a single list that includes all telephone numbers required under this section. Include emergency notification procedures for all representatives of all parties potentially impacted by the construction. Identify individual representatives – and at least one alternate – for each party. List both on-duty and off-duty contact information for each individual, including individuals responsible for emergency maintenance of airport construction hazard lighting and barricades. Describe procedures to coordinate immediate response to events that might adversely affect the operational safety of the airport (such as interrupted NAVAID service). Explain requirements for and the procedures for the issuance of Notices to Airmen (NOTAMs), notification to FAA required by 14 CFR Part 77 and Part 157 and in the event of affected NAVAIDs. For NOTAMs, identify an individual, and at least one alternate, responsible for issuing and cancelling each specific type of Notice to

Airmen (NOTAM) required. Detail notification methods for police, fire fighting, and medical emergencies. This may include 911, but should also include direct phone numbers of local police departments and nearby hospitals. Identify the E911 address of the airport and the emergency access route via haul roads to the construction site. Require the contractor to have this information available to all workers. The local Poison Control number should be listed. Procedures regarding notification of Airport Operations and/or the ARFF Department of such emergencies should be identified, as applicable. If airport radio communications are identified as a means of emergency notification, include a reference to paragraph 3.10. Differentiate between emergency and nonemergency notification of ARFF personnel, the latter including activities that affect ARFF water supplies and access roads. Identify the primary ARFF contact person and at least one alternate. If notification is to be made through Airport Operations, then detail this procedure. Include a method of confirmation from the ARFF department.

3.15 **Inspection Requirements.**

Describe in this section inspection requirements to ensure airfield safety compliance. Include a requirement for routine inspections by the resident engineer (RE) or other airport operator's representative and the construction contractors. If the engineering consultants and/or contractors have a Safety Officer who will conduct such inspections, identify this individual. Describe procedures for special inspections, such as those required to reopen areas for aircraft operations. Part 139 requires daily airfield inspections at certificated airports, but these may need to be more frequent when construction is in progress. Discuss the role of such inspections on areas under construction. Include a requirement to immediately remedy any deficiencies, whether caused by negligence, oversight, or project scope change.

3.16 **Underground Utilities.**

Explain how existing underground utilities will be located and protected. Identify each utility owner and include contact information for each company/agency in the master list. Address emergency response procedures for damaged or disrupted utilities. Include a reference to paragraph 3.14 for notification of utility owners of accidental utility disruption as required.

3.17 **Penalties.**

Describe in this section specific penalties imposed for noncompliance with airport rules and regulations, including the CSPP: SIDA violations, VPD, and others.

3.18 **Special Conditions.**

Identify any special conditions that may trigger specific safety mitigation actions outlined in this CSPP: low visibility operations, snow removal, aircraft in distress, aircraft accident, security breach, VPD, and other activities requiring construction suspension/resumption. Include a reference to paragraph 3.10 for compliance with airport safety and security measures and for radio communications as required. Include

a reference to paragraph 3.14 for emergency notification of all involved parties, including police/security, ARFF, and medical services.

3.19 **Runway and Taxiway Visual Aids.**

Include marking, lighting, signs, and visual NAVAIDS. Detail temporary runway and taxiway marking, lighting, signs, and visual NAVAIDs required for the construction. Discuss existing marking, lighting, signs, and visual NAVAIDs that are temporarily, altered, obliterated, or shut down. Consider non-federal facilities and address requirements for reimbursable agreements necessary for alteration of FAA facilities and for necessary flight checks. Identify temporary TORA signs or runway distance remaining signs if appropriate. Identify required temporary visual NAVAIDs such as REIL or PAPI. Quote from, rather than incorporate by reference, AC 150/5340-1, *Standards for Airport Markings;* AC 150/5340-18, *Standards for Airport Sign Systems;* and AC 150/5340-30, as required. Attach drawings to graphically indicate proposed marking, lighting, signs, and visual NAVAIDs.

3.20 **Marking and Signs for Access Routes.**

Detail plans for marking and signs for vehicle access routes. To the extent possible, signs should be in conformance with the Federal Highway Administration MUTCD and/or State highway specifications, not hand lettered. Detail any modifications to the guidance in the MUTCD necessary to meet frangibility/height requirements.

3.21 **Hazard Marking and Lighting.**

Specify all marking and lighting equipment, including when and where each type of device is to be used. Specify maximum gaps between barricades and the maximum spacing of hazard lighting. Identify one individual and at least one alternate responsible for maintenance of hazard marking and lighting equipment in the master telephone list. Include a reference to paragraph 3.14. Attach drawings to graphically indicate the placement of hazard marking and lighting equipment.

3.22 **Work Zone Lighting for Nighttime Construction.**

If work is to be conducted at night, specify all lighting equipment, including when and where each type of device is to be used. Indicate the direction lights are to be aimed and any directions that aiming of lights is prohibited. Specify any shielding necessary in instances where aiming is not sufficient to prevent interference with air traffic control and aircraft operations. Attach drawings to graphically indicate the placement and aiming of lighting equipment. Where the plan only indicates directions that aiming of lights is prohibited, the placement and positioning of portable lights must be proposed by the Contractor and approved by the airport operator’s representative each time lights are relocated or repositioned.

3.23 **Protection of Runway and Taxiway Safety Areas.**

This section should focus exclusively on procedures for protecting all safety areas, including those altered by the construction: methods of demarcation, limit of access, movement within safety areas, stockpiling and trenching restrictions, and so on. Reference AC 150/5300-13, as required. Include a reference to paragraph 3.10 for procedures regarding vehicle and personnel movement within safety areas. Include a reference to paragraph 3.10 for material stockpile restrictions as required. Detail requirements for trenching, excavations, and backfill. Include a reference to paragraph 3.21 for hazard marking and lighting devices used to identify open excavations as required. If runway and taxiway closures are proposed to protect safety areas, or if temporary displaced thresholds and/or revised declared distances are used to provide the required Runway Safety Area, include a reference to paragraphs 3.14 and 3.19. Detail procedures for protecting the runway OFZ, runway OFA, taxiway OFA and runway approach surfaces including those altered by the construction: methods of demarcation, limit of cranes, storage of equipment, and so on. Quote from, rather than incorporate by reference, AC 150/5300-13, as required. Include a reference to paragraph 3.24 for height (i.e., crane) restrictions as required. One way to address the height of equipment that will move during the project is to establish a three-dimensional "box" within which equipment will be confined that can be studied as a single object. Attach drawings to graphically indicate the safety area, OFZ, and OFA boundaries.

3.24 **Other Limitations on Construction.**

This section should describe what limitations must be applied to each area of work and when each limitation will be applied: limitations due to airport operations, height (i.e., crane) restrictions, areas which cannot be worked at simultaneously, day/night work restrictions, winter construction, and other limitations. Include a reference to paragraph 3.7 for project phasing requirements based on construction limitations as required.

Page Intentionally Blank

APPENDIX A. RELATED READING MATERIAL

Obtain the latest version of the following free publications from the FAA on its Web site at http://www.faa.gov/airports/.

Table A-1. FAA Publications

Number	Title and Description
AC 150/5200-28	*Notices to Airmen (NOTAMs) for Airport Operators* Guidance for using the NOTAM System in airport reporting.
AC 150/5200-30	*Airport Field Condition Assessments and Winter Operations Safety* Guidance for airport owners/operators on the development of an acceptable airport snow and ice control program and on appropriate field condition reporting procedures.
AC 150/5200-33	*Hazardous Wildlife Attractants On or Near Airports* Guidance on locating certain land uses that might attract hazardous wildlife to public-use airports.
AC 150/5210-5	*Painting, Marking, and Lighting of Vehicles Used on an Airport* Guidance, specifications, and standards for painting, marking, and lighting vehicles operating in the airport air operations areas.
AC 150/5210-20	*Ground Vehicle Operations to include Taxiing or Towing an Aircraft on Airports* Guidance to airport operators on developing ground vehicle operation training programs.
AC 150/5300-13	*Airport Design* FAA standards and recommendations for airport design. Establishes approach visibility minimums as an airport design parameter, and contains the Object Free area and the obstacle free-zone criteria.
AC 150/5210-24	*Airport Foreign Object Debris (FOD) Management* Guidance for developing and managing an airport foreign object debris (FOD) program

Number	Title and Description
AC 150/5320-15	*Management of Airport Industrial Waste* Basic information on the characteristics, management, and regulations of industrial wastes generated at airports. Guidance for developing a Storm Water Pollution Prevention Plan (SWPPP) that applies best management practices to eliminate, prevent, or reduce pollutants in storm water runoff with particular airport industrial activities.
AC 150/5340-1	*Standards for Airport Markings* FAA standards for the siting and installation of signs on airport runways and taxiways.
AC 150/5340-18	*Standards for Airport Sign Systems* FAA standards for the siting and installation of signs on airport runways and taxiways.
AC 150/5345-28	*Precision Approach Path Indicator (PAPI) Systems* FAA standards for PAPI systems, which provide pilots with visual glide slope guidance during approach for landing.
AC 150/5340-30	*Design and Installation Details for Airport Visual Aids* Guidance and recommendations on the installation of airport visual aids.
AC 150/5345-39	*Specification for L-853, Runway and Taxiway Retroreflective Markers*
AC 150/5345-44	*Specification for Runway and Taxiway Signs* FAA specifications for unlighted and lighted signs for taxiways and runways.
AC 150/5345-53	*Airport Lighting Equipment Certification Program* Details on the Airport Lighting Equipment Certification Program (ALECP).
AC 150/5345-50	*Specification for Portable Runway and Taxiway Lights* FAA standards for portable runway and taxiway lights and runway end identifier lights for temporary use to permit continued aircraft operations while all or part of a runway lighting system is inoperative.
AC 150/5345-55	*Specification for L-893, Lighted Visual Aid to Indicate Temporary Runway Closure*

Number	Title and Description
AC 150/5370-10	*Standards for Specifying Construction of Airports* Standards for construction of airports, including earthwork, drainage, paving, turfing, lighting, and incidental construction.
AC 150/5370-12	*Quality Management for Federally Funded Airport Construction Projects*
EB 93	*Guidance for the Assembly and Installation of Temporary Orange Construction Signs*
FAA Order 5200.11	FAA Airports (ARP) Safety Management System (SMS) Basics for implementing SMS within ARP. Includes roles and responsibilities of ARP management and staff as well as other FAA lines of business that contribute to the ARP SMS.
FAA Certalert 98-05	*Grasses Attractive to Hazardous Wildlife* Guidance on grass management and seed selection.
FAA Form 7460-1	Notice of Proposed Construction or Alteration
FAA Form 7480-1	Notice of Landing Area Proposal
FAA Form 6000.26	National NAS Strategic Interruption Service Level Agreement, Strategic Events Coordination, Airport Sponsor Form

Obtain the latest version of the following free publications from the Electronic Code of Federal Regulations at http://www.ecfr.gov/.

Table A-2. Code of Federal Regulation

Number	Title
Title 14 CFR Part 77	Safe, Efficient Use and Preservation of the Navigable Airspace
Title 14 CFR Part 139	Certification of Airports
Title 49 CFR Part 1542	Airport Security

Obtain the latest version of the Manual on Uniform Traffic Control Devices from the Federal Highway Administration at http://mutcd.fhwa.dot.gov/.

Page Intentionally Blank

APPENDIX B. TERMS AND ACRONYMS

Table B-1. Terms and Acronyms

Term	Definition
Form 7460-1	Notice of Proposed Construction or Alteration. For on-airport projects, the form submitted to the FAA regional or airports division office as formal written notification of any kind of construction or alteration of objects that affect navigable airspace, as defined in 14 CFR Part 77, *Safe, Efficient Use, and Preservation of the Navigable Airspace*. (See guidance available on the FAA web site at https://oeaaa.faa.gov.) The form may be downloaded at http://www.faa.gov/airports/resources/forms/, or filed electronically at: https://oeaaa.faa.gov.
Form 7480-1	Notice of Landing Area Proposal. Form submitted to the FAA Airports Regional Division Office or Airports District Office as formal written notification whenever a project without an airport layout plan on file with the FAA involves the construction of a new airport; the construction, realigning, altering, activating, or abandoning of a runway, landing strip, or associated taxiway; or the deactivation or abandoning of an entire airport The form may be downloaded at http://www.faa.gov/airports/resources/forms/.
Form 6000-26	Airport Sponsor Strategic Event Submission Form
AC	Advisory Circular
ACSI	Airport Certification Safety Inspector
ADG	Airplane Design Group
AIP	Airport Improvement Program
ALECP	Airport Lighting Equipment Certification Program
ANG	Air National Guard
AOA	Air Operations Area, as defined in 14 CFR Part 107. Means a portion of an airport, specified in the airport security program, in which security measures are carried out. This area includes aircraft movement areas, aircraft parking areas, loading ramps, and safety areas, and any adjacent areas (such as general aviation areas) that are not separated by adequate security systems, measures, or procedures. This area does not include the secured area of the airport terminal building.
ARFF	Aircraft Rescue and Fire Fighting
ARP	FAA Office of Airports
ASDA	Accelerate-Stop Distance Available
AT	Air Traffic
ATCT	Airport Traffic Control Tower
ATIS	Automatic Terminal Information Service
ATO	Air Traffic Organization
Certificated Airport	An airport that has been issued an Airport Operating Certificate by the FAA under

Term	Definition
	the authority of 14 CFR Part 139, *Certification of Airports*.
CFR	Code of Federal Regulations
Construction	The presence of construction-related personnel, equipment, and materials in any location that could infringe upon the movement of aircraft.
CSPP	Construction Safety and Phasing Plan. The overall plan for safety and phasing of a construction project developed by the airport operator, or developed by the airport operator's consultant and approved by the airport operator. It is included in the invitation for bids and becomes part of the project specifications.
CTAF	Common Traffic Advisory Frequency
Displaced Threshold	A threshold that is located at a point on the runway other than the designated beginning of the runway. The portion of pavement behind a displaced threshold is available for takeoffs in either direction or landing from the opposite direction.
DOT	Department of Transportation
EPA	Environmental Protection Agency
FAA	Federal Aviation Administration
FOD	Foreign Object Debris/Damage
FSS	Flight Service Station
GA	General Aviation
HAZMAT	Hazardous Materials
HMA	Hot Mix Asphalt
IAP	Instrument Approach Procedures
IFR	Instrument Flight Rules
ILS	Instrument Landing System
LDA	Landing Distance Available
LOC	Localizer antenna array
Movement Area	The runways, taxiways, and other areas of an airport that are used for taxiing or hover taxiing, air taxiing, takeoff, and landing of aircraft, exclusive of loading aprons and aircraft parking areas (reference 14 CFR Part 139).
MSDS	Material Safety Data Sheet
MUTCD	Manual on Uniform Traffic Control Devices
NAVAID	Navigation Aid
NAVAID Critical Area	An area of defined shape and size associated with a NAVAID that must remain clear and graded to avoid interference with the electronic signal.
Non-Movement Area	The area inside the airport security fence exclusive of the Movement Area. It is important to note that the non-movement area includes pavement traversed by aircraft.

Term	Definition
NOTAM	Notices to Airmen
Obstruction	Any object/obstacle exceeding the obstruction standards specified by 14 CFR Part 77, subpart C.
OCC	Operations Control Center
OE / AAA	Obstruction Evaluation / Airport Airspace Analysis
OFA	Object Free Area. An area on the ground centered on the runway, taxiway, or taxi lane centerline provided to enhance safety of aircraft operations by having the area free of objects except for those objects that need to be located in the OFA for air navigation or aircraft ground maneuvering purposes. (See AC 150/5300-13 for additional guidance on OFA standards and wingtip clearance criteria.)
OFZ	Obstacle Free Zone. The airspace below 150 ft (45 m) above the established airport elevation and along the runway and extended runway centerline that is required to be clear of all objects, except for frangible visual NAVAIDs that need to be located in the OFZ because of their function, in order to provide clearance protection for aircraft landing or taking off from the runway and for missed approaches. The OFZ is subdivided as follows: Runway OFZ, Inner Approach OFZ, Inner Transitional OFZ, and Precision OFZ. Refer to AC 150/5300-13 for guidance on OFZ.
OSHA	Occupational Safety and Health Administration
OTS	Out of Service
P&R	Planning and Requirements Group
NPI	NAS Planning & Integration
PAPI	Precision Approach Path Indicator
PFC	Passenger Facility Charge
PLASI	Pulse Light Approach Slope Indicator
Project Proposal Summary	A clear and concise description of the proposed project or change that is the object of Safety Risk Management.
RA	Reimbursable Agreement
RE	Resident Engineer
REIL	Runway End Identifier Lights
RNAV	Area Navigation
ROFA	Runway Object Free Area
RSA	Runway Safety Area. A defined surface surrounding the runway prepared or suitable for reducing the risk of damage to airplanes in the event of an undershoot, overshoot, or excursion from the runway, in accordance with AC 150/5300-13.
SDS	Safety Data Sheet
SIDA	Security Identification Display Area
SMS	Safety Management System

Term	Definition
SPCD	Safety Plan Compliance Document. Details developed and submitted by a contractor to the airport operator for approval providing details on how the performance of a construction project will comply with the CSPP.
SRM	Safety Risk Management
SSC	System Support Center
Taxiway Safety Area	A defined surface alongside the taxiway prepared or suitable for reducing the risk of damage to an airplane unintentionally departing the taxiway, in accordance with AC 150/5300-13.
TDG	Taxiway Design Group
Temporary	Any condition that is not intended to be permanent.
Temporary Runway End	The beginning of that portion of the runway available for landing and taking off in one direction, and for landing in the other direction. Note the difference from a displaced threshold.
Threshold	The beginning of that portion of the runway available for landing. In some instances, the landing threshold may be displaced.
TODA	Takeoff Distance Available
TOFA	Taxiway Object Free Area
TORA	Takeoff Run Available. The length of the runway less any length of runway unavailable and/or unsuitable for takeoff run computations. See AC 150/5300-13 for guidance on declared distances.
TSA	Taxiway Safety Area, or Transportation Security Administration
UNICOM	A radio communications system of a type used at small airports.
VASI	Visual Approach Slope Indicator
VGSI	Visual Glide Slope Indicator. A device that provides a visual glide slope indicator to landing pilots. These systems include precision approach path indicator (PAPI), visual approach slope indicator (VASI), and pulse light approach slope indicator (PLASI).
VFR	Visual Flight Rules
VOR	Very High Frequency Omnidirectional Radio Range
VPD	Vehicle / Pedestrian Deviation

APPENDIX C. SAFETY AND PHASING PLAN CHECKLIST

This appendix is keyed to Chapter 2. In the electronic version of this AC, clicking on the paragraph designation in the Reference column will access the applicable paragraph. There may be instances where the CSPP requires provisions that are not covered by the list in this appendix.

This checklist is intended as an aid, not a required submittal.

Table C-1. CSPP Checklist

Coordination	Reference	Addressed?			Remarks
		Yes	No	NA	
General Considerations					
Requirements for predesign, prebid, and preconstruction conferences to introduce the subject of airport operational safety during construction are specified.	2.5				
Operational safety is a standing agenda item for construction progress meetings.	2.5				
Scheduling of the construction phases is properly addressed.	2.6				
Any formal agreements are established.	2.5.3				
Areas and Operations Affected by Construction Activity					
Drawings showing affected areas are included.	2.7.1				
Closed or partially closed runways, taxiways, and aprons are depicted on drawings.	2.7.1.1				
Access routes used by ARFF vehicles affected by the project are addressed.	2.7.1.2				
Access routes used by airport and airline support vehicles affected by the project are addressed.	2.7.1.3				
Underground utilities, including water supplies for firefighting and drainage.	2.7.1.4				

Coordination	Reference	Addressed?			Remarks
		Yes	No	NA	
Approach/departure surfaces affected by heights of temporary objects are addressed.	2.7.1.5				
Construction areas, storage areas, and access routes near runways, taxiways, aprons, or helipads are properly depicted on drawings.	2.7.1				
Temporary changes to taxi operations are addressed.	2.7.2.1				
Detours for ARFF and other airport vehicles are identified.	2.7.2.2				
Maintenance of essential utilities and underground infrastructure is addressed.	2.7.2.3				
Temporary changes to air traffic control procedures are addressed.	2.7.2.4				
NAVAIDs					
Critical areas for NAVAIDs are depicted on drawings.	2.8				
Effects of construction activity on the performance of NAVAIDS, including unanticipated power outages, are addressed.	2.8				
Protection of NAVAID facilities is addressed.	2.8				
The required distance and direction from each NAVAID to any construction activity is depicted on drawings.	2.8				
Procedures for coordination with FAA ATO/Technical Operations, including identification of points of contact, are included.	2.8, 2.13.1, 2.13.5.3.1, 2.18.1				
Contractor Access					
The CSPP addresses areas to which contractor will have access and how	2.9				

Coordination	Reference	Addressed?			Remarks
		Yes	No	NA	
the areas will be accessed.					
The application of 49 CFR Part 1542 Airport Security, where appropriate, is addressed.	2.9				
The location of stockpiled construction materials is depicted on drawings.	2.9.1				
The requirement for stockpiles in the ROFA to be approved by FAA is included.	2.9.1				
Requirements for proper stockpiling of materials are included.	2.9.1				
Construction site parking is addressed.	2.9.2.1				
Construction equipment parking is addressed.	2.9.2.2				
Access and haul roads are addressed.	2.9.2.3				
A requirement for marking and lighting of vehicles to comply with AC 150/5210-5, *Painting, Marking and Lighting of Vehicles Used on an Airport,* is included.	2.9.2.4				
Proper vehicle operations, including requirements for escorts, are described.	2.9.2.5, 2.9.2.6				
Training requirements for vehicle drivers are addressed.	2.9.2.7				
Two-way radio communications procedures are described.	2.9.2.9				
Maintenance of the secured area of the airport is addressed.	2.9.2.10				
Wildlife Management					
The airport operator’s wildlife management procedures are addressed.	2.10				

Coordination	Reference	Addressed?			Remarks
		Yes	No	NA	
Foreign Object Debris Management					
The airport operator's FOD management procedures are addressed.	2.11				
Hazardous Materials Management					
The airport operator's hazardous materials management procedures are addressed.	2.12				
Notification of Construction Activities					
Procedures for the immediate notification of airport user and local FAA of any conditions adversely affecting the operational safety of the airport are detailed.	2.13				
Maintenance of a list by the airport operator of the responsible representatives/points of contact for all involved parties and procedures for contacting them 24 hours a day, seven days a week is specified.	2.13.1				
A list of local ATO/Technical Operations personnel is included.	2.13.1				
A list of ATCT managers on duty is included.	2.13.1				
A list of authorized representatives to the OCC is included.	2.13.2				
Procedures for coordinating, issuing, maintaining and cancelling by the airport operator of NOTAMS about airport conditions resulting from construction are included.	2.8, 2.13.2, 2.18.3.3.9				
Provision of information on closed or hazardous conditions on airport movement areas by the airport operator to the OCC is specified.	2.13.2				
Emergency notification procedures for medical, fire fighting, and police	2.13.3				

Coordination	Reference	Addressed?			Remarks
		Yes	No	NA	
response are addressed.					
Coordination with ARFF personnel for non-emergency issues is addressed.	2.13.4				
Notification to the FAA under 14 CFR parts 77 and 157 is addressed.	2.13.5				
Reimbursable agreements for flight checks and/or design and construction for FAA owned NAVAIDs are addressed.	2.13.5.3.2				
Inspection Requirements					
Daily and interim inspections by both the airport operator and contractor are specified.	2.14.1, 2.14.2				
Final inspections at certificated airports are specified when required.	2.14.3				
Underground Utilities					
Procedures for protecting existing underground facilities in excavation areas are described.	2.15				
Penalties					
Penalty provisions for noncompliance with airport rules and regulations and the safety plans are detailed.	2.16				
Special Conditions					
Any special conditions that affect the operation of the airport or require the activation of any special procedures are addressed.	2.17				
Runway and Taxiway Visual Aids - Marking, Lighting, Signs, and Visual NAVAIDs					
The proper securing of temporary airport markings, lighting, signs, and visual NAVAIDs is addressed.	2.18.1				
Frangibility of airport markings, lighting, signs, and visual NAVAIDs is specified.	2.18.1, 2.18.3, 2.18.4.2, 2.20.2.4				

Coordination	Reference	Addressed?			Remarks
		Yes	No	NA	
The requirement for markings to be in compliance with AC 150/5340-1, *Standards for Airport Markings*, is specified.	2.18.2				
Detailed specifications for materials and methods for temporary markings are provided.	2.18.2				
The requirement for lighting to conform to AC 150/5340-30, *Design and Installation Details for Airport Visual Aids;* AC 150/5345-50, *Specification for Portable Runway and Taxiway Lights;* and AC 150/5345-53, *Airport Lighting Certification Program*, is specified.	2.18.3				
The use of a lighted X is specified where appropriate.	2.18.2.1.2, 2.18.3.2				
The requirement for signs to conform to AC 150/5345-44, *Specification for Runway and Taxiway Signs;* AC 50/5340-18, *Standards for Airport Sign Systems;* and AC 150/5345-53, *Airport Lighting Certification Program*, is specified.	2.18.4				
Marking and Signs For Access Routes					
The CSPP specifies that pavement markings and signs intended for construction personnel should conform to AC 150/5340-18 and, to the extent practicable, with the MUTCD and/or State highway specifications.	2.18.4.2				
Hazard Marking and Lighting					
Prominent, comprehensible warning indicators for any area affected by construction that is normally accessible to aircraft, personnel, or vehicles are specified.	2.20.1				

Coordination	Reference	Addressed?			Remarks
		Yes	No	NA	
Hazard marking and lighting are specified to identify open manholes, small areas under repair, stockpiled material, and waste areas.	2.20.1				
The CSPP considers less obvious construction-related hazards.	2.20.1				
Equipment that poses the least danger to aircraft but is sturdy enough to remain in place when subjected to typical winds, prop wash and jet blast is specified.	2.20.2.1				
The spacing of barricades is specified such that a breach is physically prevented barring a deliberate act.	2.20.2.1				
Red lights meeting the luminance requirements of the State Highway Department are specified.	2.20.2.2				
Barricades, temporary markers, and other objects placed and left in areas adjacent to any open runway, taxiway, taxi lane, or apron are specified to be as low as possible to the ground, and no more than 18 inch high.	2.20.2.3				
Barricades are specified to indicate construction locations in which no part of an aircraft may enter.	2.20.2.3				
Highly reflective barriers with lights are specified to barricade taxiways leading to closed runways.	2.20.2.5				
Markings for temporary closures are specified.	2.20.2.5				
The provision of a contractor's representative on call 24 hours a day for emergency maintenance of airport hazard lighting and barricades is specified.	2.20.2.7				

Coordination	Reference	Addressed?			Remarks
		Yes	No	NA	
Work Zone Lighting for Nighttime Construction					
If work is to be conducted at night, the CSPP identifies construction lighting units and their general locations and aiming in relationship to the ATCT and active runways and taxiways.	2.21				
Protection of Runway and Taxiway Safety Areas					
The CSPP clearly states that no construction may occur within a safety area while the associated runway or taxiway is open for aircraft operations.	2.22.1.1, 2.22.3.1				
The CSPP specifies that the airport operator coordinates the adjustment of RSA or TSA dimensions with the ATCT and the appropriate FAA Airports Regional or District Office and issues a local NOTAM.	2.22.1.2, 2.22.3.2				
Procedures for ensuring adequate distance for protection from blasting operations, if required by operational considerations, are detailed.	2.22.3.3				
The CSPP specifies that open trenches or excavations are not permitted within a safety area while the associated runway or taxiway is open, subject to approved exceptions.	2.22.1.4				
Appropriate covering of excavations in the RSA or TSA that cannot be backfilled before the associated runway or taxiway is open is detailed.	2.22.1.4				
The CSPP includes provisions for prominent marking of open trenches and excavations at the construction site.	2.22.1.4				
Grading and soil erosion control to maintain RSA/TSA standards are	2.22.3.5				

Coordination	Reference	Addressed?			Remarks
		Yes	No	NA	
addressed.					
The CSPP specifies that equipment is to be removed from the ROFA when not in use.	2.22.2				
The CSPP clearly states that no construction may occur within a taxiway safety area while the taxiway is open for aircraft operations.	2.22.3				
Appropriate details are specified for any construction work to be accomplished in a taxiway object free area.	2.22.4				
Measures to ensure that personnel, material, and/or equipment do not penetrate the OFZ or threshold siting surfaces while the runway is open for aircraft operations are included.	2.22.4.3.6				
Provisions for protection of runway approach/departure areas and clearways are included.	2.22.6				
Other Limitations on Construction					
The CSPP prohibits the use of open flame welding or torches unless adequate fire safety precautions are provided and the airport operator has approved their use.	2.23.1.2				
The CSPP prohibits the use of electrical blasting caps on or within 1,000 ft (300 m) of the airport property.	2.23.1.3				

APPENDIX D. CONSTRUCTION PROJECT DAILY SAFETY INSPECTION CHECKLIST

The situations identified below are potentially hazardous conditions that may occur during airport construction projects. Safety area encroachments, unauthorized and improper ground vehicle operations, and unmarked or uncovered holes and trenches near aircraft operating surfaces pose the most prevalent threats to airport operational safety during airport construction projects. The list below is one tool that the airport operator or contractor may use to aid in identifying and correcting potentially hazardous conditions. It should be customized as appropriate for each project including information such as the date, time and name of the person conducting the inspection.

Table D-1. Potentially Hazardous Conditions

Item	Action Required (Describe)	No Action Required (Check)
Excavation adjacent to runways, taxiways, and aprons improperly backfilled.		
Mounds of earth, construction materials, temporary structures, and other obstacles near any open runway, taxiway, or taxi lane; in the related Object Free area and aircraft approach or departure areas/zones; or obstructing any sign or marking.		
Runway resurfacing projects resulting in lips exceeding 3 inch (7.6 cm) from pavement edges and ends.		
Heavy equipment (stationary or mobile) operating or idle near AOA, in runway approaches and departures areas, or in OFZ.		
Equipment or material near NAVAIDs that may degrade or impair radiated signals and/or the monitoring of navigation and visual aids. Unauthorized or improper vehicle operations in localizer or glide slope critical areas, resulting in electronic interference and/or facility shutdown.		
Tall and especially relatively low visibility units (that is, equipment with slim profiles) — cranes, drills, and similar objects — located in critical areas, such as OFZ and		

Item	Action Required (Describe)	No Action Required (Check)
approach zones.		
Improperly positioned or malfunctioning lights or unlighted airport hazards, such as holes or excavations, on any apron, open taxiway, or open taxi lane or in a related safety, approach, or departure area.		
Obstacles, loose pavement, trash, and other debris on or near AOA. Construction debris (gravel, sand, mud, paving materials) on airport pavements may result in aircraft propeller, turbine engine, or tire damage. Also, loose materials may blow about, potentially causing personal injury or equipment damage.		
Inappropriate or poorly maintained fencing during construction intended to deter human and animal intrusions into the AOA. Fencing and other markings that are inadequate to separate construction areas from open AOA create aviation hazards.		
Improper or inadequate marking or lighting of runways (especially thresholds that have been displaced or runways that have been closed) and taxiways that could cause pilot confusion and provide a potential for a runway incursion. Inadequate or improper methods of marking, barricading, and lighting of temporarily closed portions of AOA create aviation hazards.		
Wildlife attractants — such as trash (food scraps not collected from construction personnel activity), grass seeds, tall grass, or standing water — on or near airports.		
Obliterated or faded temporary markings on active operational areas.		
Misleading or malfunctioning obstruction lights. Unlighted or unmarked obstructions in the approach to any open runway pose aviation hazards.		

Item	Action Required (Describe)	No Action Required (Check)
Failure to issue, update, or cancel NOTAMs about airport or runway closures or other construction related airport conditions.		
Failure to mark and identify utilities or power cables. Damage to utilities and power cables during construction activity can result in the loss of runway / taxiway lighting; loss of navigation, visual, or approach aids; disruption of weather reporting services; and/or loss of communications.		
Restrictions on ARFF access from fire stations to the runway / taxiway system or airport buildings.		
Lack of radio communications with construction vehicles in airport movement areas.		
Objects, regardless of whether they are marked or flagged, or activities anywhere on or near an airport that could be distracting, confusing, or alarming to pilots during aircraft operations.		
Water, snow, dirt, debris, or other contaminants that temporarily obscure or derogate the visibility of runway/taxiway marking, lighting, and pavement edges. Any condition or factor that obscures or diminishes the visibility of areas under construction.		
Spillage from vehicles (gasoline, diesel fuel, oil) on active pavement areas, such as runways, taxiways, aprons, and airport roadways.		
Failure to maintain drainage system integrity during construction (for example, no temporary drainage provided when working on a drainage system).		

Item	Action Required (Describe)	No Action Required (Check)
Failure to provide for proper electrical lockout and tagging procedures. At larger airports with multiple maintenance shifts/workers, construction contractors should make provisions for coordinating work on circuits.		
Failure to control dust. Consider limiting the amount of area from which the contractor is allowed to strip turf.		
Exposed wiring that creates an electrocution or fire ignition hazard. Identify and secure wiring, and place it in conduit or bury it.		
Site burning, which can cause possible obscuration.		
Construction work taking place outside of designated work areas and out of phase.		

APPENDIX E. SAMPLE OPERATIONAL EFFECTS TABLE

E.1 **Project Description.**

Runway 15-33 is currently 7820 feet long, with a 500 foot stopway on the north end. This project will remove the stopway and extend the runway 1000 feet to the north and 500 feet to the south. Finally, the existing portion of the runway will be repaved. The runway 33 glide slope will be relocated. The new runway 33 localizer has already been installed by FAA Technical Operations and only needs to be switched on. Runway 15 is currently served only by a localizer, which will remain in operation as it will be beyond the future RSA. Appropriate NOTAMS will be issued throughout the project.

E.1.1 During Phase I, the runway 15 threshold will be displaced 1000 feet to keep construction equipment below the approach surface. The start of runway 15 takeoff and the departure end of runway 33 will also be moved 500 feet to protect workers from jet blast. Declared distances for runway 33 will be adjusted to provide the required RSA and applicable departure surface. Excavation near Taxiway G will require its ADG to be reduced from IV to III. See Figure E-1.

Figure E-1. Phase I Example

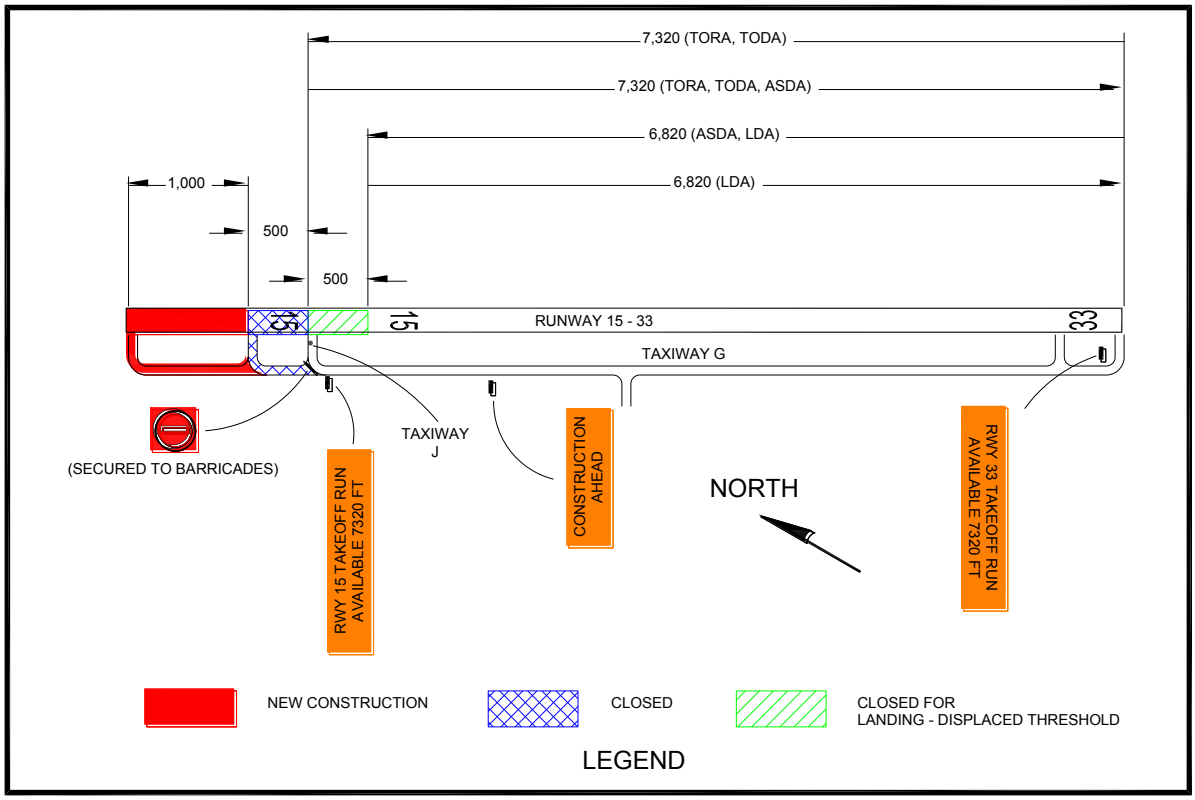

Note 1: Where hold signs are installed on both sides of a taxiway, install the TORA sign on the left side of the taxiway before the final turn to the runway intersection.

Note 2: Based on the declared distances for Runway 33 departures, the maximum equipment height in the construction area is 12.5 feet (500/40 = 12.5).

E.2 During Phase II, the runway 33 threshold will be displaced 1000 feet to keep construction equipment below the approach surface. The start of runway 33 takeoff and the departure end of runway 15 will also be moved 500 feet to protect workers from jet blast. Declared distances for runway 15 will be adjusted to provide the required RSA and applicable departure surface. See Figure E-2.

Figure E-2. Phase II Example

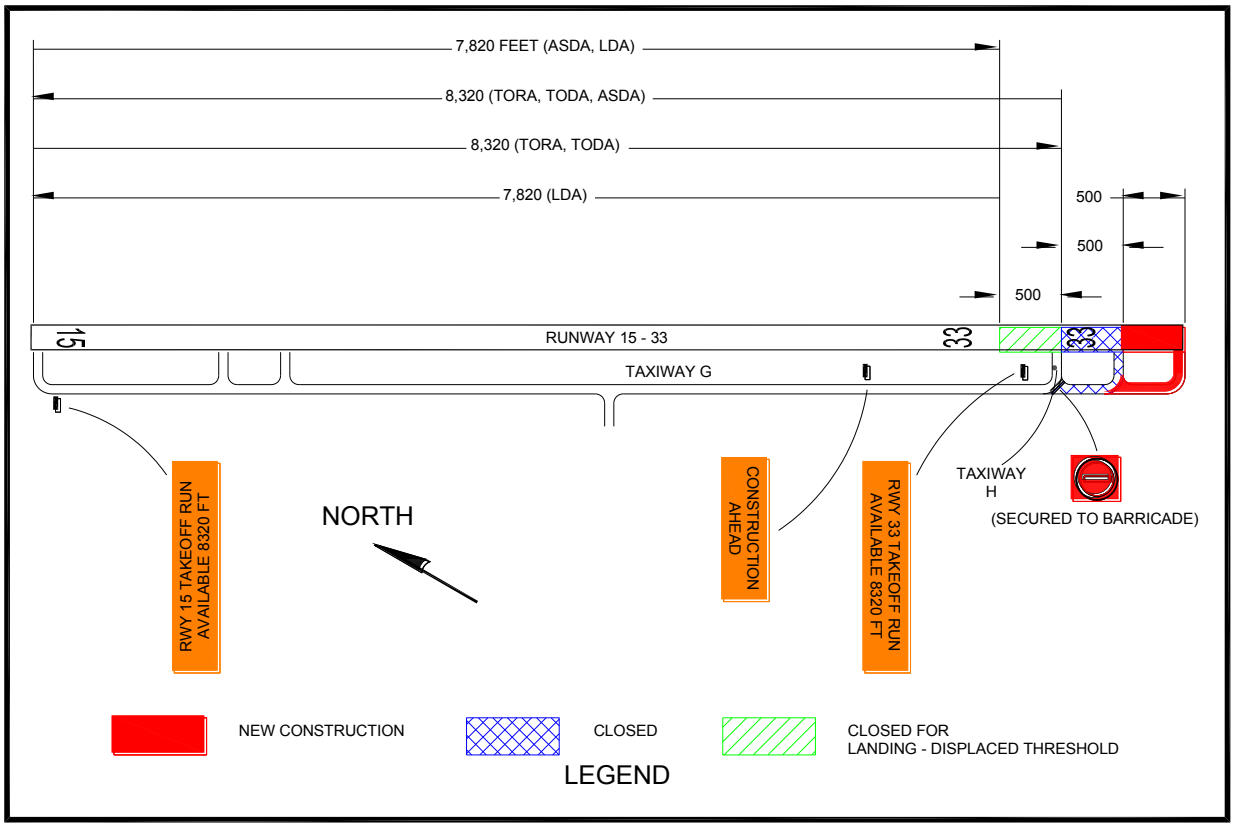

Note 1: Where hold signs are installed on both sides of a taxiway, install the TORA sign on the left side of the taxiway before the final turn to the runway intersection.

Note 2: Based on the declared distances for Runway 15 departures, the maximum equipment height in the construction area is 12.5 feet (500/40 = 12.5).

E.3 During Phase III, the existing portion of the runway will be repaved with Hot Mix Asphalt (HMA) and the runway 33 glide slope will be relocated. Construction will be accomplished between the hours of 8:00 pm and 5:00 am, during which the runway will be closed to operations.

Figure E-3. Phase III Example

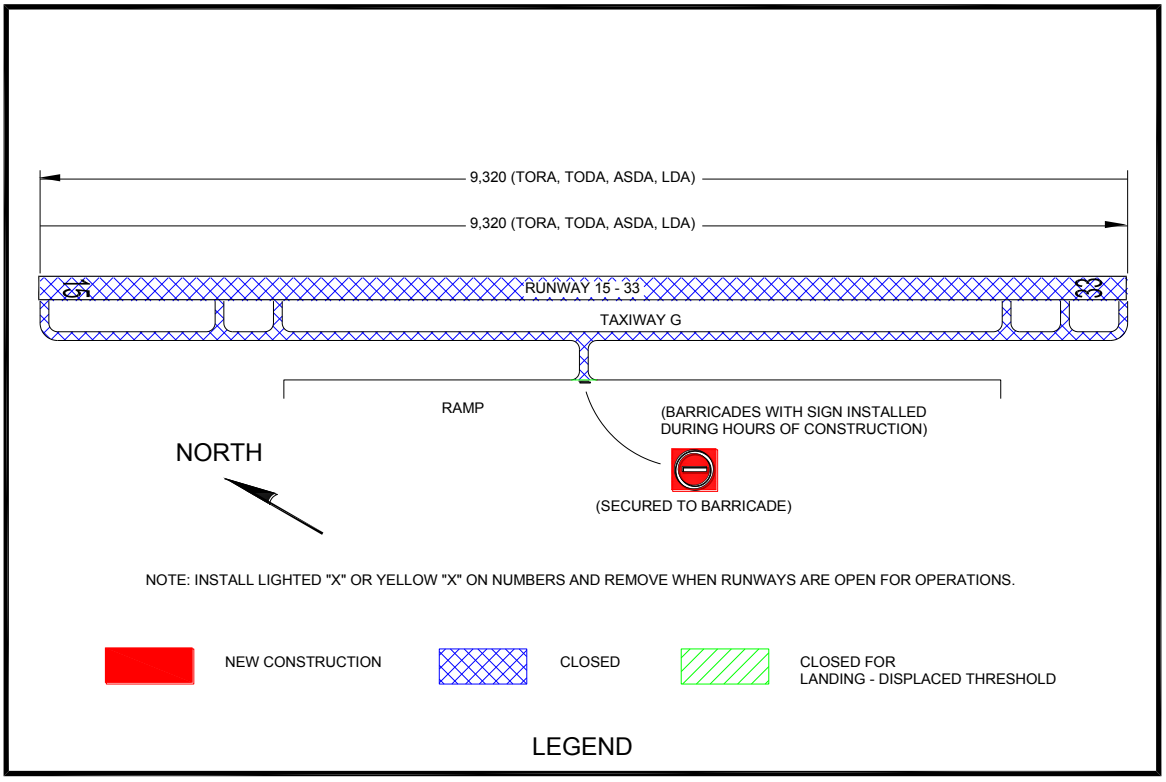

Table E-1. Operational Effects Table

Project	**Runway 15-33 Extension and Repaving**			
Phase	**Normal (Existing)**	**Phase I: Extend Runway 15 End**	**Phase II: Extend Runway 33 End**	**Phase III: Repave Runway**
Scope of Work	N/A	Extend Runway 15-33 1,000 ft on north end with Hot Mix Asphaltic Concrete (HMA).	Extend Runway 15-33 500 ft on south end with Hot Mix Asphaltic Concrete (HMA).	Repave existing runway with HMA Relocate Runway 33 Glide Slope
Effects of Construction Operations	N/A	Existing North 500 ft closed	Existing South 500 ft closed	Runway closed between 8:00 pm and 5:00 am Edge lighting out of service
Construction Phase	N/A	Phase I (Anticipated)	Phase II (Anticipated)	Phase III (Anticipated)
Runway 15 Average Aircraft Operations	Carrier: 52 /day GA: 26 /day Military: 11 /day	Carrier: 40 /day GA: 26 /day Military: 0 /day	Carrier: 45 /day GA: 26 /day Military: 5 /day	Carrier: 45 / day GA: 20 / day Military: 0 /day
Runway 33 Average Aircraft Operations	Carrier: 40 /day GA: 18 /day Military: 10 /day	Carrier: 30 /day GA: 18 /day Military: 0 /day	Carrier: 25 /day GA: 18 /day Military: 5 /day	Carrier: 20 /day GA: 5 /day Military: 0 /day
Runway 15-33 Aircraft Category	C-IV	C-IV	C-IV	C-IV
Runway 15 Approach Visibility Minimums	1 mile	1 mile	1 mile	1 mile
Runway 33 Approach Visibility Minimums	¾ mile	¾ mile	¾ mile	1 mile

Note: Proper coordination with Flight Procedures group is necessary to maintain instrument approach procedures during construction.

Project		Runway 15-33 Extension and Repaving			
Phase		Normal (Existing)	Phase I: Extend Runway 15 End	Phase II: Extend Runway 33 End	Phase III: Repave Runway
Runway 15 Declared Distances	TORA	7,820	7,320	8,320	9,320
	TODA	7,820	7,320	8,320	9,320
	ASDA	7,820	7,320	7,820	9,320
	LDA	7,820	6,820	7,820	9,320
Runway 33 Declared Distances	TORA	7,820	7,320	8,320	9,320
	TODA	7,820	7,320	8,320	9,320
	ASDA	8,320	6,820	8,320	9,320
	LDA	7,820	6,820	7,820	9,320
Runway 15 Approach Procedures		LOC only	LOC only	LOC only	LOC only
		RNAV	RNAV	RNAV	RNAV
		VOR	VOR	VOR	VOR
Runway 33 Approach Procedures		ILS	ILS	ILS	LOC only
		RNAV	RNAV	RNAV	RNAV
		VOR	VOR	VOR	VOR
Runway 15 NAVAIDs		LOC	LOC	LOC	LOC
Runway 33 NAVAIDs		ILS, MALSR	ILS, MALSR	ILS, MALSR	LOC, MALSR
Taxiway G ADG		IV	III	IV	IV
Taxiway G TDG		4	4	4	4
ATCT (hours open)		24 hours	24 hours	24 hours	0500 - 2000
ARFF Index		D	D	D	D

Project	Runway 15-33 Extension and Repaving			
Phase	**Normal (Existing)**	**Phase I: Extend Runway 15 End**	**Phase II: Extend Runway 33 End**	**Phase III: Repave Runway**
Special Conditions	Air National Guard (ANG) military operations	All military aircraft relocated to alternate ANG Base	Some large military aircraft relocated to alternate ANG Base	All military aircraft relocated to alternate ANG Base
Information for NOTAMs		Refer above for applicable declared distances. Taxiway G limited to 118 ft wingspan	Refer above for applicable declared distances.	Refer above for applicable declared distances. Airport closed 2000 – 0500. Runway 15 glide slope OTS.

Note: This table is one example. It may be advantageous to develop a separate table for each project phase and/or to address the operational status of the associated NAVAIDs per construction phase.

Complete the following chart for each phase to determine the area that must be protected along the runway and taxiway edges:

Table E-2. Runway and Taxiway Edge Protection

Runway/Taxiway	Aircraft Approach Category* A, B, C, or D	Airplane Design Group* I, II, III, or IV	Safety Area Width in Feet Divided by 2*

*See AC 150/5300-13 to complete the chart for a specific runway/taxiway.

Complete the following chart for each phase to determine the area that must be protected before the runway threshold:

Table E-3. Protection Prior to Runway Threshold

Runway End Number	Airplane Design Group* I, II, III, or IV	Aircraft Approach Category* A, B, C, or D	Minimum Safety Area Prior to the Threshold*	Minimum Distance to Threshold Based on Required Approach Slope*	
			ft	ft	: 1
			ft	ft	: 1
			ft	ft	: 1
			ft	ft	: 1

*See AC 150/5300-13 to complete the chart for a specific runway.

APPENDIX F. ORANGE CONSTRUCTION SIGNS

Figure F-1. Approved Sign Legends

Figure F-2. Orange Construction Sign Example 1

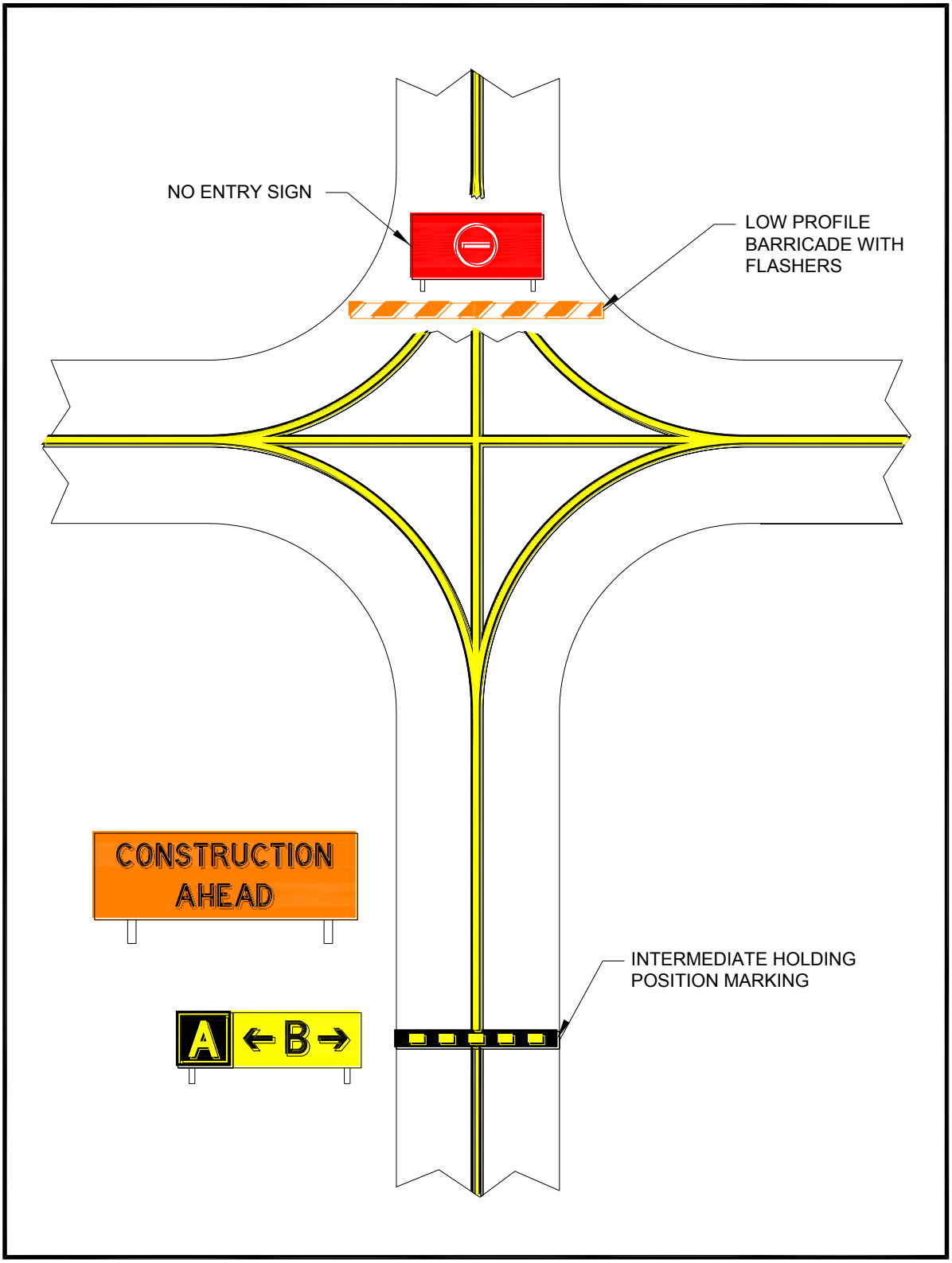

Note: For proper placement of signs, refer to EB 93.

Figure F-3. Orange Construction Sign Example 2

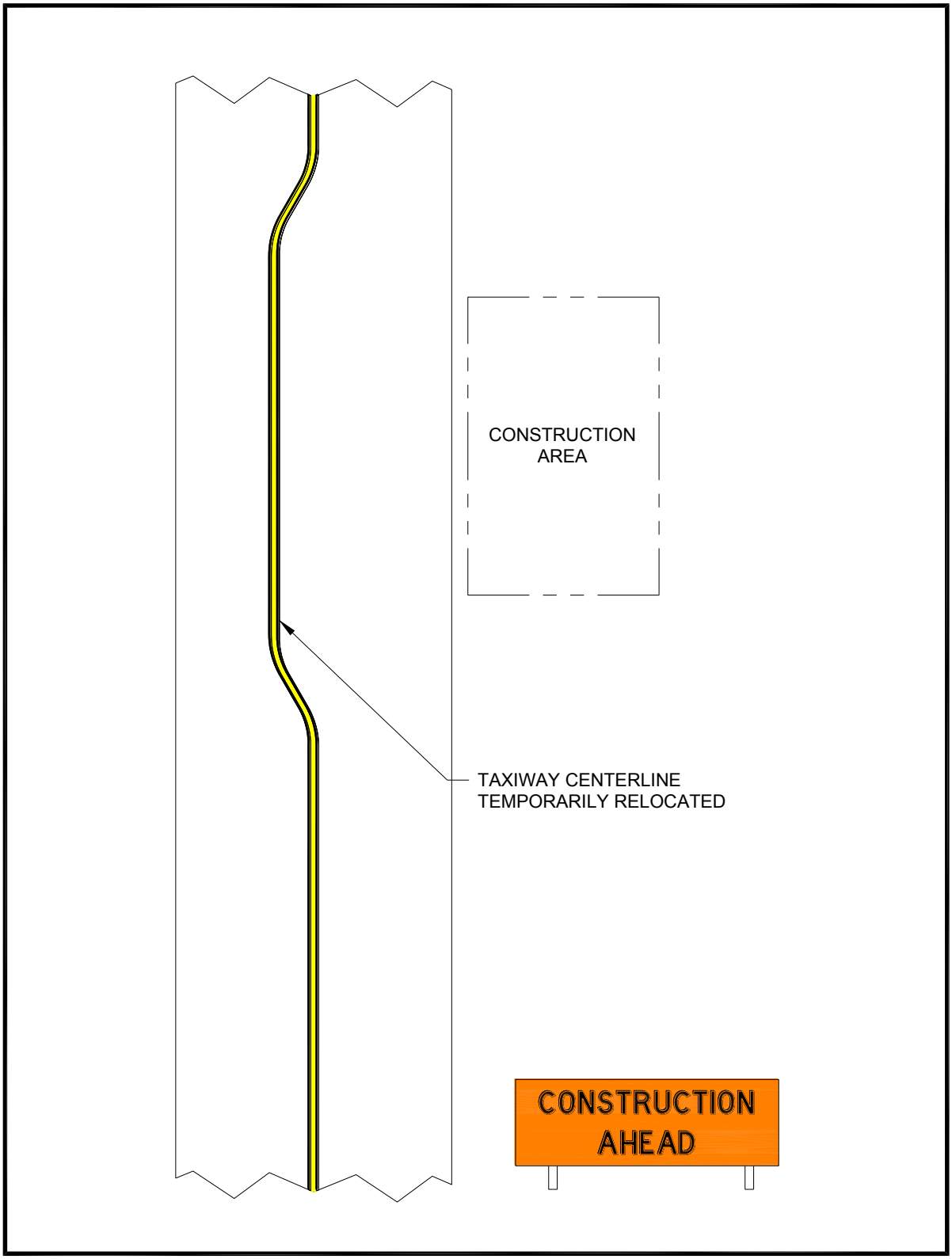

Note: For proper placement of signs, refer to EB 93.

Page Intentionally Blank

Advisory Circular Feedback

If you find an error in this AC, have recommendations for improving it, or have suggestions for new items/subjects to be added, you may let us know by (1) mailing this form to Manager, Airport Engineering Division, Federal Aviation Administration ATTN: AAS-100, 800 Independence Avenue SW, Washington DC 20591 or (2) faxing it to the attention of the Office of Airport Safety and Standards at (202) 267-5383.

Subject: AC 150/5370-2G Date: _____

Please check all appropriate line items:

☐ An error (procedural or typographical) has been noted in paragraph _____ on page _____.

☐ Recommend paragraph _____ on page _____ be changed as follows:

_____
_____
_____

☐ In a future change to this AC, please cover the following subject:
(Briefly describe what you want added.)

_____
_____
_____

☐ Other comments:

_____
_____
_____

☐ I would like to discuss the above. Please contact me at (phone number, email address).

_____

Submitted by: _____ Date: _____

Page Intentionally Blank

APPENDIX B

FAA AC 150/5210-5D

PAINTING, MARKING, AND LIGHTING OF VEHICLES USED ON AIRPORTS

U.S. Department of Transportation

Federal Aviation Administration

Advisory Circular

Subject: Painting, Marking, and Lighting of Vehicles Used on an Airport	**Date:** April 1, 2010	**AC No:** AC 150/5210-5D
	Initiated by: AAS-100	**Change:**

1. PURPOSE. This advisory circular (AC) provides guidance, specifications, and standards for painting, marking, and lighting of vehicles operating in the airport air operations area (AOA). The approved lights, colors, and markings herein assure the conspicuity of vehicles operating in the AOA from both the ground and the air.

2. CANCELLATION. This AC cancels AC 150/5210-5C, Painting, Marking, and Lighting of Vehicles Used on an Airport, dated August 31, 2007.

3. APPLICATION. The Federal Aviation Administration (FAA) recommends the guidelines and standards in this Advisory Circular for vehicles operating in the airport AOA. In general, use of this AC is not mandatory. ***However***, use of this AC is mandatory for vehicles funded with federal grant monies through the Airport Improvement Program (AIP) and/or with revenue from the Passenger Facility Charges (PFC) Program. See Grant Assurance No. 34, "Policies, Standards, and Specifications," and PFC Assurance No. 9, "Standard and Specifications."

Vehicles covered by this AC that do not meet this standard may be used until the vehicle is repainted or replaced, but no later than **December 31, 2010.**

4. PRINCIPAL CHANGES. This AC contains new specifications and recommendations for the painting, marking, and lighting of Towbarless Tow Vehicles (TLTVs).

5. METRIC UNITS. To promote an orderly transition to metric units, this AC includes both English and metric dimensions. The metric conversions may not be exact equivalents, and until there is an official changeover to the metric system, the English dimensions will govern.

6. COMMENTS OR SUGGESTIONS for improvements to this AC should be sent to:

Manager, Airport Engineering Division
Federal Aviation Administration
ATTN: AAS-100
800 Independence Avenue, S.W.
Washington, DC 20591

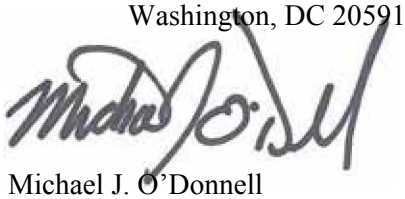

Michael J. O'Donnell
Director of Airport Safety and Standards

Intentionally left blank.

PAINTING, MARKING, AND LIGHTING OF VEHICLES USED ON AN AIRPORT

1. SOURCES OF APPLICABLE DOCUMENTS.

a. American National Standards Institute, Inc. (ANSI), 25 West 43rd St. 4th Floor, New York, NY 10036. Website: **www.ansi.org**

b. American Society for Testing & Materials (ASTM), ASTM International, 100 Barr Harbor Drive, P.O. Box C700, West Conshohocken, PA 19428-2959. Website: **www.astm.org**

c. The National Fire Protection Association (NFPA), 1 Batterymarch Park, Quincy, Massachusetts 02169-7471. Website: **www.nfpa.org**

d. The U. S. General Services Administration (GSA), Centralized Mailing List Services, 501 West Felix Street, Whse 9, South End P.O. Box 6477, Fort Worth, Texas 76115-6477. Website: **www.gsa.gov**

e. The Superintendent of Documents, U.S. Government Printing Office, 732 North Capitol St. NW, Washington, DC 20401.

f. Society of Automotive Engineers, Inc. (SAE), 400 Commonwealth Drive, Warrendale, PA 15096-0001. Website: **www.sae.org**

g. FAA Advisory Circulars: U.S. Department of Transportation, Subsequent Distribution Office, Ardmore East Business Center, 3341 Q 75th Ave., Landover, MD 20785. Website: **www.faa.gov**

h. FAA Engineering Briefs: **www.faa.gov/airports/engineering/engineering_briefs/**

2. DEFINITIONS. The following definitions apply in this AC:

a. **Vehicle –** All conveyances, except aircraft, used on the ground to transport persons, cargo, equipment or those required to perform maintenance, construction, service, and security duties.

b. **Air Operations Area (AOA) –** The portion of airport that encompasses the landing, take off, taxiing, and parking areas for aircraft.

c. **Airport Emergency Vehicles** – Vehicles that are authorized in the AOA for emergency purposes (e.g., ambulances, aircraft rescue and fire fighting (ARFF) vehicles and emergency response vehicles) as authorized by the airport traffic control tower (ATCT) or an authorized on-site accident/incident commander.

d. **Airport Operations Vehicles –** Vehicles routinely used by airport operations personnel for airport inspection and duties associated with airfield operations (such as airfield condition reporting and Incident Command) on the AOA and Movement Area.

e. **Airport Security Vehicles –** Vehicles that are authorized in the AOA for security purposes, as needed (e.g. police cars).

f. Airfield Service Vehicles – Vehicles that are routinely used in the AOA for airfield service, maintenance, or construction (e.g. snow blowers, snowplows, maintenance trucks, and tractors).

g. Aircraft Support Vehicles – Vehicles that are routinely used in the AOA to support aircraft operations (e.g. aircraft pushback tractors, baggage/cargo tractors or trucks, air conditioning and aviation fuel trucks). These vehicles are typically owned by airlines, vendors, or contractors and are not eligible for Federal funding.

h. Reduced Visibility – Prevailing visibility is less than one statute mile (1609 meters) and/or the runway visual range (RVR) is less than 6,000 feet (1830 meters).

i. Movement Area – The runways, taxiways, and other areas of an airport/heliport that are used for taxiing/hover taxiing, air taxiing, takeoff, and landing of aircraft, exclusive of loading ramps and parking areas. At those airports/heliports with an operating airport traffic control tower (ATCT), specific approval for entry onto the movement area must be obtained from air traffic control (ATC).

j. Other Vehicles – Vehicles that are not routinely authorized in the AOA (e.g. construction vehicles). These vehicles are typically owned by airlines, vendors, or contractors and are not eligible for Federal funding.

k. Peak Intensity – Peak intensity, for purposes of this document, means the maximum magnitude of luminescence as measured in candela.

l. Towbarless Tow Vehicle (TLTV) – a type of aircraft support vehicle whose main purpose is to tow aircraft in the AOA by way of nose gear capture.

3. VEHICLE PAINTING.

NOTE: *Airport vehicle paint and markings are a safety of flight requirement. The approved colors/markings herein assure conspicuity of vehicles operating in the AOA from both the ground and air.*

a. Airport Emergency Vehicles.

(1) Ambulances. Ambulance vehicles are painted per the most current version of Federal Specification KKK-A-1822, *Federal Specification for the Star-of-Life Ambulance*. Ambulances are not considered vehicles routinely operating on the AOA.

(2) Aircraft Rescue and Fire Fighting (ARFF) Vehicles. Yellowish-green is the vehicle color standard. Color specifications are per Appendix A.

NOTE: *A yellowish-green color provides optimum visibility during all light levels encountered during a 24-hour day and under variations of light that result from weather and seasonal changes.*

b. Airport Operations Vehicles. Airport operations vehicles may be painted in colors designated by the airport operator. The characteristics must be coordinated with the respective ATCT and identified in the tower letter of agreement.

c. Airport Security Vehicles. Comply with specific state or local requirements.

d. Airfield Service Vehicles. Chrome yellow is the vehicle color standard. Color specifications are per Appendix A. When vehicles are equipped with bumper bars 8 inches (200 mm) or more in depth, the bars must be painted in alternate stripes 4 inches (100 mm) in width of chrome yellow and black inclined 45° to the vertical.

e. Aircraft Support Vehicles.

(1) Any color or combination of colors other than yellowish-green or chrome yellow. The bumper bar paint scheme in paragraph 3.d (of alternating chrome yellow and black stripe) is recommended.

(2) TLTVs. International orange is the vehicle color standard. Retroreflective tape covering more than 25 percent of the vehicle's vertical surfaces may be used as a temporary measure to meet this standard prior to scheduled vehicle painting.

f. Other Vehicles. Any color or combination of colors other than solid black or white.

4. VEHICLE MARKING.

a. Airport Emergency Vehicles.

(1) Ambulances. Ambulances are marked per the most current version of Federal Specification KKK-A-1822.

(2) ARFF Vehicles. Emergency rescue and fire fighting vehicles are marked with the letters "ARFF, "Fire," or "Rescue" and in accordance with 4.c.(1)-(5) of this AC.

b. Airport Operations Vehicles. Airport operations vehicles may be marked as designated by the airport operator. Marking must be coordinated with the respective ATCT and identified in the tower letter of agreement.

c. Airfield Service Vehicles and Aircraft Support Vehicles.

(1) Airport operator owned vehicles must display an identification number on each side and on the roof (the hood should be used if the vehicle has no roof).

(2) Side numbers will be a minimum of 16 inches (410 mm) in height and conspicuously located.

(3) Roof numbers will be a minimum of 24 inches (610 mm) in height and affixed with their bases toward the front of the vehicle. The identification numbers should provide sharp color contrast to the vehicle color.

(4) In addition to the identification numbers, airport operator-owned vehicles must display either the name of the airport and/or the airport insignia.

(5) To further improve night-time recognition of vehicles, a minimum 8 inch (200 mm) wide horizontal band of high gloss white paint or white reflective tape (Retroreflective, ASTM-D 4956-09, *Standard Specification for Retroreflective Sheeting for Traffic Control*, Type III & above) must be used around the vehicle's surface. Figures 1, 2, and 3 show suggested locations for the horizontal reflective band.

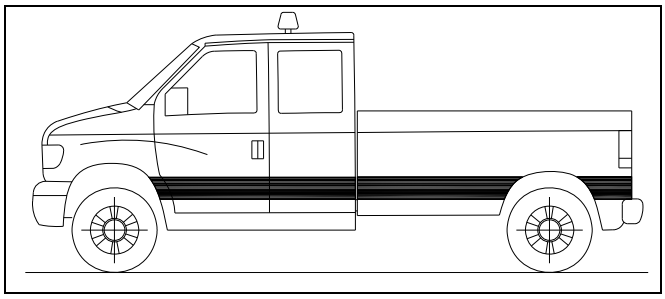

Figure 1: Suggested location for the horizontal reflective band, Option 1

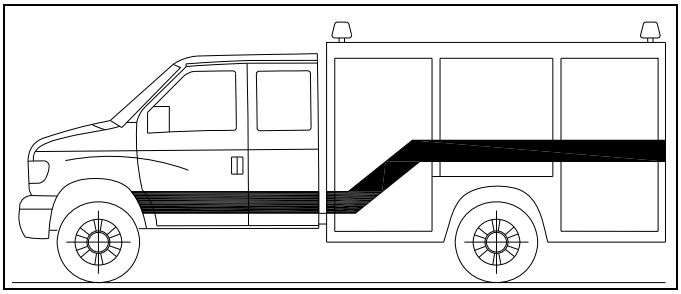

Figure 2: Suggested location for the horizontal reflective band, Option 2

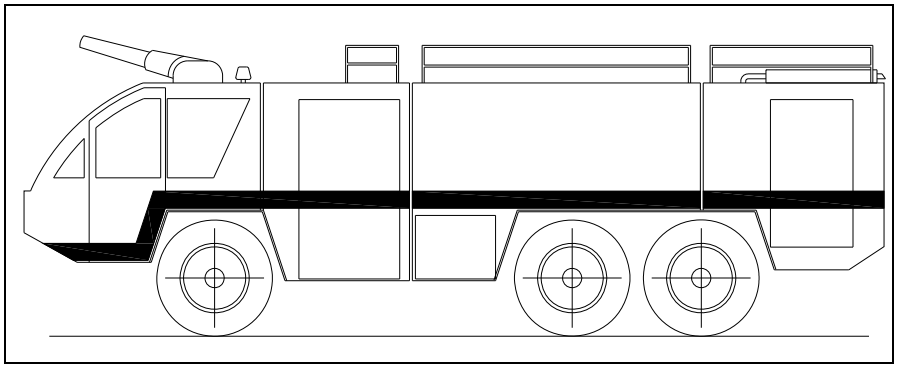

Figure 3: Suggested location for the horizontal reflective band, Option 3

(6) TLTVs. Retroreflective tape is used to outline the shape of a TLTV. If the vertical edge of the vehicle is rounded, the tape should be placed on the rounded portion to reflect light in both the horizontal and vertical planes. Where the placement of the tape may interfere with, or may be worn down by, maintenance or operational activities, tape is not required. Suggested locations for the retroreflective bands are shown in Figure 4.

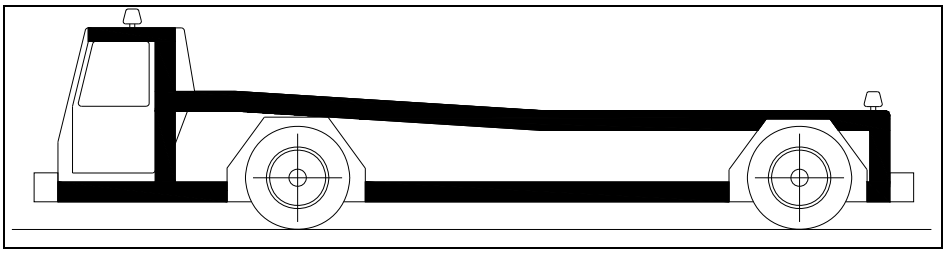

Figure 4: Suggested placement of retroreflective tape on a TLTV

d. Airport Security and Other Vehicles.

(1) Vehicles other than those that routinely traverse any portion of the AOA under the control of ATC, which are not escorted by a vehicle in constant two-way radio communication with ATC and properly equipped and authorized to operate in the AOA, must be provided with a flag on a staff attached to the vehicle so that the flag will be readily visible.

(2) At airports without air traffic control facilities, flags must be provided on all vehicles.

(3) The flag must be at least a 3-foot by 3-foot (0.9 meter by 0.9 meter) square having a checkered pattern of international orange and white squares at least 1 foot (300 mm) on each side (see Appendix A for the fabric color specification).

5. VEHICLE LIGHTING.

a. Airfield Service, Aircraft Support, and Airport Operations Vehicles.

(1) The standard for identification lighting is a yellow flashing light that is mounted on the uppermost part of the vehicle structure. A steady yellow light designates vehicles limited to non-movement areas.

(2) The light must be visible from any direction, day and night, including from the air.

(3) Color specifications for vehicle identification lights are per Appendix B.

(4) TLTVs. An LED light bar placed above the operator's cab may be used in place of the rotating yellow flashing light. In addition, a yellow flashing light (of any type) must be installed on the upper left-rear and right-rear corners of the TLTV, and must be activated when an aircraft is in tow. The size of the rear flashing lights must be large enough to meet the requirements of Section 5.c, but not so large as to interfere with the normal or towing operations of the TLTV.

b. Airport Emergency, Security, and Other Vehicles, which are not escorted by a properly lighted vehicle, must be identified during periods of low visibility by a light.

c. Characteristics of Flashing Lights:

(1) Ambulance lights must meet the specifications in the most current version of Federal Specification KKK-A-1822, and ARFF vehicles must meet NFPA, state, and local requirements.

(2) Lights must have peak intensity within the range of 40 to 400 candelas (effective) from 0° (horizontal) up to 10° above the horizontal and for 360° horizontally. The upper limit of 400 candelas (effective) is necessary to avoid damage to night vision.

(3) From 10° to 15° above the horizontal plane, the light output must be $1/10^{th}$ of peak intensity or between 4 and 40 candelas (effective).

(4) Lights must flash at 75 ± 15 flashes per minute.

NOTES:

1. The effective intensity of a flashing light is equal to the intensity of a steady-burning (fixed) light of the same color that produces the same visual range under identical conditions of observation.

2. If xenon flashtubes are used, refer to AC 150/5345-43, Specification for Obstruction Lighting Equipment, for guidance concerning methods of calculating effective intensity.

d. Light Colors.

(1) Airport Emergency Vehicles.

(a) **Ambulances.** Per the most current version of Federal Specification KKK-A-1822.

(b) **ARFF Vehicles.** Red or a combination of red-and-white flashing lights per the chromaticity requirements in Appendix B.

(2) Airport Security Vehicles. Signal blue or a combination of red and signal blue flashing light per the chromaticity requirements in Appendix B.

(3) Airfield Service, Aircraft Support, Airport Operations, and Other Vehicles. Yellow flashing light per the chromaticity requirements in Appendix B.

APPENDIX A. COLOR SPECIFICATIONS

A-1. SPECIFICATIONS. Colors specified in Table A-1 are per the Commission Internationale de l'Eclairage (CIE) L*a*b* system of color specification. For a description of this system, refer to American Society for Testing & Materials (ASTM) D 2244, *Standard Practice for Calculation of Color Tolerances and Color Differences from Instrumentally Measured Color Coordinates.*

Table A-1. Specification for vehicle and flag colors

Standard Illuminant D65 Usage	Chrome Yellow			Yellowish-Green			International Orange		
	Vehicle Paint			Vehicle Paint			Vehicle Paint / Flag Fabric		
CIELAB DATA	**L***	**a***	**b***	**L***	**a***	**b***	**L***	**a***	**b***
Centroid Color	72.8	24.4	77.6	78.3	-10.2	80.4	45.0	53.5	52.0
Point 1	72.8	31.8	82.9	78.3	-9.0	92.0	45.0	61.4	47.8
Point 2	72.8	25.5	66.7	78.3	-7.6	73.2	45.0	53.9	41.4
Point 3	72.8	18.0	69.3	78.3	-11.0	69.3	45.0	53.5	53.4
Point 4	72.8	22.4	86.0	78.3	-13.4	86.2	45.0	49.7	60.4
Light Limit	77.8			83.3			49.9		
Dark Limit	67.8			73.3			41.6		
Max ΔE	11.1			11.7			10.7		

A-2. COLOR TESTS. Acceptable colors are those that meet the gloss rating test and either a visual or an instrumental color test as follows:

NOTE: *Flag fabric colors must meet either the instrumental tests in Table A-1 or the visual method described in paragraph A-2b(1).*

a. Gloss Rating Test. This test is performed per ASTM D 523, *Standard Test Method for Specular Gloss,* on a paint sample of the color to be applied on the vehicle. An acceptable color sample is high gloss with a minimum gloss rating of 70 units, for 60° geometry.

b. Color Test Methods:

(1) Visual. Prepare a master specimen of the color (per Table A-1) and gloss (per paragraph A-2a). This specimen will be the master color and be used as the basis of comparison per ASTM D 5531-05, *Standard Guide for the Preparation, Maintenance, and Distribution of Physical Product Standards for Color and Geometric Appearance of Coatings.* To verify the paint color of a vehicle visually, vehicle paint samples must be

prepared and viewed per ASTM D 1729-96 (Reapproved 2009), *Standard Practice for Visual Appraisal of Colors and Color Differences of Diffusely-Illuminated Opaque Materials.*

(2) Instrumental. This test requires a test specimen sample and reference to Table A-1. All test specimen measurements should be conducted per ASTM E 1164-09a *Standard Practice for Obtaining Spectrometric Data for Object-Color Evaluation.* Test specimen tolerances must be per Table A-1 per the following:

(a) Plot the centroid color using the a* and b* CIELAB coordinate data from Table A-1 on graph paper or by entry of the coordinate data into a computer program. Plot and connect points 1 through 4 from the same table to form a quadrilateral; noting that the centroid color is within this figure. See Figure A-1 for plots of all three color specifications in Table A-1.

(b) Perform color sample measurements per ASTM E 1164-09a. If necessary, convert measurements to CIELAB L*, a*, and b* color space. See ASTM E 308-08, *Standard Practice for Computing the Colors of Objects by Using the CIE System,* for color space conversion formulae.

(c) An acceptable color is one that meets:

(i) the chromaticity requirements of the color samples a* and b* CIELAB coordinate data by falling within the quadrilateral;

(ii) the L* data lightness requirement by falling within the range defined by the light and dark data of Table A-1;

(iii) the total color difference (ΔE) by not exceeding the limits in Table A-1 when the CIELAB data are computed in the following formula:

$$\Delta E = (\Delta L^{*2} + \Delta a^{*2} + \Delta b^{*2})^{\frac{1}{2}}$$

where ΔL*, Δa*, and Δb* values are the differences between those values for the centroid color in Table A-1 and those of the color sample measurements.

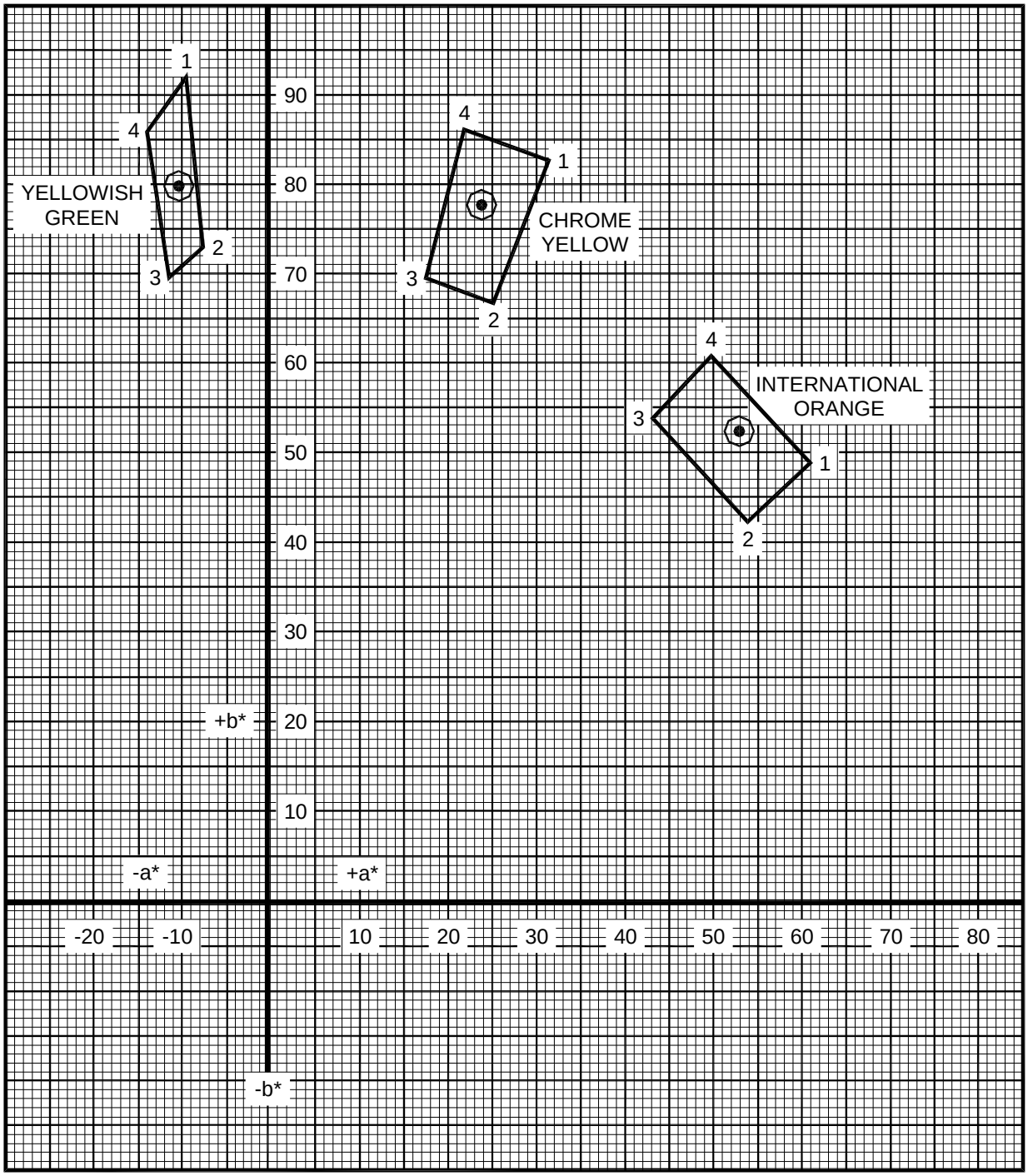

Figure A-1. Plot of selected color paint specifications

Intentionally left blank.

APPENDIX B. COLOR SPECIFICATIONS FOR VEHICLE IDENTIFICATION LIGHTS

B-1. SPECIFICATIONS. The Society of Automotive Engineers (SAE) Standard J578 Revised December 2006, *Color Specification*, defines the acceptable color boundary limits and measurement of emitted red, white, signal blue, and yellow light for vehicle lights. This standard applies to the overall emitted color of light from the device in lieu of emitted light from any small area of the lens. The color of emitted light must fall within the color boundaries per SAE J578 Revised December 2006 (color boundary equations are in the standard) using color measurement methods detailed in the standard. See FAA Engineering Brief #67, Light Sources Other Than Incandescent and Xenon for Airport and Obstruction Lighting Fixtures, for additional information and Alternative Lighting Devices.

Intentionally left blank.

APPENDIX C

FAA AC 150/5200-18C

AIRPORT SAFETY SELF INSPECTION

U.S. Department
of Transportation
Federal Aviation
Administration

Advisory Circular

Subject: AIRPORT SAFETY SELF-INSPECTION

Date: 04/23/04 **AC No:** 150/5200-18C
Initiated by: AAS-300 **Change:**

1. PURPOSE. This Advisory Circular (AC) provides information to airport operators on airport self-inspection programs and identifies items that airport operators should include in such a program.

2. FOCUS. Development of a self-inspection program in accordance with this AC represents an acceptable means of compliance with the 14 Code of Federal Regulations (CFR) Part 139 (Part 139) requirements.

3. CANCELLATION. Advisory Circular 150/5200-18B, Airport Safety Self-Inspection, dated 5/2/88, is cancelled.

4. RELATED READING MATERIAL.

a. 14 CFR Part 139, Certification of Airports. While Part 139 requirements are mandatory for a holder of a Part 139 Airport Operating Certificate, the regulation contains many safety practices that the Federal Aviation Administration recommends for use at all airports.

b. 14 CFR Part 77, Objects Affecting Navigable Airspace.

c. Current editions of the following advisory circulars:

(1) AC 150/5200-33, Hazardous Wildlife Attractants on or near Airports

(2) AC 150/5210-21, Airport Certification Manual (ACM). This reference is pertinent for certificated airports only.

(3) AC 150/5210-20, Ground Vehicle Operations on Airports.

(4) AC 150/5200-28, Notices to Airmen (NOTAMs) for Airport Operators.

(5) AC 150/5200-30, Airport Winter Safety and Operations.

(6) AC 150/5210-5, Painting, Marking, and Lighting of Vehicles Used on an Airport.

(7) AC 150/5230-4, Aircraft Fuel Storage, Handling, and Dispensing on Airports.

(8) AC 150/5300-13, Airport Design.

(9) AC 150/5340-1, Standards for Airport Markings.

(10) AC 150/5340-18, Standards for Airport Sign Systems.

(11) AC 150/5340-21, Airport Miscellaneous Lighting Visual Aids.

(12) AC 150/5340-24, Runway and Taxiway Edge Lighting System.

(13) AC 150/5340-26, Maintenance of Airport Visual Aid Facilities.

(14) AC 150/5370-2, Operational Safety on Airports During Construction.

(15) AC 150/5370-10, Standards for Specifying Construction of Airports.

d. Obtain the latest version of the free Advisory Circular publications from the FAA on its Web site at **www.faa.gov/arp/**. In addition, these ACs are available by contacting the U.S. Department of Transportation, Subsequent Distribution Office, SVC-121.23, Ardmore East Business Center, 3341 Q 75th Avenue, Landover, MD 20785. All FAA ACs are listed in the Advisory Circular Checklist, AC 00-2.1, which is available on the internet. The Checklist also explains how to obtain the circulars.

5. BACKGROUND.

a. While some hazardous airport conditions develop virtually instantaneously, others are gradual. It is important that the airport operator have an airport safety self-inspection program that monitors specific airport conditions in order to identify unsatisfactory conditions for prompt corrective actions. A number of airport operators have some form of a safety self-inspection program. The programs vary in scope and effectiveness from verbal instructions and unscheduled and unrecorded inspections to very comprehensive inspection programs with multiple daily schedules and widely distributed responsibilities.

b. At airports certificated under 14 CFR Part 139, the self-inspection program is a key component of an airport operator's airport certification program and required under §139.327. An effective self-inspection program enables an airport operator to operate in compliance to Part 139 standards on a day-to-day basis. In accordance with Part 139, all airports must have an Airport Operating Certificate if serving—

(1) Scheduled or unscheduled passenger operations of an air carrier with aircraft having a seating capacity of more than 30 passengers, or

(2) Scheduled passenger operations with aircraft having a seating capacity of more than 9 and less than 31 passengers.[1]

One of the requirements of Part 139 is that the operator of each certificated airport regularly conduct a daily safety self-inspection to ensure that prompt corrective action is taken to eliminate unsafe conditions on the airport. The specific requirements of the self-inspection program at each certificated airport are addressed in the airport certification manual.

c. This AC suggests components, responsibilities, and items for regularly scheduled, continuous surveillance, periodic condition and special inspections, and checklists for use during any of these airport safety self-inspections. This guidance can be modified as necessary to meet local situations. The information and guidance in this publication serve as a basis by which airports operators may develop their own safety self-inspection programs.

6. RESPONSIBILITIES.

a. Safety Self-Inspection. Self-inspection is a primary responsibility of the airport owner, operator, or a duly authorized representative. It is customary to assign the job of assuring overall airport ground safety to the airport manager or operations supervisor. Primary attention should be given to such operational items as pavement areas, safety areas, markings, signs, lighting, aircraft rescue and fire fighting, fueling operations, navigational aids, ground vehicles, obstructions, public protection, wildlife

[1] Part 139 is only applicable in the State of Alaska to airport operators serving scheduled or unscheduled passenger operations of an air carrier with aircraft having a seating capacity of more than 30 passengers.

hazard management, construction, and snow and ice control. Inspection of areas that have been assigned to individual air carriers, fixed base operators, or other tenants can be made the responsibility of the user. However, at Part 139 airports, the FAA will hold the certificate holder ultimately responsible for operating the airport safely.

b. Recommended Inspection Frequency.

(1) Regularly scheduled inspection. The airport should be inspected at least daily during times when aircraft activity is minimal in order to create the least impact on airport operations. Part of this inspection should be done during the hours of darkness at those airports that serve air carriers after dark.

(2) Continuous surveillance inspection. Those activities and facilities that have been identified to require continuous surveillance should be inspected any time personnel are in the air operations area. Hazardous conditions can occur at any time and in a short period of time.

(3) Periodic condition inspection. Periodic condition inspection of activities and facilities can be conducted on a regularly scheduled basis but less frequently than daily. The time interval could be weekly, monthly, or quarterly, depending on the activity or facility.

(4) Special inspection. Special inspections of activities and facilities should be conducted after receipt of a complaint or when an unusual condition or unusual event occurs on the airport, such as a significant meteorological event or an accident or incident. Special inspections should also be conducted at the end of construction activity to ensure that there are no unsafe conditions present related to the construction activity. A special inspection should be conducted prior to construction personnel leaving the airport in the event that corrective actions are necessary. Special inspections should be documented on the appropriate portions of the regularly scheduled inspection checklist.

c. Inspection Records. An effective safety self-inspection program includes procedures for reporting and correcting deficiencies. This means that the airport operator should have a work order system in place so that deficiencies can be corrected in an expeditious manner.

(1) The operator should issue a Notice to Airmen (NOTAM), as appropriate, through the appropriate Flight Service Station (FSS) reporting deficient conditions that could have an immediate and critical impact on the safety of aircraft operations. When corrective actions have been taken, the NOTAM should be cancelled. At Part 139 airports, other similar systems and procedures may be used if approved by the FAA.

(2) For even the smallest airport, it is desirable to use a safety self-inspection checklist that constitutes a written record of conditions noted, and acts as a check on follow-up actions taken. The scheduled use of a dated checklist will assure the regularity and thoroughness of safety inspections and follow-up. The checklist can be an important administrative tool for airport management. It can provide a snapshot of the condition of the airport, indicating trends, defining problem areas, indicating systems that are beginning to deteriorate and helping to define budgetary requirements. It is most desirable to use a format (see examples, Appendices 1–5) in which each inspected area of the airport complex is positively noted. Retain the checklist until indicated actions are completed. Airports certificated under Part 139 must retain the regularly scheduled inspection checklist for 12 months. Airports may use additional, specialized materials and forms, such as maintenance work orders, NOTAMs, fire station and first aid reports, etc. Some airport operators use computerized versions specifically designed to meet their self-inspection requirements. There are several vendors that have developed these computer programs that can use laptops and Personal Data Assistants (PDAs). However, the regularly scheduled inspection checklist should be the basic log documenting that safety inspection responsibilities are being met.

d. Follow-up. The airport operator should follow up on complaints or requests for corrective action and on all deficient items or problem areas noted during the daily inspection. Determine which problems

require immediate attention and treat those with highest priority, including developing appropriate NOTAM notification.

7. INSPECTION TECHNIQUES.

Inspectors should vary the pattern of the inspection. Fixed inspection patterns, while easy to learn, do not provide for an adequate inspection. The use of such fixed inspection patterns can lead to complacency and to the possibility of missing items that are in need of correction. When conducting an inspection on a runway and when there is time to do only one pass on that runway, inspection personnel, whenever practical, should drive towards the direction of landing aircraft with high intensity flashing beacon and headlights on day and night. This practice will enable self-inspection personnel to see approaching aircraft and improve visibility of the vehicle to pilots. However, it is recommended that a runway inspection be done in both directions. Inspection personnel should also drive the stub taxiways between the runway and parallel taxiway as these areas are commonly overlooked.

8. KNOWLEDGE AND EQUIPMENT FOR SELF-INSPECTlON.

a. Airport personnel who conduct safety self-inspections (referred to as inspectors in this AC) should receive training in at least the following areas:

b. Inspectors should know the location and types of airport facilities, airport rules and regulations and, at Part 139 airports, be familiar with the FAA-approved Airport Certification Manual.

(1) Airport familiarization, including airport signs, marking, and lighting;

(2) Airport Emergency Plan (if the airport has one);

(3) Notice to Airmen (NOTAM) notification procedures;

(4) Procedures for pedestrians and ground vehicles in movement areas and safety areas;

(5) Airport inspection procedures and techniques; and

(6) Discrepancy reporting procedures.

c. Inspectors should know the FAA Advisory Circular standards applicable to the airport and have access to copies for reference. Some applicable standards can be found in the FAA Advisory Circulars listed in paragraph 3c. (This is not an all-inclusive list.). They can also be found on the Internet at **www.faa.gov.**

d. Inspectors should have a vehicle equipped with:

(1) a two-way ground control radio capable of communicating with the Airport Traffic Control Tower on controlled airports and on the Common Traffic Advisory Frequency (CTAF) or UNICOM at uncontrolled airports (or at controlled airports when the tower is closed);

(2) a beacon for nighttime (or inclement weather conditions) inspections; and

(3) either a beacon or checkered flag for daytime inspections.

e. Inspectors should know and use correct radio communication phraseology, procedures and techniques, as specified in the Aeronautical Information Manual. If the airport operator uses airport police to do all or part of the self-inspection, the police should use aviation terminology and not 10-4 codes.

f. Inspectors should be supplied with checklists covering the various inspection areas (sample airport safety self-inspection checklists are contained in Appendices 1–5). While format of checklists vary, it is important to develop a checklist that is useful for the airport and its operation. If certain

inspectors will be responsible for only certain items, separate checklists pertinent to those areas may be developed. A sketch of the airport should accompany the checklist so that the location of problems can be marked for easy identification.

g. Inspectors should review the most recently completed checklist from the previous inspection cycle prior to beginning the inspection.

h. If construction is in progress, inspectors should be familiar with the safety plan for the project.

i. If the airport is certificated under Part 139, inspectors should be familiar with the airport certification manual requirements concerning training and self-inspection.

9. COMPONENTS OF A SAFETY SELF-INSPECTION PROGRAM. A successful safety self-inspection program has four components:

a. A regularly scheduled inspection of physical facilities (which must be conducted daily at airports certificated under Part 139 or in accordance with the FAA-approved airport certification manual). If the airport serves air carriers after dark, there should also be a nighttime inspection of lighting;

b. Continuous surveillance inspection of certain airport activities, such as fueling operations, construction, airfield maintenance;

c. A periodic condition inspection program for such things as surveying approach slopes, obstructions, etc.; and

d. Special condition inspections during unusual conditions or situations, such as changing weather or days of unusually high number of aircraft operations.

10. REGULARLY SCHEDULED INSPECTION.

The regularly scheduled inspection consists of specific observations of airport physical facilities on at least a daily basis. This inspection should concentrate on the areas described in this section, which are also included in Appendix 1. If deficiencies exist, the inspector should indicate the deficient item and identify its location on a airport sketch, providing dimensions and depths, as necessary. If appropriate, the inspector should take photographs to document the condition.

a. Pavement Areas. The condition of pavement surfaces is an important part of airport safety. Pavement inspection should be conducted daily before flight operations commence to ensure pavement surfaces are clear. As a minimum, a daily inspection should be performed of all paved areas that are the responsibility of the airport operator or as specified in the FAA-approved Airport Certification Manual. During the pavement inspection, the inspector should:

(1) Check the pavement lips—the area between full-strength pavement and shoulders or paved shoulders and safety areas—to assure that they are no greater than necessary to allow water to drain off the pavement. A lip height no greater than 1 1/2 inches is usually sufficient to allow proper drainage. (At airports certificated under Part 139, pavement lips shall not exceed 3 inches as stated in § 139.305.)

(2) Determine if there are any cracks wide enough to cause directional control problems for an aircraft. Report and monitor these cracks.

(3) Determine if there are any holes that could cause directional control problems for an aircraft. (At airports subject to Part 139. any hole that cannot be covered by a 5-inch circle, and the side slope at any point in the hole that exceeds 3 inches in depth and is 45 degrees or greater, is a discrepancy. If the hole cannot be covered by a 5-inch circle but the side slope at any point in the hole that exceeds 3

inches in depth or is less than 45 degrees, it may be a discrepancy if it is determined to be a surface variation that could impair directional control of an air carrier aircraft.)

(4) Check the condition of pavement areas for cracks, scaling, spalling, bumps, low spots, and for debris that could cause foreign object damage to aircraft.

(5) Check for vegetation growth along runway and taxiway edges that may impede drainage from the pavement surface.

(6) Check for vegetation growth in cracks.

(7) Report and monitor any cracks, holes, variations and vegetation that can cause loss of aircraft directional control or may cause pavement damage, including damaged caused by damming or ponding water.

b. **Safety Areas.** The inspector should know the dimensions of the runway and taxiway safety areas at the airport. At airports certificated under Part 139, the dimensions of the safety areas should be documented in the airport certification manual. During the safety area inspection, the inspector should:

(1) Determine if there are any hazardous ruts, depressions, humps or variations from the normal smooth surface.

(2) Check to ensure no object is located in a safety area, except objects that must be in the safety areas because of their functions (such as runway lights, signs, or navigational aids). These objects must be constructed on frangibly mounted structures of the lowest practical height. At Part 139 airports, the frangible point must be no higher than 3 inches above grade.

(3) Determine if the base for any equipment in safety areas is at grade level (especially during the winter thaw) and equipment and NAVAIDs mounted on frangible couplings.

(4) Check to ensure that manhole and handhole covers are at grade level and can support vehicles and aircraft. Check to ensure that mounts for light fixtures are at grade level.

(5) Check for surface variation and other damage caused by rodents or other animals.

(6) Report any objects that are not frangible or not at grade level. Also report extraneous equipment and objects, such construction equipment, and surface variations that would cause damage to an aircraft or impede emergency response vehicles. At airports certificated under Part 139, issue a NOTAM regarding objects in the safety area contrary to § 139.309 (see § 139.339)

c. Markings. Airport markings provide important information to pilots during takeoff, landing, and taxiing. To avoid confusion and disorientation, airport markings should be in compliance with FAA marking standards specified in AC 150/5340-1, Standards for Airport Markings. (Compliance with these standards is mandatory for operators of airports certificated under Part 139 and for airport operators that have accepted Federal funds for runway and taxiway construction/rehabilitation.) The inspector should know the appropriate markings required at the airport. During the marking inspection, the inspector should:

(1) Check markings for correct color-coding, peeling, blistering, chipping, fading, and obscurity due to rubber buildup.

(2) Check to see if all runway hold position markings are clearly visible.

(3) During and after construction projects, check new markings for compliance with FAA marking standards.

(4) If the markings have glass beads, check markings during periods of darkness to determine if the reflectivity of glass beads is adequate at night.

(5) Report and monitor any nonstandard marking or markings that are obscured, faded or deteriorating.

d. Signs. Signs provide important information to pilots while taxiing. To avoid pilot confusion and disorientation, airport signs should be in accordance with FAA sign standards specified in AC 150/5340-18, Standards for Airport Sign Systems. (Compliance with these standards is mandatory for operators of airports certificated under Part 139 and for airport operators that have accepted Federal funds for runway and taxiway construction/rehabilitation.) The inspector should know the appropriate sign standards and specifications at the airport and at a Part 139 certificated airport, ensure signs comply with the FAA-approved Sign Plan.

(1) Check signs to ensure they are easy to read, in accordance with color standards, retro-reflective, and that all lighted signs are working and not obscured by vegetation, dirt, snow, etc.

(2) Check signs to ensure they are frangibly mounted and concrete bases are properly maintained at grade level.

(3) Check to see that sign panels are not missing or damaged, that they have the correct legend and arrow orientation, and that they are not cracked or broken.

(4) During and after construction projects, check new signs for compliance to FAA sign standards and, at Part 139 airports, in accordance with the FAA-approved Sign Plan.

(5) During periods of darkness, check signs to ensure they are properly illuminated. Ensure mandatory instruction signs are illuminated with the associated runway lighting system. Check signs for correct operations; that they are on the correct circuits, they do not flicker and that they follow the intensity setting of the runway or taxiway lights.

(6) Report and monitor any nonstandard sign or any sign that is not functioning, is faded or damaged. At airports certificated under Part 139, issue a NOTAM regarding any malfunctioning holding position sign or ILS critical are sign, as specified under § 139.339

e. Lighting. At night and during periods of low visibility, lighting is important for safe airport operations. Lights come in different shapes, sizes, colors, and configurations and can be located either in the pavement or along its edges. Inspection of lighting is best accomplished during periods of darkness in order to evaluate lighting systems when they provide the primary visual aid for pilots. The inspection should concentrate on the lighting owned by the airport operator. However, the inspector should observe any lighting owned or operated by others and report any observed problems immediately to the appropriate responsible owner. During the lighting inspection, the inspector should:

(1) Check to ensure that the following are operable, if installed, and that vegetation or deposits of foreign material do not obscure the light fixture.

(i) Runway and taxiway edge lights;

(ii) Apron edge lights;

(iii) Runway centerline and touchdown zone lights;

(iv) Taxiway centerline lights or centerline reflectors;

(v) Runway threshold/end lights; and

(vi) Runway guard lights (both elevated and in-pavement, if installed).

(2) Check that the following are operable, if installed:

(i) Ramp lights and floodlights used in construction to ensure they are properly shielded);

(ii) Obstruction lights; and

(iii) Lighting in fuel storage areas.

(3) Report all fixtures missing and lights that are not working or appear dim.

(4) Report any missing or broken light fixture lenses.

(5) Ensure that runway and taxiway lights and runway threshold lights are the proper color and are oriented correctly.

(6) Check that lights function properly through the manual or radio control features, and that photocell controls function properly.

(7) Check the lights for proper alignment, aiming and correct changes in intensity, for correct height, erosion around the bases and the height of frangibility.

f. Navigational Aids (NAVAIDs). The inspection of NAVAIDs should concentrate on the visual navigational aids owned by the airport operator. However, the inspector should observe any navigational aids owned or operated by others, such as the FAA, and report any observed problems immediately to the NAVAID owner. During the inspection of NAVAIDs, the inspector should:

(1) Determine if the segmented circle is clear of vegetation and that it can be seen easily from the air.

(2) Determine if the airport rotating beacon is visible and working properly.

(3) Check the wind cone(s) to ensure that it swings freely, the cone fabric is not faded or frayed, and, if lighted, that all lights are operating.

(4) Determine if the Runway End Lights (RENLs, formerly known as Runway End Identifier Lights) are flashing in proper sequence and mounted on frangible couplings.

(5) Check Visual Glide Slope Indicators (VASIs, PLASIs, or PAPIs) to ensure that their lights are working and mounted on frangible couplings.

(6) Determine if the Approach Lighting systems are functioning properly.

(7) Report and monitor any NAVAID that is malfunctioning, inoperable or misaligned, damaged or missing.

g. Obstructions. The inspection of obstructions should concentrate on a visual check of construction underway on or near the airport that could affect aircraft operations. This also includes checking for any vegetation, especially, trees, that may penetrate the Part 77 surfaces. During the inspection of obstructions, the inspector should:

(1) Check to ensure that construction equipment, especially tall cranes being used at construction sites, are not an obstruction. If construction is found and thought to create an obstruction, the airport operator should determine if proper notification to FAA, such as is required through Part 77 or Airport Layout Plan review, has been provided.

(2) Determine if obstructions are properly marked and lighted.

(3) Direct any person proposing construction near a public-use airport meeting the notice requirements contained in Part 77, Objects Affecting Navigable Airspace, to the Air Traffic Division or Airports District Office immediately if their construction has not been reported to the FAA.

(4) Report and monitor any obstruction light that is missing, inoperative or damaged, and any object that appears to be an obstruction and is not properly marked or lit.

h. Fueling Operations. The daily inspection on aircraft fueling operations should concentrate on a quick inspection for the most common problems concerning compliance with local fire safety codes at fuel storage areas and with mobile fuelers. The inspection should also include security, fire protection, general housekeeping, and fuel dispensing facilities and procedures. A more detailed fueling operation inspection should be scheduled quarterly (see Quarterly Fueling Operations under Periodic Condition Inspection). During the daily inspection of aircraft fueling operations, the inspector should:

(1) Determine if the fueling operator is permitting any unsafe fueling practices or is in violation of local fire code, such as failure to bond aircraft with the mobile fuelers during fueling operations or fueling personnel smoking while fueling aircraft.

(2) Check to ensure that the appropriate signs for the fuel farm are installed and that all gates are locked except when the facility is occupied by an authorized user.

(3) Report and monitor any unsafe fueling practices and violation of local fire codes. At Part 139 airports, report any noncompliance with fuel fire safety procedures specified in the FAA-approved Airport Certification Manual.

i. Snow and Ice. The inspector should be familiar with the airport's snow and ice removal procedures and guidance provided in AC 150/5200-30, Airport Winter Safety and Operations. At Part 139 certificated airports, the inspector should be familiar with the airport's FAA-approved Snow and Ice Control Plan. During the snow and ice control inspection, the inspector should:

(1) Determine if any lights and signs are obscured by snow or damaged by snow removal operations.

(2) Check to ensure that snow banks and drifts next to the runway and taxiways provide clearance for aircraft wing tips, engines, and propellers.

(3) Check to ensure that snow is not piled across the runway threshold or across runway/runway intersections.

(4) Check to be sure that no foreign objects are left on the pavement from snow removal operations.

(5) Check to ensure that snow removal operations have not blocked any taxiways or access routes dedicated for aircraft rescue and fire fighting equipment.

(6) Check to ensure that snow is not accumulated or piled in the critical areas for electronic NAVAIDs.

(7) Check for and report slippery pavement conditions in terms of either braking action or MU values. If a friction measurement device is available, issue the appropriate numbers obtained from the equipment. (Do not attempt to correlate friction measurement numbers with braking action reports.)

(8) Report and monitor any snow and ice accumulation that has been missed by the snow and ice removal operation, and any dangerous condition created by such operations, such as obscured signs or lights. At airports certificated under Part 139, issue a NOTAM regarding snow, ice, slush or water on the movement area or loading ramps, and parking areas, as specified under § 139.339.

j. Construction. The inspector should be familiar with the airport's construction safety procedures and guidance provided in AC 150/5370-2, Operational Safety on Airports During Construction. At Part 139 certificated airports, the inspector should be familiar with the airport's FAA-approved Construction Safety Plan. During the construction inspection, the inspector should:

(1) Determine if stockpiled material and construction materials are properly stored to keep them from being moved by wind, jet blast, or prop wash, and is not left in safety areas or movement area.

(2) Check all construction adjacent to movement areas to ensure areas are identified with conspicuous marking and lighting.

(3) Determine if construction equipment (such as bulldozers, cranes, etc.) are marked and lighted and parked clear of the safety areas.

(4) Ensure construction barricades are properly positioned to define the limits of construction and hazardous areas and, if barricades are lighted, check to ensure lights are working properly and are positioned correctly.

(5) Check to ensure that debris and foreign objects are continuously being picked up around construction areas.

(6) Check for open trenches in the safety areas or adjacent to movement areas.

(7) Check operation of lighting in areas adjacent to construction daily before the construction crews depart for the day. In particular, ensure that mandatory instruction signs remain lit with the associated runway lights, even on taxiways that have been closed for construction.

(8) Check NOTAMs daily during construction projects to ensure they accurately reflect the conditions on the airport.

(9) Verify that closed taxiways or runways are properly marked and lighted.

(10) Report and monitor any dangerous condition created by construction activity, including damage to signs, lights, markings and NAVAIDS or equipment and supplies left in movement areas and safety areas.

k. Aircraft Rescue and Fire Fighting. During the inspection of aircraft rescue and fire fighting (ARFF) capabilities, the inspector should:

(1) Check the status of ARFF response, including the availability of equipment, fire fighters and extinguishing agent. At Part 139 airports, ensure that such ARFF capabilities comply with the FAA-approved Airport Certification Manual and that the airport's ARFF Index is still appropriate for air carrier aircraft served.

(2) Ensure alarm and emergency notification communication systems are operable.

(3) Determine the adequacy of available fire extinguishing agents.

(4) Check for construction or maintenance activity on the movement area that could affect ARFF response routes. Ensure that the ARFF Department has been notified if construction or maintenance activity could affect emergency response routes.

(5) Report and monitor any ARFF vehicle, equipment or extinguishing agent that is not available or inoperative; any ARFF personnel that are not available; and any changes to aircraft that may require a change to ARFF capabilities. At Part 139 airports, notify the FAA if ARFF vehicles is inoperative and cannot be replaced immediately, as specified under § 139.319(g) and issue a NOTAM regarding non-availability of any rescue and firefighting capability, as specified under § 139.339.

l. Public Protection. During the public protection inspection, check gates, fencing, locks, and other safeguards are in place and functioning properly to prevent inadvertent entry to movement areas by unauthorized persons and vehicles and offer protection from jet blast. Report and monitor any safeguards that are damaged or missing. In accordance with the airport's security plan, report unauthorized persons or vehicles in the movement area (airports regulated by the Transportation Security Administration may have additional requirements for reporting and responding to unauthorized persons and vehicles).

m. Wildlife Hazard Management. During the wildlife hazard inspection, the inspector should check for evidence of birds or animals on the runways, taxiways, aprons, and ramps or other signs that

wildlife problems may have developed - such as large flocks of birds on or adjacent to the airport. Wildlife hazards found during the daily self-inspection should be properly documented. All dead wildlife found and all wildlife aircraft strikes should be reported to the FAA on the FAA Form 5200-7, Bird/Other Wildlife Strike Report. This form may be obtained from the FAA Internet site, at **www.faa.gov.** Additionally, the inspector should check fencing and gates for wildlife accessibility and should ensure that wildlife control equipment is available and operational.

11. CONTINUOUS SURVEILLANCE INSPECTION. Continuous surveillance inspection consists of general observation of activities for compliance with regulations, procedures, etc., as well as abnormalities with physical facilities that are readily apparent. This is performed any time inspection personnel are on the air operations area. Continuous surveillance of airport physical facilities and activities should cover at least the areas described in this section, which are also included in Appendix 2.

a. Ground Vehicles. During the continuous surveillance inspection of ground vehicles, the inspector should:

(1) Determine if vehicle drivers are following the airport's procedures and arrangements for the orderly operations of ground vehicles (including mowing machines or other maintenance vehicles in the safety areas). Extra attention should be paid to ground vehicle activity during construction, winter operations, and other special events.

(2) Report and monitor any vehicle operator that is not complying with the airport's vehicle procedures and arrangements.

(3) Report any ground vehicle accident observed and any ground vehicle signs and markings that are damaged, missing or obscured.

b. Fueling Operations. The inspector should:

(1) Emphasize fire and explosion hazards inherent in aircraft refueling.

(2) Ensure proper bonding is being used, deadman controls are not blocked, and no smoking prohibitions are being observed, and aircraft are not being fueled inside hangars.

(3) Check for proper parking of mobile fuelers to ensure these vehicles are at least 10' apart and 50' from buildings.

(4) Check for fuel leaks or spills in the fuel storage area and around mobile fuelers.

(5) Determine if the fuel farm is free of flammable materials, including litter and vegetation.

(6) Report and monitor any of unsafe fueling conditions discussed above and other obvious violations of local fire code and airport fuel fire safety procedures.

c. Snow and Ice. During the continuous surveillance inspection of snow and ice removal operations, the inspector should check snow or ice covered pavements and report and monitor any surfaces where snow and ice may affect the safety of aircraft operations. In addition, the inspector should monitor snow and ice removal NOTAMS to ensure they remain current and issue timely corrections, as necessary. If the airport uses other means to notify tenants of snow and ice removal operations, e.g., faxed or electronic messages, the inspector should also monitor this information for accuracy. Check to ensure that snow or ice on pavement surfaces does not affect the safety of aircraft operations and that NOTAMS are current.

d. Construction. The Inspector should check construction projects to ensure that the contractor is following the construction safety plan. During the continuous surveillance inspection of construction activity, the inspector should check for, and report, any of the following conditions:

(1) Unauthorized use of runways, taxiways, and aprons by construction personnel and equipment.

(2) Conditions that may result in runway incursions and other irregularities. This includes ensuring that construction areas are delineated appropriately with barricades, cones, markings, etc.

(3) Construction equipment is not operated in ILS/MLS critical areas unless coordination with FAA has been accomplished.

(4) Perimeter gates are left open and unattended, unlocked or construction vehicles and personnel are not following access and escort procedures.

(5) Construction vehicles not properly marked or missing appropriate flags and/or beacons.

(6) Foreign object debris on haul roads adjacent to movement areas that can be tracked onto taxiways, aprons, and ramp areas.

(7) Confusing or missing signs, markings or lighting that could potentially confuse or mislead pilots.

(8) Barricades and lighting are in place and operational.

e. Public Protection. Pay special attention to public protection during construction and special events. During the continuous surveillance inspection of safeguards used to protect the public, the inspector should check for, and report, any of the following conditions:

(1) Unauthorized personnel, vehicles, and animals, particularly in areas aircraft passengers and the general public are present on the air carrier ramp and other portions of the movement area, i.e, remote aircraft parking locations.

(2) Inoperable or blocked gates, particularly those that would impede access by aircraft rescue and fire fighting equipment.

(3) **O**pen or unlocked gates and missing or damaged signs posted to prevent unauthorized access to the airfield.

(4) Damaged or missing jet blast fences.

f. Wildlife Hazard Management. During the continuous surveillance inspection of wildlife hazards, the inspector should check for, and report, any of the following conditions:

(1) Birds or animals, such as dogs, deer, etc., on or adjacent to the runways, taxiways, aprons, and ramps to determine if there is a potential wildlife hazard problem.

(2) Potential hazard created by birds on or adjacent to the airport.

(3) Wildlife strikes and carcasses found on the runways. Report these on FAA Form 5200-7, Bird/Other Wildlife Strike Report. This form may be obtained from the FAA Internet site at **www.faa.gov.**

g. Foreign Object Debris (FOD). The inspector should continuously check for, and remove any FOD in movement areas, aircraft parking areas and loading ramps.

12. PERIODIC CONDITION INSPECTION. Periodic condition inspections consist of specific checks of physical facilities on a regularly scheduled basis (but less frequently than daily). Checks may require use of equipment (e.g., Walker Bar to measure VASI glide slope angles or transit to survey approach slopes, or continuous friction measurement equipment) or checking specific features of physical facilities. Periodic inspection of airport physical facilities and activities should cover at least the areas described in this section, which are also included in Appendix 3.

a. Pavement Areas. The inspector should check pavement surfaces for rubber buildup, polishing, or other items affecting friction.

b. Markings. The inspector should:

(1) Check pavement markings to ensure they are correct and clearly visible. Markings on concrete and faded asphalt should be outlined with a black border.

(2) Determine if markings are visible at night, especially examine for rubber buildup in the touchdown zone areas.

c. Signs. The inspector should check signs faces for peeling and for fading or faded colors.

d. Quarterly Fueling Inspections. Airports certificated under Part 139 are required to establish fire safety standards for safe fueling operations and conduct quarterly inspections of the fueling facilities. The inspection procedures in this section are based on the NFPA 407 fire code for airport fueling operations, which is one of the more common fire codes in effect at certificated airports. The fire safety standards for fueling operations should be listed in the Airport Certification Manual (ACM) and the quarterly inspections should be conducted for compliance to the fueling fire safety standards listed in the ACM. Sample quarterly inspection checklists for fuel storage areas and mobile fuelers are included in Appendix 5. Typical fire safety standards to inspect quarterly are listed below. Airports certificated under Part 139 are required to maintain a record of this inspection for at least 12 months.

(1) Fuel storage areas and loading/unloading stations. The inspector should:

(i) Check fuel storage areas for adequate fencing and security to prevent unauthorized access or tampering.

(ii) Check for “No Smoking” signs that are clearly visible.

(iii) Check fuel storage areas for materials such as trash or vegetation that could contribute to the spread of fire. Also check for equipment, functions or activities that could be ignition sources.

(iv) Note if fueling equipment appears to be in good operating condition and free of fuel leaks.

(v) Check piping for reasonable protection from damage by vehicles if piping is above ground.

(vi) Check fuel storage areas for at least two accessible and serviceable fire extinguishers. Where the open hose discharge capacity of the equipment if more than 200 gallons per minute, at least one wheeled extinguisher with at least 125 lbs of agent is also required.

(vii) Check for explosion proof equipment, switches and wiring that is reasonably protected from heat, abrasion or impact, which could cause an ignition source.

(viii) Check for piping, filters, tanks and pumps being electrically bonded together and interconnected to an adequate grounding rod.

(ix) Check for a serviceable bond/ground wire with clip at each loading/unloading facility for grounding tankers and mobile fuelers.

(x) Check loading stations for deadman control features.

(xi) Look for a boldly marked emergency cutoff capable of stopping all fuel flow with one physical movement. The emergency cutoff should be located outside the probable fuel spill area near the route that normally is used to leave the spill area or to reach the fire extinguishers.

(2) Mobile fuelers. At least once every 3 months, inspect all fuel trucks to ensure they meet fire safety standards. The inspector should:

(i) Note if mobile fuelers appear to be in good operating condition and free of fuel leaks.

(ii) Check mobile fuelers for parking at least 50 feet from a building and at least 10 feet from each other. Note: Some airports have a mobile fueler maintenance building that is approved by the local fire marshal.

(iii) Check for flammability decals on all sides. Lettering should be at least 3 inches high. Also check for hazardous materials placards on all sides. The Hazmat number for Jet A trucks should be #**1863** and #**1203** for 100LL trucks.

(iv) Check the cab for a "No Smoking" sign and the presence of smoking equipment. Ashtrays and cigarette lighters are not to be provided.

(v) Check for two fire extinguishers, accessible from each side of the mobile fueler. Fire extinguishers should be charged, sealed and tagged from the last fire extinguisher inspection. Check dry chemical extinguishers to ensure they are only B-C rated. ABC rated multi-purpose dry chemical extinguishers are not to be used on mobile fuelers as they are highly corrosive to aircraft and can cause significant damage to aircraft engines.

(vi) Check emergency fuel cutoffs to ensure they are boldly marked and operable. There should be an emergency fuel cutoff accessible from each side.

(vii) Check electrical equipment, switches, wiring and tail light lens covers for explosion proof construction and reasonable protection form heat, abrasion or impact which could be an ignition source.

(viii) Check for serviceable bonding wires and clamps.

(ix) Check nozzles for deadman control feature.

(x) Check the vehicle exhaust system for exhaust leaks and for adequate shielding if it extends under the fuel tank portion of the vehicle.

e. Navigational Aids. Periodically check the aiming of REILs and Visual Glide Slope Indicators owned by the airport.

f. Lighting. The inspector should:

(1) Determine that power generator and circuit resistance tests are being conducted.

(2) Ensure lights with adjustable optical systems are checked for proper aiming.

g. Obstructions. The inspector should:

(1) Check to ensure there are no overhead power lines in the aircraft parking areas.

(2) Annually survey trees and other structures near the airport that could affect glide path angles, approach light lanes, or be an obstruction to Part 77 surfaces.

h. Aircraft Rescue and Fire Fighting. The inspector should:

(1) Periodically determine if the aircraft rescue and fire fighting equipment is capable of meeting response times, if it is required under Part 139.

(2) Ensure that recurrent training and hot-fire drills are being conducted as required by Part 139.

(3) Check to ensure the availability of adequate entry tools.

13. SPECIAL CONDITION INSPECTIONS. Special condition inspections occur after receipt of a complaint or as triggered by an unusual condition or event. A special inspection should be conducted after an accident or incident. Depending upon circumstances, special condition inspections may include the inspection of any of the specific facilities or activities under the other three components. A special condition inspection of airport physical facilities and activities should cover at least the areas described in this section, which are also included in Appendix 4.

a. Pavement Areas. After a rain or thunderstorm, the inspector should check the pavement areas for ponding and edge damming.

b. Markings and Signs. The inspector should:

(1) Determine if markings are visible at night especially when the pavement is wet following a rain.

(2) After construction or maintenance operations, ensure that pavement markings are correct.

c. Safety Areas. The inspector should:

(1) Ensure that the storm sewer system is checked to verify that inlets are not clogged and drainage channels are free of debris. Note any standing water.

(2) Ensure all inlet covers are in place and sewer covers are at grade level.

(3) Conduct a special inspection before reopening a runway or taxiway following any construction or maintenance that has been performed in or around that safety area.

(4) Any time an aircraft has left the pavement and entered a safety area, check to ensure that no ruts or holes have been made by the aircraft tires or by personnel and equipment during the recovery operation.

(5) Check for construction and maintenance activities to ensure that no hazardous conditions have been created (equipment left in safety areas, unacceptable pavement lips created by ground alteration work, ruts from mowing equipment, etc.).

(6) Inspect engineered materials arresting system (EMAS), if installed, for damage and for deterioration.

(7) Physically drive or walk the safety areas to check for any discrepancies.

d. Snow and Ice. Several special inspections may be needed during a winter storm until the airport is back to a normal operation. The inspector should:

(1) Check to ensure that all foreign objects have been picked up after snow and ice removal operations.

(2) If a friction measurement device is available, issue the appropriate numbers obtained from the equipment. Do not attempt to correlate friction measurement numbers with braking action reports. If a friction measurement device is not available, issue to Air Traffic braking action reports.

(3) Conduct a special sign inspection after snowstorms for signs that may have been damaged by plows or by snow thrown by blowers.

e. Construction. The inspector should:

(1) Ensure that construction areas are barricaded and lighted properly.

(2) Check construction equipment to ensure that they are parked within the pre-arranged areas.

(3) Conduct night inspections to ensure that barricades, warning lighting, and reflectors are adequate to keep aircraft away from the construction area.

(4) Check the location of construction material and stockpiles to ensure that they are outside of safety areas and do not block any signs.

(5) Check any movement areas adjacent to construction areas or movement areas traversed by construction vehicles to ensure there is no FOD present.

(6) Check movement areas around construction sites for potentially confusing marking, lighting, and signs that could cause pilot confusion or result in a runway incursion.

f. Surface Movement Guidance and Control Systems (SMGCS).

(1) For operations below 1,200 feet runway visual range, the inspector should conduct an initial inspection of stop bar lights, runway guard lights, clearance bar lights, taxiway centerline lights, and taxiway edge lights installed on the low visibility routes in accordance with the airport's SMGCS plan.

(2) SMGCS lighting systems that are not electronically monitored should be periodically inspected every 2 to 4 hours for during operations below 1,200 feet to 600 feet. For operations below 600 feet, these inspections should take place every 2 hours. Such inspections should be detailed in the airport's SMGCS plan.

14. CONDITION REPORTING. Alert users of the airport to any unsafe conditions that exists and that could affect their operations. Ensure appropriate NOTAMS are issued for unsafe conditions that are identified during an inspection but cannot be corrected immediately. After reporting NOTAMs to the Flight Service Station, follow-up to ensure that the NOTAMS were processed and transmitted.

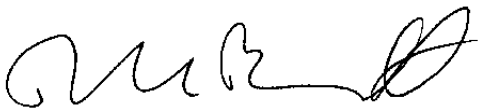

David L. Bennett
Director, Office of Airport Safety and Standards

APPENDICES 1–4
SUGGESTED AIRPORT SAFETY SELF-INSPECTION CHECKLISTS

An airport safety self-inspection checklist should cover the condition of the facilities and equipment on the airport for it to be a part of a good safety inspection program. The checklist should be developed so that it is useful for the airport and its operation. A sketch of the airport is highly recommended to readily identify the location of problems found during the daily inspection.

The suggested checklists consist of a listing of facilities and equipment and a series of conditions that are inspected.

The blank squares indicate the conditions to be evaluated for each facility. A check (√) in one of these squares would indicate that the condition of the facility and equipment was found to be satisfactory. On the other hand, an "x" in one of these squares would indicate that the condition of the facility and equipment was found to be unsatisfactory.

When an unsatisfactory condition is found:

1. An "x" for each applicable square should be entered;

2. A note provided in the Remark/Action Taken section;

3. The location of the condition should be identified in the airport sketch; and

4. Appropriate follow-up action including NOTAMs should be initiated. Corrective action should be documented on either the self-inspection checklists or on a separate work order system.

These checklists are ideal for electronic conversion to PDAs and laptop computers.

Page Intentionally Blank

APPENDIX 1

AIRPORT SAFETY SELF-INSPECTION CHECKLIST

DATE: _____ **DAY**: _____ √ **Satisfactory**

X Unsatisfactory

Day Inspector/Time: _____ **Night Inspector/Time:** _____

FACILITIES	CONDITIONS	D	N	REMARKS	RESOLVED BY (Date/Initials)
Pavement Areas	Pavement lips over 3"				
	Hole – 5" diam. 3" deep				
	Cracks/spalling/heaves				
	FOD: gravel/debris/sand				
	Rubber deposits				
	Ponding/edge dams				
Safety Areas	Ruts/humps/erosion				
	Drainage/construction				
	Support equipment/aircraft				
	Frangible bases				
	Unauthorized objects				
Markings	Clearly visible/standard				
	Runway markings				
	Taxiway markings				
	Holding position markings				
	Glass beads				
Signs	Standard/meet Sign Plan				
	Obscured/operable				
	Damaged/retroreflective				

FACILITIES	CONDITIONS	D	N	REMARKS	RESOLVED BY (Date/Initials)
Lighting	Obscured/dirty/operable				
	Damaged/missing				
	Faulty aim/adjustment				
	Runway lighting				
	Taxiway lighting				
	Pilot control lighting				
Navigational Aids	Rotating beacon operable				
	Wind indicators				
	RENLs/VGSI systems				
Obstructions	Obstruction lights operable				
	Cranes/trees				
Fueling Operations	Fencing/gates/signs				
	Fuel marking/labeling				
	Fire extinguishers				
	Frayed wires				
	Fuel leaks/vegetation				
Snow & Ice	Surface conditions				
	Snowbank clearances				
	Lights & signs obscured				
	NAVAIDs				
	Fire access				

FACILITIES	CONDITIONS	D	N	REMARKS	RESOLVED BY (Date/Initials)
Construction	Barricades/lights				
	Equipment parking				
	Material stockpiles				
	Confusing signs/markings				
Aircraft Rescue and Fire Fighting	Equipment/crew availability				
	Communications/alarms				
	Response routes affected				
Public Protection	Fencing/gates/signs				
	Jet blast problems				
Wildlife Hazards	Wildlife present/location				
	Complying with WHMP				
	Dead birds				

Comments/Remarks: _____

Airfield Map on Reverse Side

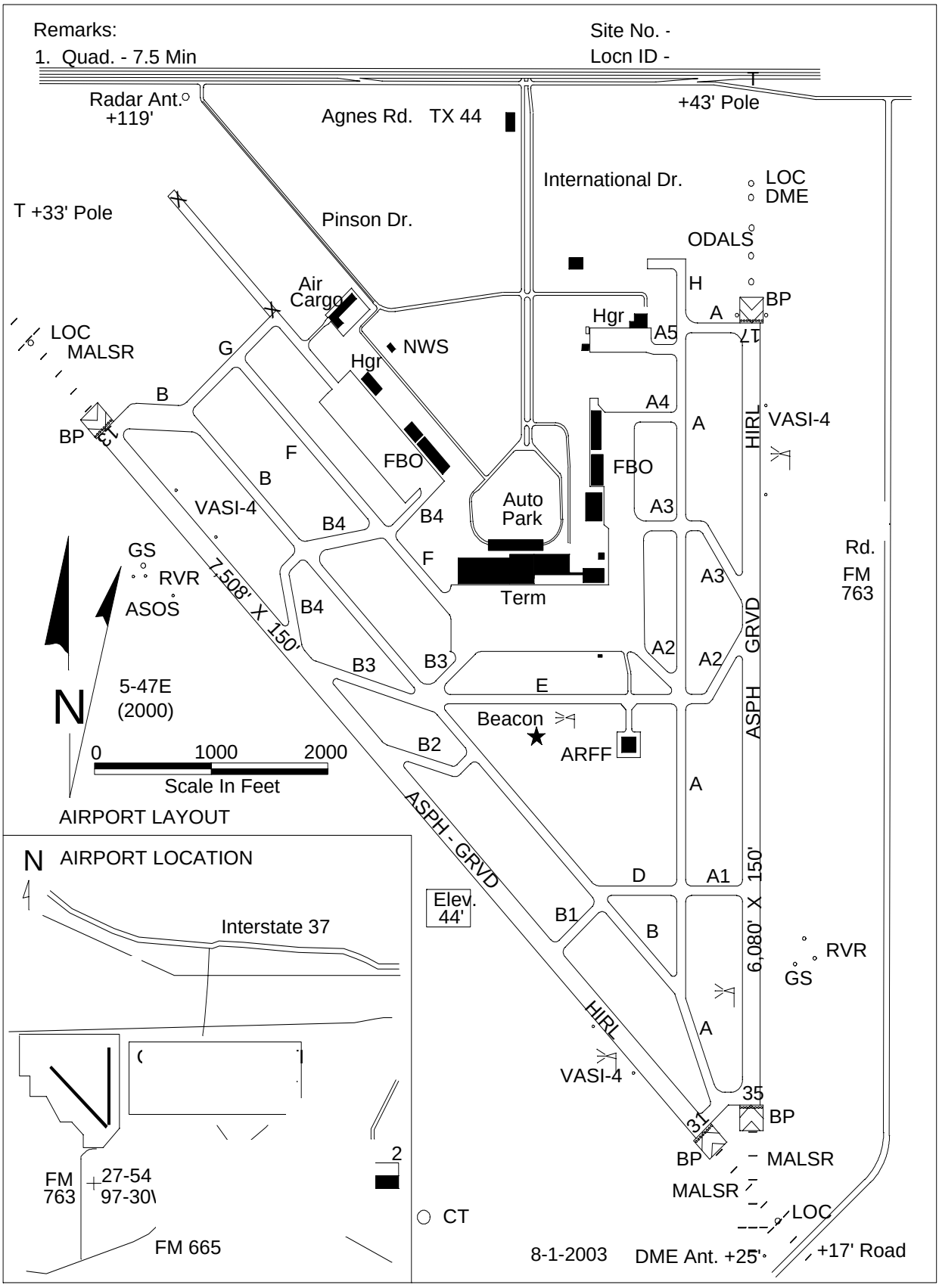
Remarks:
1. Quad. - 7.5 Min
Site No. -
Locn ID -
Radar Ant.
+119'
Agnes Rd. TX 44
+43' Pole
International Dr.
LOC
DME
T +33' Pole
Pinson Dr.
ODALS
Air
Cargo
H
BP
A
Hgr
A5
LOC
MALSR
G
NWS
Hgr
B
A4
A
VASI-4
BP
F
FBO
FBO
B
Auto
Park
A3
VASI-4
B4
B4
GS
RVR
ASOS
7,508' X 150'
F
Term
A3
Rd.
FM
763
B4
A2
A2
B3
B3
E
5-47E
(2000)
N
Beacon
ARFF
B2
0
1000
2000
Scale In Feet
AIRPORT LAYOUT
ASPH - GRVD
ASPH GRVD
HIRL
A
AIRPORT LOCATION
Interstate 37
D
A1
Elev.
44'
B1
B
6,080' X 150'
RVR
GS
HIRL
A
VASI-4
35
BP
31
BP
MALSR
MALSR
FM
763
27-54
97-30
2
CT
LOC
FM 665
8-1-2003
DME Ant. +25'
+17' Road

APPENDIX 2

CONTINUOUS SURVEILLANCE CHECKLIST

√ Satisfactory

DATE: _____ DAY: _____ X Unsatisfactory

TIME: _____ INSPECTOR: _____

FACILITIES	CONDITIONS	√	REMARKS/ACTIONS TAKEN
Ground Vehicles	Rules/Procedures Followed		
Fueling Operations	Fire/Explosion Hazards		
	Signing/No smoking		
Snow & Ice	Surface Conditions		
Construction	Safety Plan		
	Runway Incursions		
	Runway & Taxiway Use		
	FOD		
Public Protection	Unauthorized Persons		
	Unauthorized Vehicles		
	Gates clear		
Wildlife Hazards	Birds/Animals		
Miscellaneous	Pedestrians in Movement Areas		
	Passenger Load/Unload		
	Debris in Movement Area		
Additional Remarks			

Airfield Map on Reverse Side

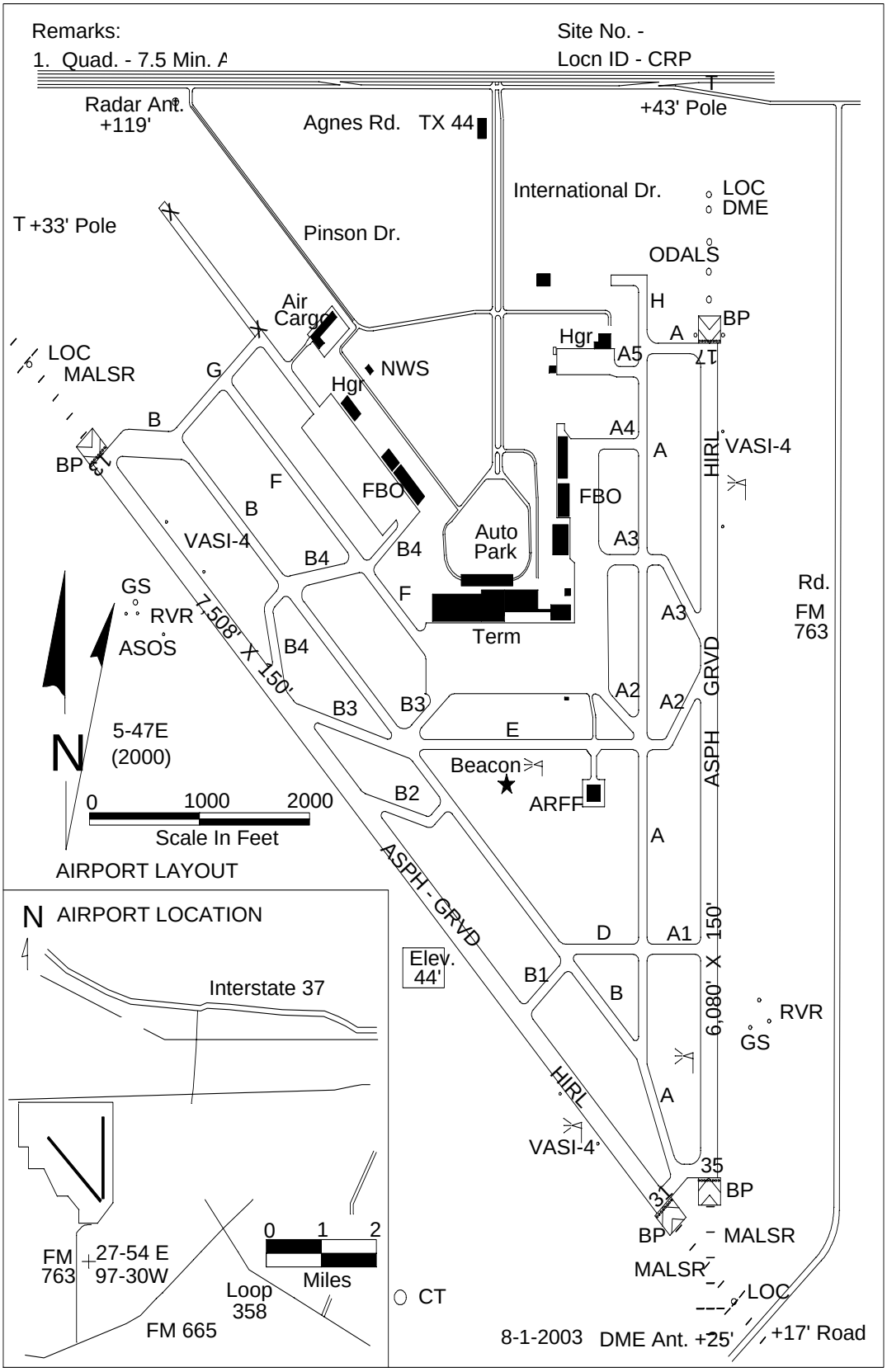
Remarks:
1. Quad. - 7.5 Min. A
Site No. -
Locn ID - CRP
Radar Ant.
+119'
Agnes Rd.
TX 44
+43' Pole
International Dr.
LOC
DME
T +33' Pole
Pinson Dr.
ODALS
Air
Cargo
H
BP
A
Hgr
A5
LOC
MALSR
G
NWS
Hgr
B
A4
A
HIRL
VASI-4
BP
F
FBO
FBO
B
VASI-4
Auto
Park
A3
B4
B4
F
GS
RVR
ASOS
7,508' X 150'
Term
A3
Rd.
FM
763
B4
A2
A2
GRVD
B3
B3
E
N
5-47E
(2000)
Beacon
ASPH
0
1000
2000
B2
ARFF
A
Scale In Feet
AIRPORT LAYOUT
ASPH - GRVD
N
AIRPORT LOCATION
D
A1
150'
Elev.
44'
B1
B
Interstate 37
6,080' X
RVR
GS
HIRL
A
VASI-4
35
BP
BP
MALSR
MALSR
LOC
0
1
2
FM
763
27-54 E
97-30W
Miles
Loop
358
CT
FM 665
8-1-2003
DME Ant. +25'
+17' Road

APPENDIX 3

PERIODIC CONDITION INSPECTION CHECKLIST

√ Satisfactory

DATE: _____ DAY: _____ X Unsatisfactory

TIME: _____ INSPECTOR: _____

FACILITIES	CONDITIONS	√	REMARKS/ACTIONS TAKEN
Pavement Areas	Rubber Deposits		
	Polishing		
Markings and Signs	Visible		
	Standards		
Fueling Operations	Physical Facilities		
	Mobile Fuelers		
	Fire Extinguishers		
	Fuel Marking/Labeling		
	Frayed Wiring		
Navigational Aids	RENLs/VGSI Aiming		
Lighting	Power Generator Check		
	Circuit Resistance Test		
	Aim/Adjustment		
Obstructions	Surveyed Trees/Structures		
	Overhead Power Lines		
Aircraft Rescue and Fire Fighting	Response Times		
	Live Fire Drills		
	Training		

Additional Remarks

Airfield Map on Reverse Side

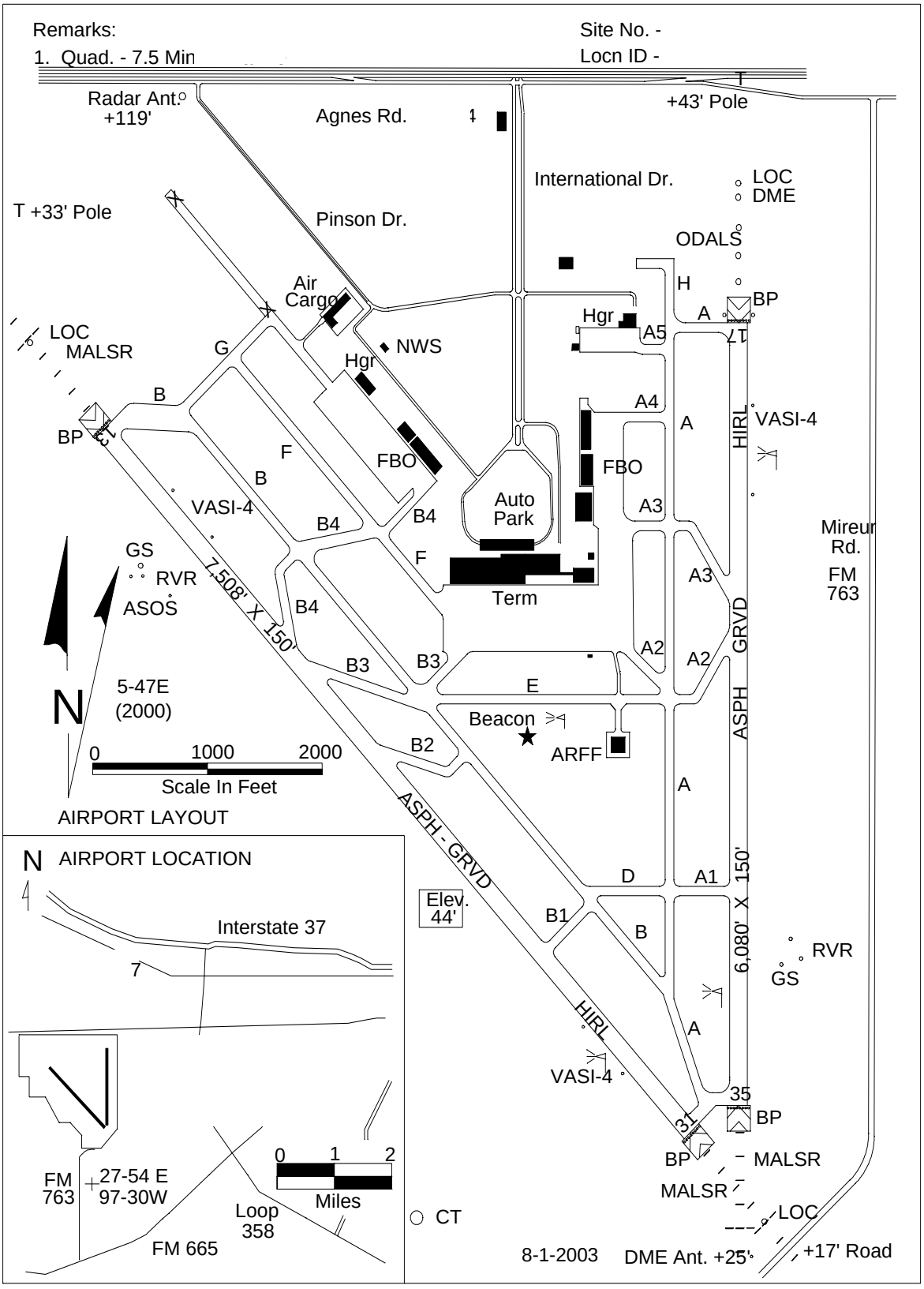
Remarks:
1. Quad. - 7.5 Min
Site No. -
Locn ID -
Radar Ant.
+119'
Agnes Rd.
+43' Pole
International Dr.
LOC
DME
T +33' Pole
Pinson Dr.
ODALS
Air Cargo
H
BP
A
Hgr
A5
LOC
MALSR
G
NWS
Hgr
B
A4
BP
F
FBO
A
HIRL
VASI-4
B
FBO
VASI-4
Auto Park
A3
B4
B4
Mireur Rd.
FM 763
GS
F
RVR
A3
7,508' X 150'
ASOS
Term
B4
GRVD
A2
A2
B3
B3
E
5-47E
(2000)
N
Beacon
ARFF
B2
ASPH
0
1000
2000
Scale In Feet
A
AIRPORT LAYOUT
ASPH - GRVD
N
AIRPORT LOCATION
D
A1
150'
Elev.
44'
B1
Interstate 37
B
6,080' X
RVR
7
GS
HIRL
A
VASI-4
35
BP
31
BP
MALSR
MALSR
LOC
0
1
2
Miles
FM
763
27-54 E
97-30W
Loop
358
CT
FM 665
8-1-2003
DME Ant. +25'
+17' Road

APPENDIX 4

SPECIAL INSPECTION CHECKLIST

√ Satisfactory

DATE: _____ DAY: _____ X Unsatisfactory

TIME: _____ INSPECTOR: _____

FACILITIES	CONDITIONS	√	REMARKS/ACTIONS TAKEN
Pavement Areas	Ponding/Edge Dams		
Markings And Signs	Visible after rain		
	Standards after Construction		
Safety Areas	Drainage		
	Reopening Runways		
	Reopening Taxiways		
Snow and Ice	Surface conditions		
	Snowbank clearance		
	Lights & Signs Obscured		
	FOD		
	Braking Action/MU Reports		
Construction	Barricades		
	Construction Lights		
	Equipment Parking		
SMGCS	SMGCS Lighting		

Additional Remarks

Airfield Map on Reverse Side

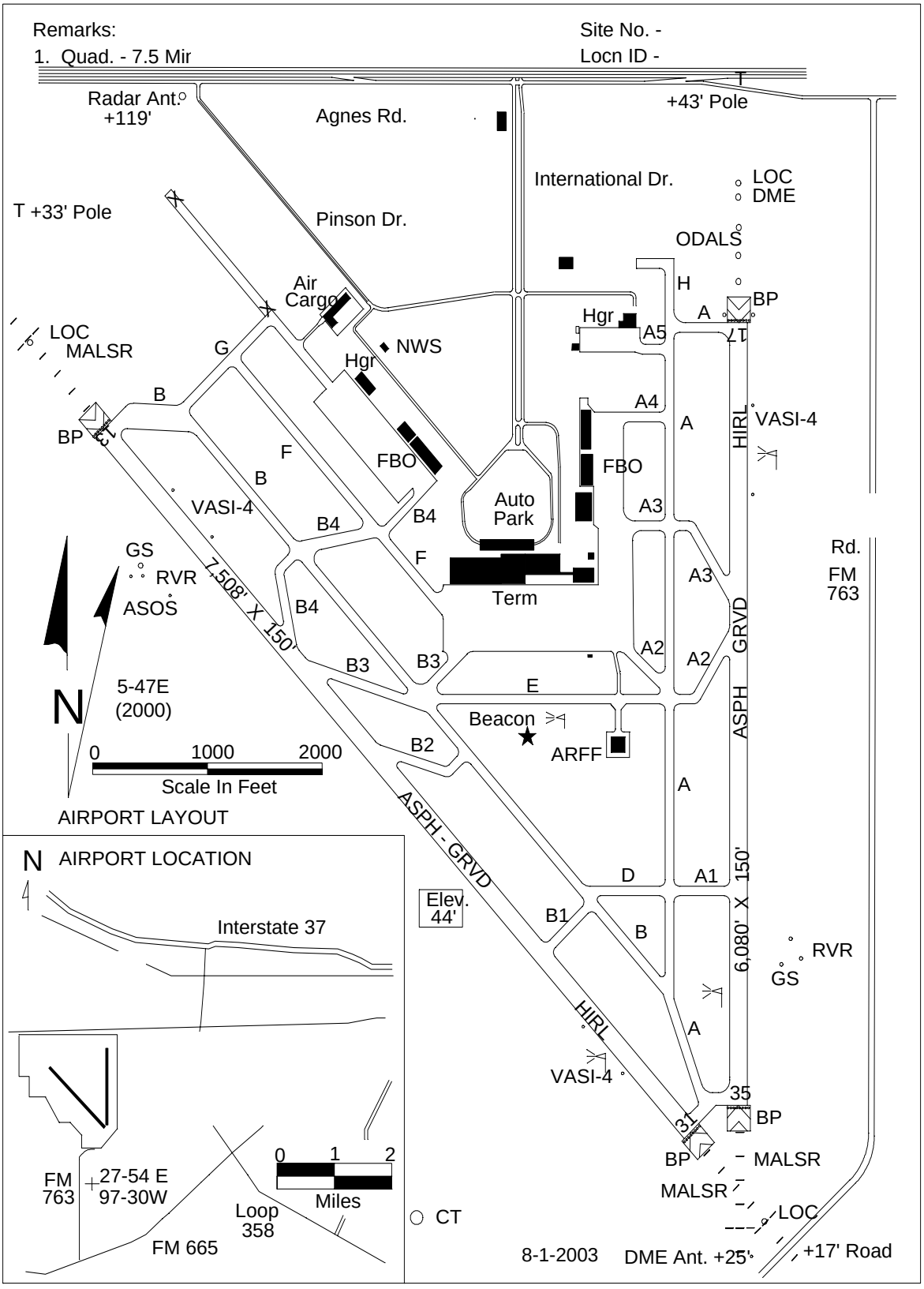
Remarks:
1. Quad. - 7.5 Mir
Site No. -
Locn ID -
Radar Ant.
+119'
Agnes Rd.
+43' Pole
International Dr.
LOC
DME
T +33' Pole
Pinson Dr.
ODALS
Air
Cargo
H
BP
A
Hgr
A5
LOC
MALSR
G
NWS
Hgr
B
A4
BP
A
HIRL
VASI-4
F
FBO
FBO
B
Auto
Park
VASI-4
B4
B4
A3
GS
RVR
F
A3
Rd.
FM
763
7,508' X 150'
ASOS
Term
B4
GRVD
A2
A2
B3
B3
E
N
5-47E
(2000)
Beacon
ARFF
B2
ASPH
0
1000
2000
Scale In Feet
A
AIRPORT LAYOUT
ASPH - GRVD
N
AIRPORT LOCATION
D
A1
150'
Elev.
44'
B1
Interstate 37
B
6,080' X
RVR
GS
HIRL
A
VASI-4
35
BP
31
BP
MALSR
MALSR
LOC
0
1
2
FM
763
27-54 E
97-30W
Miles
Loop
358
CT
FM 665
8-1-2003
DME Ant. +25'
+17' Road

APPENDIX 5A

QUARTERLY INSPECTION – MOBILE FUELERS

Inspector: _____ Fueling Agent: _____ Date: _____

S – Satisfactory U – Unsatisfactory R – Remark Below	Jet A Fuelers			100LL Fuelers			Other Fueler		
	S	U	R	S	U	R	S	U	R
No Smoking sign in cab									
Flammability Signs/Haz Mat Placards all sides									
Bonding Cables and Clips functional									
Deadman Control for all nozzles									
2 Fire Extinguishers – Proper type/Inspected									
Emergency Shutoffs operable and marked									
No Fuel Leaks – Hoses/Gaskets/Valves									
Vehicle Exhaust System – Shielded/Leak free									
No evidence of Smoking – No ashtray in cab									
Vehicle Parking – 10' apart/50' from buildings.									
Explosion proof electrical/Light lens intact									
Ignition Sources (Clothing, Shoes, Matches)									
							No of Mobile Fuelers		
Proper Fueling Procedures Observed							Jet A _____		
Fueling Personnel Meet Training Requirements							100 LL _____		
Fueling Personnel Training Records maintained							Other _____		

Remarks:_____

Page Intentionally Blank

APPENDIX 5B

QUARTERLY INSPECTION – FUEL STORAGE AREAS

Inspector: _____ Fueling Agent: _____ Date: _____

S – Satisfactory U – Unsatisfactory R – Remark Below	Jet A Section			100LL Section			Other _____		
	S	U	R	S	U	R	S	U	R
Fencing/Locks/Signs									
Piping protected from vehicles									
No Smoking signs posted									
Deadman Controls for loading stations									
2 Fire Extinguishers – Inspected/Accessible									
Boldly Marked Emergency Cutoffs – Location									
No Fuel Leaks									
Bonding wire/clips at loading stations/operable									
Piping/Pumps bonded and grounded									
No vegetation or materials to spread fire									
No evidence of Smoking									
Hoses in good condition									
Explosion Proof Electrical Equipment									

Remarks:_____

APPENDIX D

AIRSPACE EXHIBIT

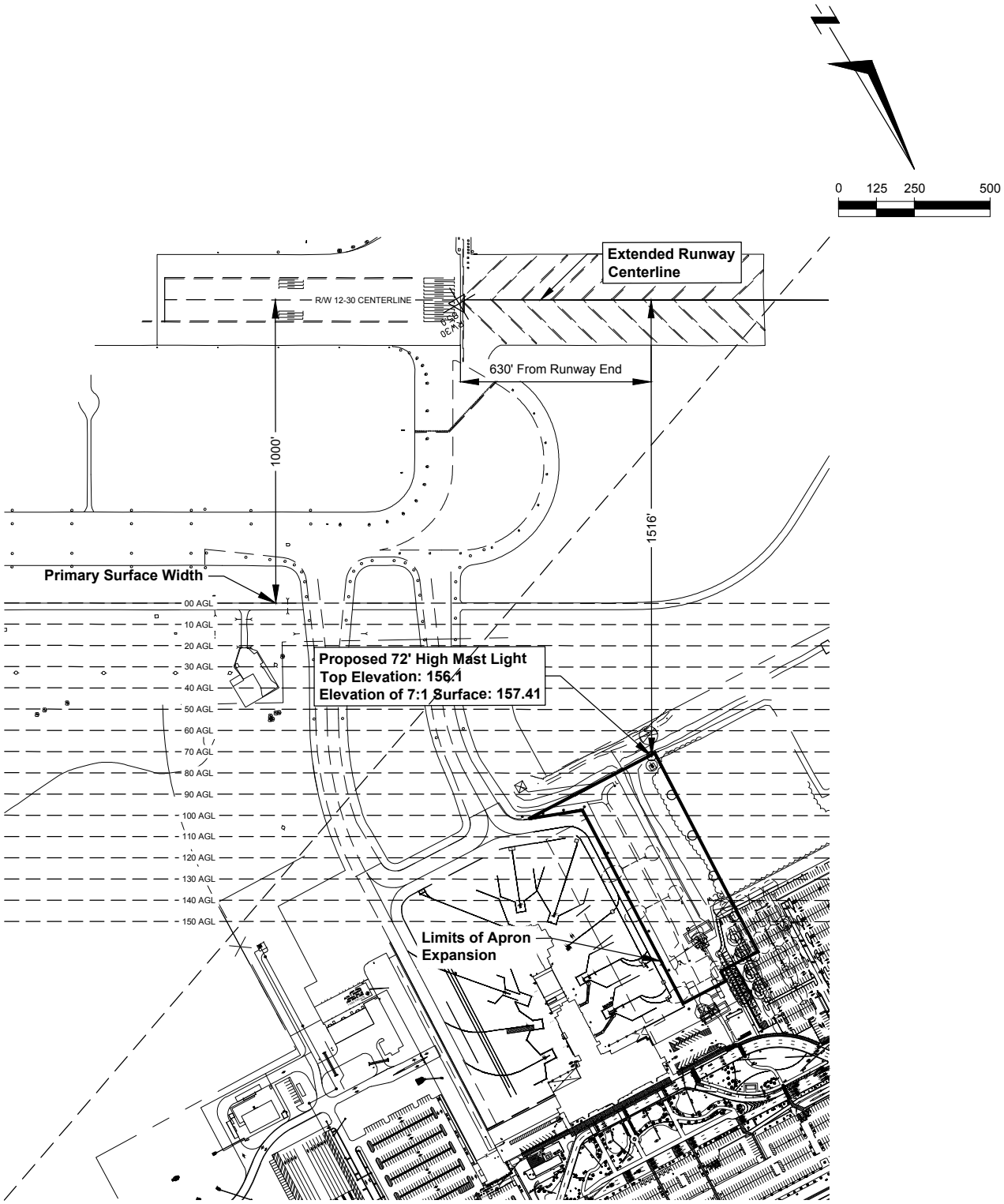

APPENDIX D

AIRSPACE EXHIBIT

APPENDIX E

CONSTRUCTION PLAN SHEETS:

G1.1	PROJECT LAYOUT PLAN
G1.2	OVERALL SITE PLAN
G1.3	GENERAL NOTES
G3.0	CONSTRUCTION SAFETY & PHASING SCHEDULE
G3.1 – G3.3	CONSTRUCTION SAFETY & PHASING PLANS
G3.4	CONSTRUCTION SAFETY & PHASING DETAILS

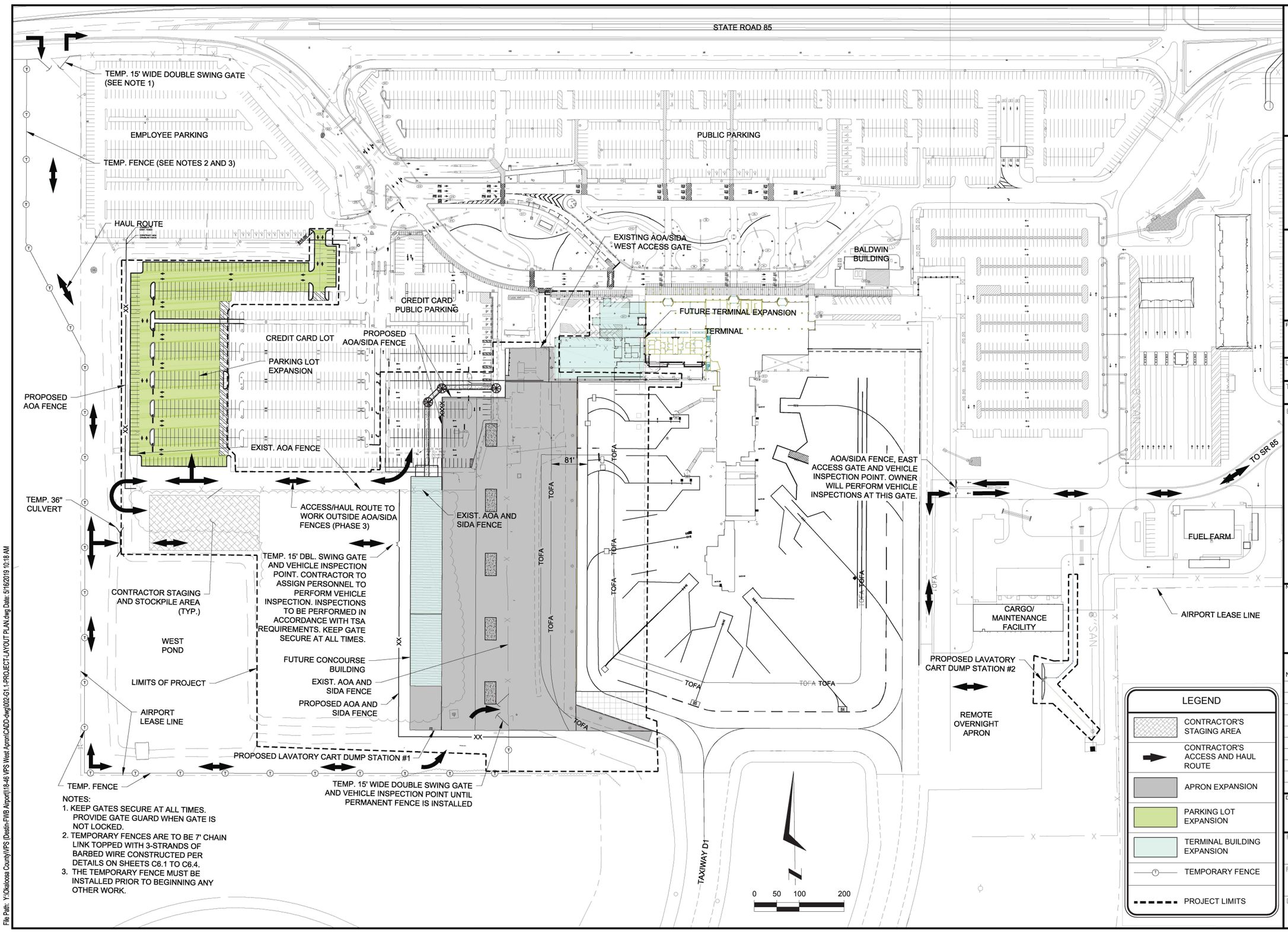

NOTES:
1. KEEP GATES SECURE AT ALL TIMES. PROVIDE GATE GUARD WHEN GATE IS NOT LOCKED.
2. TEMPORARY FENCES ARE TO BE 7' CHAIN LINK TOPPED WITH 3-STRANDS OF BARBED WIRE CONSTRUCTED PER DETAILS ON SHEETS C6.1 TO C6.4.
3. THE TEMPORARY FENCE MUST BE INSTALLED PRIOR TO BEGINNING ANY OTHER WORK.

LEGEND

- CONTRACTOR'S STAGING AREA
- CONTRACTOR'S ACCESS AND HAUL ROUTE
- APRON EXPANSION
- PARKING LOT EXPANSION
- TERMINAL BUILDING EXPANSION
- TEMPORARY FENCE
- PROJECT LIMITS

DESTIN - FORT WALTON BEACH AIRPORT

OKALOOSA COUNTY

INFRASTRUCTURE CONSULTING & ENGINEERING
5550 WEST IDLEWILD AVE. SUITE 102
TAMPA, FLORIDA 33634 (813) 330-2701
CERTIFICATE OF AUTHORIZATION NO.: 30862

Project Name:
CONSTRUCT WEST APRON EXPANSION AND INFRASTRUCTURE AT VPS

Designer:	Checked by:
HJ	JNG
Technician:	ICE Proj. No.:
MA	18-46

Engineer of Record:

Notes:

REVISIONS

No.	Description	Date	By

Drawing Name:
PROJECT LAYOUT PLAN

FAA A.I.P. Project No.:
3-12-0081-029-2018

FDOT Project No.:

Date:	Sheet Number:
MAY 2019	G1.1

File Path: Y:\Okaloosa County\VPS (Destin-FWB Airport)\18-46 VPS West Apron\CADD-dwg\002-G1.1-PROJECT-LAYOUT PLAN.dwg Date: 5/16/2019 10:18 AM

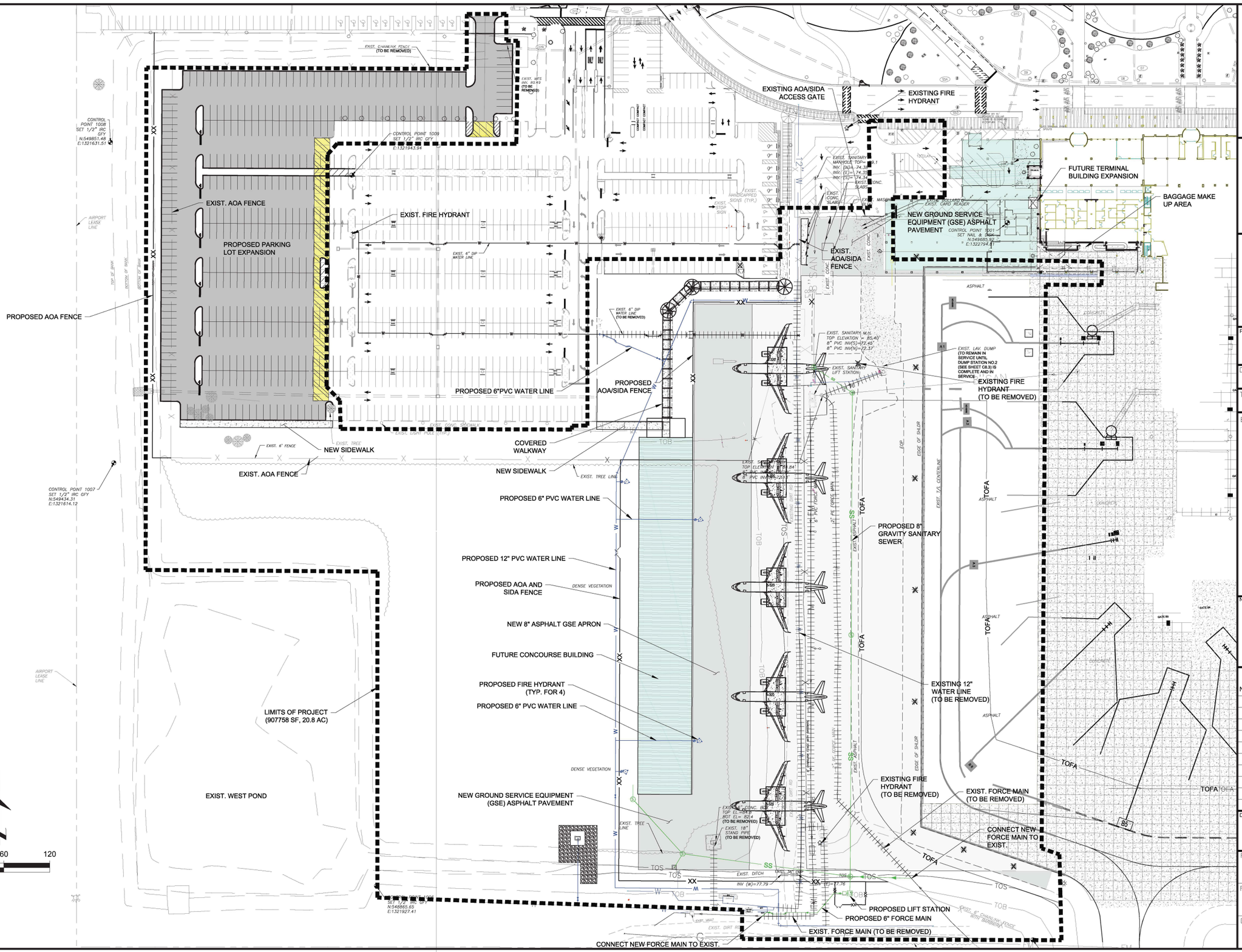

FLY VPS

DESTIN - FORT WALTON BEACH AIRPORT

OKALOOSA COUNTY

INFRASTRUCTURE CONSULTING & ENGINEERING
5550 WEST IDLEWILD AVE. SUITE 102
TAMPA, FLORIDA 33634 (813) 330-2701
CERTIFICATE OF AUTHORIZATION NO.: 30862

Project Name:
CONSTRUCT WEST APRON EXPANSION AND INFRASTRUCTURE AT VPS

Designer:	Checked by:
HJ	JNG
Technician:	ICE Proj. No.:
MA	18-46

Engineer of Record:

Notes:

REVISIONS

No.	Description	Date	By

Drawing Name:
OVERALL SITE PLAN

FAA A.I.P. Project No.:
3-12-0081-029-2018

FDOT Project No.:

Date:	Sheet Number:
MAY 2019	G1.2

File Path: Y:\Okaloosa County\VPS (Destin-FWB Airport)\18-46 VPS West Apron\CADD-dwg\003-G1.2-OVERALL SITE PLAN.dwg Date: 5/17/2019 4:15 PM

GENERAL NOTES

1. EACH CONTRACTOR SHALL OBTAIN, HAVE KNOWLEDGE OF, AND INCORPORATE THE FOLLOWING SAFETY PROVISIONS INTO THE CONSTRUCTION PROJECT:
   ~ OPERATIONAL SAFETY ON AIRPORTS DURING CONSTRUCTION - AC 150/5370-2G
   ~ AIRPORT SAFETY SELF-INSPECTION - AC 150/5200-18C
   ~ PAINTING, MARKING, AND LIGHTING OF VEHICLES USED ON AN AIRPORT - AC 150/5210-5D
   ~ FEDERAL AVIATION REGULATIONS, PART 139

2. FOR OTHER CONDITIONS RELATING TO SAFETY, SEE SPECIFICATIONS.

3. NOTICE TO AIRMEN (NOTAMS) - THE CONTRACTOR WILL PROVIDE THE NECESSARY INFORMATION ON CONSTRUCTION CONDITIONS (PAVEMENT CLOSURE, TIE-INS, ETC.) TO THE OWNER A MINIMUM OF SEVEN (7) DAYS PRIOR SO THAT A NOTAM CAN BE ISSUED IN ACCORDANCE WITH ESTABLISHED CRITERIA BY THE OWNER TO THE F.A.A. FLIGHT SERVICE STATION.

4. CONSTRUCTION STAKE-OUT SHALL BE PERFORMED BY CONTRACTOR IN ACCORDANCE WITH ARTICLE 50-06 OF THE GENERAL PROVISIONS OF THE CONTRACT DOCUMENTS. IT SHALL BE THE RESPONSIBILITY OF THE CONTRACTOR TO PROVIDE ALL MEASUREMENTS THAT MAY BE REQUIRED TO LAY OUT THE CONSTRUCTION. THE COST OF STAKING WILL NOT BE PAID FOR DIRECTLY AND SHALL BE INCLUDED IN THE UNIT PRICES FOR THE VARIOUS ITEMS OF WORK.

5. THE CONTRACTOR WILL BE RESPONSIBLE FOR THE CLEANUP AND DISPOSAL OF ALL TRASH AND DEBRIS CREATED BY HIS WORK OR PERSONNEL. NO BURNING IS ALLOWED ON SITE. ALL TRASH AND DEBRIS MUST BE DISPOSED OF OFFSITE. DEBRIS, WASTE AND LOOSE MATERIAL CAPABLE OF CAUSING DAMAGE TO AIRCRAFT LANDING GEAR, PROPELLERS OR BEING INGESTED IN JET ENGINES SHALL NOT BE ALLOWED ON ACTIVE AIRCRAFT MOVEMENT AREAS. IF THESE MATERIALS ARE OBSERVED TO BE ON ACTIVE AIRCRAFT MOVEMENT AREAS, THEY WILL BE REMOVED IMMEDIATELY AND/OR CONTINUOUSLY DURING CONSTRUCTION BY THE CONTRACTOR.

6. THE CONTRACTOR SHALL MAKE HIS OWN ARRANGEMENTS FOR ASPHALT AND OR CONCRETE BATCH PLANT LOCATIONS WHICH MUST BE LOCATED OFF AIRPORT PROPERTY.

7. THE CONTRACTOR SHALL VISIT SITE TO DETERMINE EXISTING CONDITIONS PRIOR TO SUBMITTING BID. THE CONTRACTOR SHALL REPORT TO THE ENGINEER ANY VARIATIONS FROM THE INFORMATION SHOWN ON THE CONSTRUCTION PLANS.

8. APPROVED CUTS IN PAVEMENT OR CONCRETE SHALL BE MADE USING A PAVEMENT SAW, AND SHALL BE PATCHED TO MATCH THE EXISTING SURFACE IN A MANNER APPROVED BY THE ENGINEER.

9. EXISTING EASEMENTS TO OTHER PROPERTIES SHALL BE MAINTAINED AT ALL TIMES.

10. AIRFIELD PAVEMENTS SHALL BE KEPT FREE OF ALL DEBRIS, DIRT, ETC., AT ALL TIMES. ANY SPILLAGE OF EXCAVATION OR OTHER MATERIAL SHALL BE CLEANED UP IMMEDIATELY BY THE CONTRACTOR WITH A MOTOR DRIVEN SWEEPER OR VACUUM AS REQUIRED BY THE ENGINEER. A PROGRAM OF REGULAR AIRFIELD PAVEMENT INSPECTION WILL BE PLANNED BY THE CONTRACTOR, AIRPORT OPERATIONS AND THE OWNER'S REPRESENTATIVE. SWEEPERS ARE TO BE EQUIPPED WITH NON-METALIC BROOMS.

11. ALL NON-PAVED AREAS OUTSIDE THE LIMITS OF CONSTRUCTION WHICH ARE DISTURBED BY THE CONTRACTOR'S OPERATIONS, SUCH AS THE CONTRACTOR'S ACCESS ROAD, STAGING AREA, HAUL ROUTES, ETC., SHALL BE RESTORED TO THEIR ORIGINAL CONDITION AND GRASSED PER FDOT SPECIFICATION SECTION 570 UPON COMPLETION OF THE PROJECT.

12. ANY DAMAGES DONE TO AIRPORT PROPERTY OR UTILITIES (SUCH AS RUNWAY, TAXIWAYS, APRONS, FENCING, EXISTING CABLES) WILL BE REPAIRED BY THE CONTRACTOR TO THE APPROVAL OF THE OWNER OF THE FACILITY IN A SATISFACTORY MANNER. THE CONTRACTOR WILL BEAR ALL COSTS FOR REPAIRS.

13. THE CONTRACTOR SHALL MAINTAIN SECURITY WITHIN THE PROJECT SITE AT ALL TIMES. NO UNAUTHORIZED PERSONNEL SHALL BE ALLOWED ON THE SITE.

14. CONTRACTOR SHALL MAINTAIN ALL AIRFIELD SAFETY DEVICES SUCH AS STAKED LIMIT LINES, FOR THE DURATION OF THE PROJECT AS REQUIRED. DAMAGED STAKES OR FLAGGING SHALL BE REPLACED IMMEDIATELY. CONTRACTOR TO SUBMIT PLAN SHOWING LOCATION OF LIMIT LINES FOR EACH PHASE AND FOR PROJECT DURATION TO THE ENGINEER FOR APPROVAL.

15. THE CONTRACTOR SHALL OBTAIN ALL PERMITS NECESSARY FOR THE COMPLETION OF THIS PROJECT.

16. THE CONTRACTOR IS RESPONSIBLE FOR COMPLIANCE WITH ALL ENVIRONMENTAL RULES AND REGULATIONS OF THE CITY, COUNTY, STATE, ARMY CORPS OF ENGINEERS, AND ANY OTHER JURISDICTIONAL AGENCIES, AND ALL CONDITIONS SET FORTH IN ENVIRONMENTAL PERMITS.

17. AIRCRAFT OPERATING ON THE AIRFIELD MAKE THE CONSTRUCTION AREA A ZONE OF HIGH LEVEL NOISE. THE CONTRACTOR IS ADVISED TO TAKE THE NECESSARY PRECAUTIONS, SUCH AS THE USE OF EAR PLUGS AND EAR MUFFS TO PREVENT EAR INJURY TO ANY PERSONNEL WORKING IN THE AREA.

18. ALL DISPUTES ARISING FROM THE CONTRACTOR SHALL BE DECIDED BY THE ENGINEER, WHOSE DECISION SHALL BE FINAL.

19. ALL DEMOLISHED MATERIALS BECOME THE PROPERTY OF THE CONTRACTOR UNLESS OTHERWISE SHOWN IN THE CONTRACT DOCUMENTS. CONSTRUCTION AND DEMOLITION DEBRIS SHALL BE LEGALLY DISPOSED OF OFF AIRPORT PROPERTY.

20. THE CONTRACTOR SHALL KEEP A WATER TRUCK ONSITE AT ALL TIMES FOR THE PURPOSE OF CONTROLLING DUST AS REQUIRED BY THE CONTRACT DOCUMENTS.

HAUL ROUTE / STAGING

21. THE CONTRACTOR WILL BE RESPONSIBLE FOR THE STORAGE AND SECURITY OF HIS MATERIAL AND EQUIPMENT AND SHALL ERECT STORAGE FACILITIES AND FENCING AS NECESSARY. THE CONTRACTOR'S STORAGE AND STAGING AREA SHALL BE IN THE LOCATION SHOWN ON DRAWING G1.1.

22. THE CONTRACTOR'S STAGING AREA(S) AND HAUL ROUTES SHOWN ON THE PLANS ARE GENERAL AND FOR INFORMATIONAL PURPOSES ONLY. THE ACTUAL SIZE AND LOCATION OF STAGING AREAS AND HAUL ROUTES WILL BE APPROVED BY THE OWNER PRIOR TO CONSTRUCTION.

23. CONTRACTOR WILL NOT BE ALLOWED TO USE ANY OF THE EXISTING RUNWAYS OR TAXIWAYS AS PART OF THE HAUL ROAD UNLESS SPECIFICALLY AUTHORIZED BY THE OWNER'S REPRESENTATIVE. UNDER NO CIRCUMSTANCE SHALL THE CONTRACTOR CROSS ANY RUNWAY AT ANY TIME WITH CONSTRUCTION VEHICLES OR EQUIPMENT.

24. ALL CONSTRUCTION TRAFFIC SHALL ENTER AND EXIT THE PROJECT AREA THROUGH THE PROJECT ACCESS ROUTES APPROVED BY THE ENGINEER ONLY. THE CONTRACTOR SHALL BE RESPONSIBLE FOR THE SECURITY OF ALL GATES HE USES FOR ACCESS ONTO AIRPORT PROPERTY. THE CONTRACTOR SHALL POST A GUARD AT ANY ACCESS GATE THAT IS NOT LOCKED.

25. THE EXISTING AIRPORT PAVEMENTS ACCESS ROADS AND HAUL ROUTES MAY NOT BE CAPABLE OF SUPPORTING CERTAIN TYPES OF CONSTRUCTION EQUIPMENT. PRIOR TO BIDDING, THE CONTRACTOR SHALL FULLY SATISFY HIMSELF AS TO THE ABILITY OF THE EXISTING AIRPORT PAVEMENTS TO SATISFACTORILY SUSTAIN THE TYPE OF EQUIPMENT HE PLANS TO USE. CONTRACTOR SHALL SIZE THE EQUIPMENT USED FOR CONSTRUCTION ACCORDINGLY. ANY DAMAGE CAUSED BY HAULING OR ANY OTHER CONSTRUCTION ACTIVITY TO EXISTING PAVEMENT SHALL BE REPAIRED BY THE CONTRACTOR AT NO ADDITIONAL COST TO THE OWNER.

26. THE OWNER'S REPRESENATIVE SHALL DESIGNATE AREAS TO BE USED BY THE CONTRACTOR FOR THE PARKING OF CONSTRUCTION EQUIPMENT AND VEHICLES WHEN NOT ENGAGED IN THE CONSTRUCTION DURING NON-WORKING DAYS AND NIGHTS AS WELL AS AREAS FOR CONTRACTOR'S EMPLOYEES AUTO PARKING.

27. THE CONTRACTOR IS RESPONSIBLE FOR COORDINATING AND PROVIDING ALL PERMANENT AND TEMPORARY UTILITY CONNECTIONS TO THE STAGING AREA.

MOVEMENT INSIDE AIRPORT OPERATIONS AREA (AOA)

28. AREAS OUTSIDE THE PROJECT LIMITS ARE DESIGNATED AS RESTRICTED AREAS. THE CONTRACTOR'S FORCES ARE PROHIBITED FROM ENTERING RESTRICTED AREAS AT ANY TIME, UNLESS SPECIFICALLY AUTHORIZED BY THE OWNER'S REPRESENTATIVE OR AIRPORT OPERATIONS.

29. THE CONTRACTOR SHALL CONDUCT HIS CONSTRUCTION OPERATIONS AS SHOWN ON THE CONSTRUCTION SAFETY & PHASING PLAN, AND HIS APPROVED PHASING PLAN. THE CONTRACTOR SHALL COORDINATE ALL CONSTRUCTION ACTIVITIES WITH THE OWNER'S REPRESENTATIVE TO MINIMIZE INTERFERENCE TO AIRCRAFT OPERATIONS DURING CONSTRUCTION.

30. CONTRACTOR SHALL REVIEW THE CONSTRUCTION SAFETY AND PHASING PLAN (CSPP) ATTACHED TO THE PROJECT SPECIFICATIONS. PRIOR TO THE PRE-CONSTRUCTION CONFERENCE, A SIGNED LETTER SHALL BE SUBMITTED TO THE OWNER INDICATING ACCEPTANCE OF ALL ELEMENTS OF THE CSPP. TITLE THE LETTER "SAFETY PLAN COMPLIANCE DOCUMENT"

31. NO CONTRACTOR VEHICLES, EQUIPMENT, OR PERSONNEL SHALL CROSS OR BE WITHIN ANY RUNWAY SAFETY AREA OR WITHIN ANY TAXIWAY OR TAXILANE OBJECT FREE AREA AS DELINEATED IN THE PLANS. THE CONTRACTOR SHALL NOT PARK OR LEAVE UNATTENDED ANY EQUIPMENT WITHIN THE RUNWAY OBJECT FREE AREA (ROFA) OR THE RUNWAY PROTECTION ZONE (RPZ). EQUIPMENT NOT MANNED AND BEING USED SHALL NOT BE ALLOWED WITHIN THE ROFA OR RPZ.

32. ALL VEHICLES USED ON THE AIRFIELD SHALL MEET FAA REQUIREMENTS FOR MARKINGS AND LIGHTING. (SEE AC 150/5210-5D).

33. ALL ACTIVE AIRPORT OPERATIONAL AREAS WHICH ARE ADJACENT TO A CONSTRUCTION WORK AREA SHALL BE SEPARATED BY TYPE II LOW PROFILE BARRICADES OR OTHER BARRIER APPROVED BY THE ENGINEER. NO CONSTRUCTION TRAFFIC WILL CROSS ACTIVE AIRPORT OPERATIONAL AREAS. THE CONTRACTOR SHALL PROVIDE AND INSTALL THE BARRIERS AS SHOWN ON THE DRAWINGS AND WHERE DIRECTED BY THE ENGINEER. SEE SPECIFICATION 01030 AND 01530 FOR ADDITIONAL INFORMATION.

34. THE CONTRACTOR SHALL WORK WITH THE ENGINEER IN SCHEDULING ALL TAXIWAY OPENINGS/CLOSINGS TO BE CONSISTENT WITH AIRFIELD OPERATIONS. WHEN THE CONTRACTOR'S OPERATIONS CROSS ACTIVE TAXIWAYS, HE SHALL BE REQUIRED TO PROVIDE A FLAGMAN ON EACH SIDE OF THE ACTIVE CROSSING TO DIRECT VEHICULAR TRAFFIC AND PROTECT AIRCRAFT TRAFFIC. THE CONTRACTOR SHALL ALSO HAVE SUITABLE EQUIPMENT APPROVED BY THE ENGINEER AT EACH CROSSING TO KEEP THE CROSSING CLEAN OF ALL DIRT AND DEBRIS AND SAFE FOR AIRCRAFT TRAFFIC.

35. ALL VEHICLES MUST BE INSPECTED BY AIRPORT POLICE PRIOR TO ENTERING AOA. ACCESS IS PROVIDED THROUGH CONTRACTOR'S PROPOSED TEMPORARY GATE.

36. ALL NON-RADIO EQUIPPED CONTRACTOR VEHICLES THAT ARE REQUIRED TO OPERATE ON OR ACROSS ACTIVE RUNWAYS, TAXIWAYS, APRONS AND RUNWAY APPROACH AND PROTECTION ZONES SHALL DO SO UNDER THE DIRECT CONTROL OF A RADIO EQUIPPED ESCORT VEHICLE OPERATED BY BADGED PERSONNEL ONLY. EQUIPPED VEHICLES SHALL MONITOR GROUND CONTROL FREQUENCY 121.8 MHZ. ALL AIRCRAFT TRAFFIC ON RUNWAYS, TAXIWAYS AND APRONS SHALL HAVE PRIORITY OVER CONTRACTOR'S TRAFFIC.

BURIED UTILITIES

37. PRIOR TO DIGGING ANY TRENCHES, THE CONTRACTOR SHALL NOTIFY ALL UTILITIES (ELECTRIC, GAS, TELEPHONE, WATER, SEWER) AND OBTAIN LOCATIONS OF UNDERGROUND UTILITIES.

38. CONTRACTOR SHALL BE RESPONSIBLE FOR THE LOCATION AND IDENTIFICATION OF ALL EXISTING UTILITIES AND UNDERGROUND PIPELINES IN CONSTRUCTION AREA. ANY DAMAGES TO EXISTING UTILITIES OR UNDERGROUND PIPELINES ON OR OFF AIRPORT PROPERTY SHALL BE THE RESPONSIBILITY OF THE CONTRACTOR. ALL REPAIR WORK SHALL MEET THE APPROVAL OF THE OWNER OF THE DAMAGED UTILITY. NO REIMBURSEMENT WILL BE ALLOWED FOR UTILITY/PIPE REPAIR OR REPLACEMENT.

39. THE CONTRACTOR SHALL PROTECT EXISTING UTILITIES, AIRFIELD LIGHTING AND NAVAIDS NOT CALLED OUT TO BE REMOVED OR ABANDONED. ANY DAMAGES DONE TO AIRPORT PROPERTY OR UTILITIES (INCLUDING, BUT NOT LIMITED T0 RUNWAYS, TAXIWAYS, APRONS, FENCING, EXISTING CABLES, LIGHTING, SIGNS, NAVAIDS) WILL BE REPAIRED BY THE CONTRACTOR TO THE APPROVAL OF THE OWNER OF THE FACILITY IN A SATISFACTORY MANNER. THE CONTRACTOR WILL BEAR ALL COSTS FOR REPAIRS.

40. ANY UNPLANNED, UNAPPROVED, OR ACCIDENTAL SHUTDOWN OR INTERRUPTION OF SERVICE TO ANY LIGHTING CIRCUIT OR NAVIGATIONAL AID REQUIRES IMMEDIATE NOTIFICATION OF AIRPORT OPERATIONS AND THE OWNER'S REPRESENTATIVE BY THE CONTRACTOR. THE COST OF MATERIALS AND LABOR REQUIRED TO REPAIR THE LIGHTING CIRCUIT SHALL BE BORNE BY THE CONTRACTOR.

SECURITY NOTES

41. GENERAL INTENT: IT IS INTENDED THAT THE CONTRACTOR SHALL COMPLY WITH ALL REQUIREMENTS OF THE AIRPORT SECURITY PLAN AND WITH THE SECURITY REQUIREMENTS SPECIFIED HEREIN BY AIRPORT OPERATIONS. THE CONTRACTOR SHALL DESIGNATE TO THE ENGINEER AND AIRPORT OPERATIONS, IN WRITING, THE NAME OF HIS "CONTRACTOR SECURITY OFFICER (CSO)." THE CSO SHALL REPRESENT THE CONTRACTOR ON THE SECURITY REQUIREMENTS FOR THE CONTRACT.

42. CONTRACTOR PERSONNEL SECURITY ORIENTATION: THE CSO SHALL BE RESPONSIBLE FOR BRIEFING ALL CONTRACTOR AND SUBCONTRACTOR PERSONNEL ON SECURITY REQUIREMENTS. ALL NEW CONTRACTOR EMPLOYEES SHALL BE BRIEFED ON SECURITY REQUIREMENTS PRIOR TO WORKING IN THE CONSTRUCTION AREA.

43. ACCESS TO THE SITE: CONTRACTOR'S ACCESS TO THE SITE SHALL BE AS SHOWN ON THE SAFETY AND PHASING PLANS. NO OTHER ACCESS POINTS SHALL BE ALLOWED UNLESS APPROVED BY AIRPORT OPERATIONS. ALL CONTRACTOR TRAFFIC AUTHORIZED TO ENTER THE SITE SHALL BE EXPERIENCED IN THE ROUTE OR GUIDED BY CONTRACTOR PERSONNEL. THE CONTRACTOR SHALL BE RESPONSIBLE FOR TRAFFIC CONTROL TO AND FROM THE VARIOUS CONSTRUCTION AREAS ON THE SITE, THE CONTRACTOR SHALL NOT PERMIT ANY UNAUTHORIZED CONSTRUCTION PERSONNEL OR TRAFFIC ON THE SITE. ACCESS GATES TO THE SITE SHALL BE ATTENDED BY THE CONTRACTOR IF THE CONTRACTOR CHOOSES TO LEAVE ANY ACCESS GATE OPEN, IT SHALL BE ATTENDED BY BADGED CONTRACTOR PERSONNEL WHO ARE FAMILIAR WITH THE REQUIREMENTS OF THE AIRPORT OPERATIONS SECURITY PROGRAM. THE CONTRACTOR IS RESPONSIBLE FOR THE IMMEDIATE CLEANUP OF ANY DEBRIS DEPOSITED ALONG THE ACCESS ROUTE AS A RESULT OF HIS CONSTRUCTION TRAFFIC. DIRECTIONAL SIGNING FROM THE ACCESS GATE ALONG THE DELIVERY ROUTE TO THE STORAGE AREA, PLANT SITE OR WORK SITE SHALL BE DIRECTED BY AIRPORT OPERATIONS.

44. MATERIALS DELIVERY TO THE SITE: ALL CONTRACTOR'S MATERIAL ORDERS FOR DELIVERY TO THE WORK SITE WILL USE AS A DELIVERY ADDRESS, THE STREET NAME ASSIGNED TO THE ACCESS POINT AT THE CONTRACTOR'S STAGING SITE AT THE AIRPORT. THE NAME "DESTIN-FT.WALTON BEACH AIRPORT" SHALL NOT BE USED IN THE DELIVERY ADDRESS AT ANY TIME. THIS WILL PRECLUDE DELIVERY TRUCKS FROM ENTERING INTO THE TERMINAL COMPLEX, OR TAKING SHORT CUTS THROUGH THE PERIMETER GATES AND ENTERING INTO AIRCRAFT OPERATIONS AREA INAPPROPRIATELY.

45. CONSTRUCTION AREA LIMITS: THE LIMITS OF CONSTRUCTION, MATERIAL STORAGE AREAS, PLANT SITE, EQUIPMENT STORAGE AREA, PARKING AREA AND OTHER AREAS DEFINED AS REQUIRED FOR THE CONTRACTOR'S EXCLUSIVE USE DURING CONSTRUCTION SHALL BE MARKED BY THE CONTRACTOR. THE CONTRACTOR SHALL ERECT AND MAINTAIN AROUND THE PERIMETER OF THESE AREAS SUITABLE FENCING, MARKING AND/OR WARNING DEVICES VISIBLE FOR DAY/NIGHT USE. TEMPORARY BARRICADES, FLAGGING AND FLASHING WARNING LIGHTS WILL BE REQUIRED AT CRITICAL ACCESS POINTS. TYPE OF MARKING AND WARNING DEVICES SHALL BE APPROVED BY AIRPORT OPERATIONS. CONTRACTOR SHALL MAINTAIN ALL AIRFIELD SAFETY DEVICES SUCH AS STAKED LIMIT LINES AND BARRICADE LIGHTS FOR THE DURATION OF THE PROJECT AS REQUIRED. DAMAGED STAKES OR FLAGGING SHALL BE REPLACED IMMEDIATELY. CONTRACTOR TO SUBMIT PLAN SHOWING LOCATION OF LIMIT LINES FOR EACH PHASE AND FOR PROJECT DURATION TO THE ENGINEER FOR APPROVAL.

46. IDENTIFICATION-PERSONNEL: ALL EMPLOYEES, AGENTS VENDORS, INVITEES, ETC. OF THE CONTRACTOR OR SUBCONTRACTORS REQUIRING ACCESS TO THE AIR OPERATIONS AREA (AOA) SITE SHALL, IN ACCORDANCE WITH THE AIRPORT OPERATIONS SECURITY PROGRAM, BE REQUIRED TO DISPLAY DESTIN-FT. WALTON BEACH AIRPORT ISSUED IDENTIFICATION OR BE UNDER ESCORT BY PROPERLY BADGED PERSONNEL. CONTRACTORS SELECTED BADGE APPLICANTS MUST PASS FBI BACKROUND CHECKS. THERE IS A COST OF $60.00 PER APPLICANT FOR FBI BACKGROUND CHECK, FINGERPRINTING AND THE COST OF THE BADGE. BEFORE A BADGE IS ISSUED, EACH INDIVIDUAL MUST GO THROUGH SIDA TRAINING. THESE BADGES WILL BE IDENTIFIED NUMERICALLY AND ISSUED TO INDIVIDUAL EMPLOYEES WITH A PERMANENT RECORD MAINTAINED ON EACH INDIVIDUAL TO WHOM A BADGE IS ISSUED. AT THE COMPLETION OF THE CONTRACT ALL BADGES MUST BE RETURNED TO AIRPORT OPERATIONS OR A CHARGE OF $100.00 PER BADGE WILL BE ASSESSED FOR ALL BADGES NOT RETURNED. IDENTIFIABLE HARD HATS OR OTHER IDENTIFICATION SHALL ALSO BE WORN AT ALL TIMES IF REQUIRED BY AIRPORT OPERATIONS. THE PRIME CONTRACTOR SHALL BE RESPONSIBLE FOR BACKGROUND CHECKS ON ALL OF ITS OWN AND ALL SUBCONTRACTOR EMPLOYEES THE CONTRACTOR AND ITS STAFF IS RESPONSIBLE FOR ATTENDING TRAINING AND COMPLETING SECURITY BADGE APPLICATIONS. ESTIMATED TIME FOR COMPLETION IS 2 HOURS. FINGERPRINTING WOULD BE DONE ON THE APPLICANT'S FIRST VISIT TO THE AIRPORT. AFTER RESULTS OF FINGERPRINT BASED BACKGROUND CHECKS ARE APPROVED THE APPLICANT WOULD NEED TO RETURN TO THE AIRPORT FOR THE 2 HOUR SIDA TEST. FINGERPRINTING MUST BE DONE BY VPS. CERTIFICATES FOR BACKGROUND CHECKS DONE AT OTHER AIRPORTS WILL NOT BE ACCEPTED.

47. IDENTIFICATION-VEHICLES: THE CONTRACTOR, THROUGH THE CSO, SHALL ESTABLISH AND MAINTAIN A LIST OF CONTRACTOR AND SUBCONTRACTOR VEHICLES AUTHORIZED TO OPERATE ON THE SITE AND SHALL ISSUE A PERMIT TO EACH VEHICLE TO BE MADE AVAILABLE UPON REQUEST BY AIRPORT OPERATIONS THE RESIDENT PROJECT REPRESENTATIVE OR ANY AUTHORIZED AIRPORT REPRESENTATIVES. A BLOCK OF VEHICLE PERMITS SHALL BE ISSUED BY AIRPORT OPERATIONS TO THE CONTRACTOR AND AT THE COMPLETION OF THE CONTRACT ALL PERMITS WILL BE RETURNED TO AIRPORT OPERATIONS. IN LIEU OF ISSUING INDIVIDUAL VEHICLE PERMITS, THE CSO CAN REQUIRE EACH VEHICLE TO DISPLAY A LARGE COMPANY SIGN ON BOTH SIDES OF THE VEHICLE AND ADVISE AIRPORT OPERATIONS AND SECURITY OF A CURRENT LIST OF COMPANIES AUTHORIZED TO ENTER AND CONDUCT WORK ON THE AIRPORT. CONTRACTOR EMPLOYEE VEHICLES SHALL BE RESTRICTED TO THE CONTRACTOR'S EMPLOYEE PARKING AREA AND ARE NOT ALLOWED ON THE AOA AT ANY TIME.

48. FINES: PAYMENT OF ALL FINES ASSESSED TO DESTIN-FT. WALTON BEACH AIRPORT DUE TO VIOLATIONS BY THE CONTRACTOR OF FAA SECURITY OR SAFETY REQUIREMENTS SHALL BE THE SOLE RESPONSIBILITY OF THE CONTRACTOR. AIRPORT OPERATIONS PERSONEL DO ISSUE SIDA VIOLATIONS FOR INFRACTIONS BY AN INDIVIDUAL, WHICH CAN RESULT IN REVOCATION OF THE BADGE AND POSSIBLE TSA FINES.

49. AREAS OUTSIDE THE PROJECT LIMITS ARE DESIGNATED AS RESTRICTED AREAS. THE CONTRACTOR'S FORCES ARE PROHIBITED FROM ENTERING RESTRICTED AREAS AT ANY TIME, UNLESS SPECIFICALLY AUTHORIZED BY THE ENGINEER OR AIRPORT OPERATIONS.

QUALITY CONTROL PLAN

50. QUALITY CONTROL PLAN: WITHIN 10 DAYS OF NOTIFICATION OF INTENT TO AWARD, THE CONTRACTOR SHALL SUBMIT SEVEN (7) COPIES OF A WRITTEN QUALITY CONTROL PLAN. THE CONTRACTOR SHALL DESIGNATE A QUALITY CONTROL OFFICER RESPONSIBLE FOR THE QUALITY OF CONSTRUCTION AND SHALL INCLUDE AN ORGANIZATIONAL CHART DESIGNATING QUALITY CONTROL RESPONSIBILITIES. THE PLAN SHALL ENCOMPASS A PROGRAM OF QUALITY CONTROL ACTIVITIES FOR THE PROJECT AS A WHOLE, AS WELL AS SPECIFIED PROCEDURES FOR EACH ELEMENT OF WORK. FOR EACH MAJOR ELEMENT OF WORK, THE CONTRACTOR SHALL DESCRIBE IN THE QUALITY CONTROL PLAN PRELIMINARY INSPECTION PROCEDURES TO BE ACCOMPLISHED PRIOR TO START UP, PROGRESS INSPECTION PROCEDURES TO MONITOR THE WORK IN PROGRESS, AS WELL AS FINAL INSPECTIONS TO VERIFY ALL TESTS HAVE BEEN PERFORMED AND ARE PASSING, AND ALL CONDITIONS OF THE SPECIFICATIONS HAVE BEEN MET. FOR ADDITIONAL QUALITY CONTROL REQUIREMENTS, REFER TO SECTION 100 OF THE GENERAL PROVISIONS.

UTILITY CONTACT INFORMATION:

ORGANIZATION	NAME	PHONE
GULF POWER	CHAD FOUNTAIN	(850) 224-4780
COX COMMUNICATIONS	ROGER DIXON	(850 664-3763
OKALOOSA WATER AND SEWER	GABBY ARCEO	(850) 651-7504
EGLIN WATER AND SEWER (ASUS)	JASON DRAYER	(850) 324-2595
OKALOOSA GAS DISTRICT	ESSA RHEBI	(850) 729-4864

FLY VPS

DESTIN - FORT WALTON BEACH AIRPORT

OKALOOSA COUNTY

INFRASTRUCTURE CONSULTING & ENGINEERING
5550 WEST IDLEWILD AVE. SUITE 102
TAMPA, FLORIDA 33634 (813) 330-2701
CERTIFICATE OF AUTHORIZATION NO.: 30862

Project Name:
CONSTRUCT WEST APRON EXPANSION AND INFRASTRUCTURE AT VPS

Designer:	Checked by:
HJ	JNG
Technician:	IC: Proj. No.:
MA	18-46

Engineer of Record:

Notes:

REVISIONS

No.	Description	Date	By

Drawing Name:
GENERAL NOTES

FAA A.I.P. Project .:
3-12-0081-029-2018

FDOT Project .:

Date:	Sheet Number:
MAY 2019	G1.3

Construction Schedule

ACTIVITY	DURATION (calendar days from NTP)
Construction	
Phase 1 Expansion of Credit Card Parking Lot (West and North)	120
Phase 2 Clear trees, Construct water, sewer and lift station. Apron storm drainage.	350
Phase 3 Demo SE portion of credit card lot. Complete waterline construction. Construct canopies/ walkways	
Phase 4 Construct all apron pavement (concrete and asphalt).	
Substantial Completion	350
Punch List	380

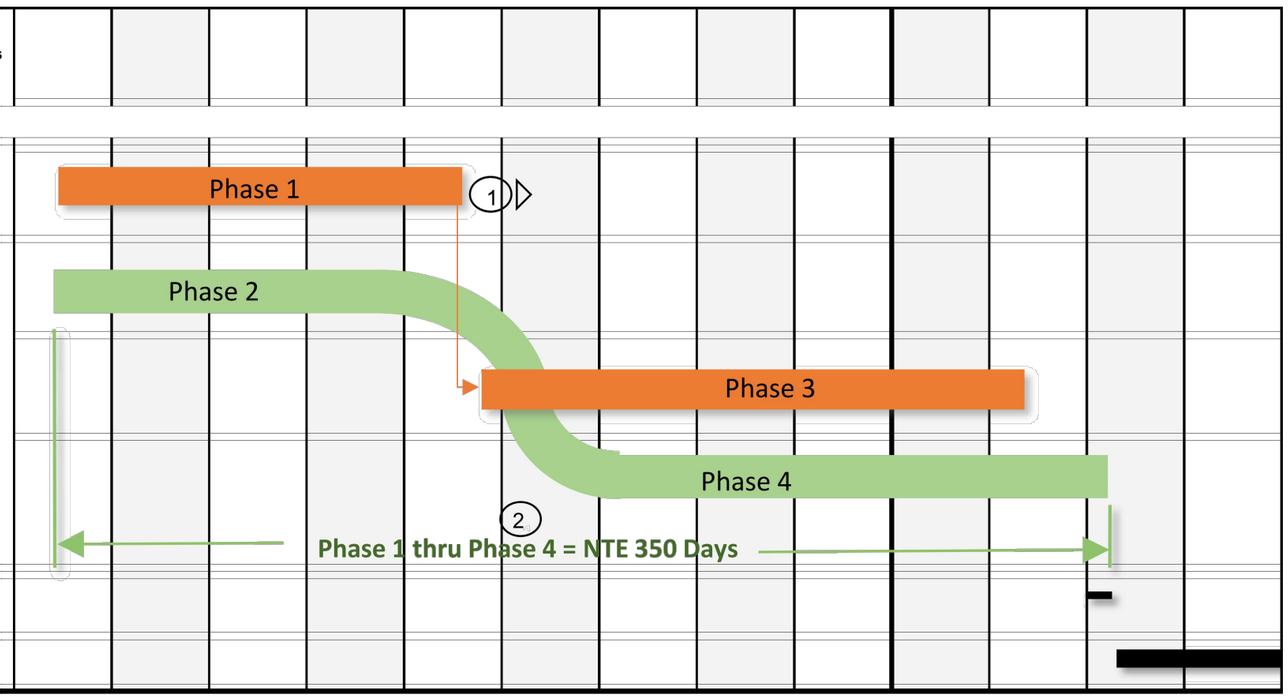

Total Phases 1-4 = 350

Total Contract Time (including punch list) = 380

Notes:

1) Additional Spaces for Credit Card lot become available

2) Liquidated Damages (LD's) as specified in the contract documents, will be assessed for failure to complete the following phases and milestones:

Phase 1 = 120 days from Notice to Proceed

Total Contract = 350 Days from NTP.

Punch List = 30 Days

PROJECT EARTH WORK SUMMARY			
	TOPSOIL STRIPPING	EXCAVATION	EMBANKMENT IN PLACE
CREDIT CARD PARKING LOT (PHASE I)	1,795 C.Y.	2,080 C.Y.	5,300 C.Y.
OUTSIDE OF EXISTING SIDA FENCE (PHASE II)		5,850 C.Y.	3,840 C.Y.
TOTAL PROJECT EARTH WORK	4,865 C.Y.	16,815 C.Y.	10,080 C.Y.

NOTE:
STRIPPING AND EXCAVATION QUANTITIES ARE MEASURED IN THEIR ORIGINAL POSITION AT THE JOB SITE.

FLY VPS

DESTIN - FORT WALTON BEACH AIRPORT

OKALOOSA COUNTY

INFRASTRUCTURE CONSULTING & ENGINEERING
5550 WEST IDLEWILD AVE. SUITE 102
TAMPA, FLORIDA 33634 (813) 330-2701
CERTIFICATE OF AUTHORIZATION NO.: 30862

Project Name:
CONSTRUCT WEST APRON EXPANSION AND INFRASTRUCTURE AT VPS

Designer:	Checked by:
HJ	JNG
Technician:	ICE Proj. No.:
MA	18-46

Engineer of Record:

Notes:

REVISIONS

No.	Description	Date	By

Drawing Name:
CONSTRUCTION SCHEDULE

FAA A.I.P. Project No.:
3-12-0081-029-2018

FDOT Project No.:

Date:	Sheet number:
MAY 2019	G3.0

SEE SHEET G1.1 FOR ENTRANCE OFF OF SR 85

0 30 60 120

PARKING LOT EXPANSION

INSTALL HIGH PROFILE BARRICADES

CREDIT CARD PUBLIC PARKING

INSTALL HIGH PROFILE BARRICADES

CONTRACTOR'S ACCESS AND HAUL ROUTE FOR PHASE 1

EXIST. WEST ACCESS GATE

TERMINAL

TEMP. FENCE TO BE INSTALLED PRIOR TO BEGINNING ANY OTHER WORK.

CONTRACTOR'S STAGING AND STOCK PILE AREA

INSTALL 15' DBL. SWING GATE FOR SIDA ACCESS AND VEHICLE INSPECTION POINT. VEHICLES MUST BE INSPECTED PRIOR TO ENTERING THE SIDA. CONTRACTOR TO ASSIGN PERSONNEL TO PERFORM VEHICLE INSPECTION. INSPECTIONS TO BE PERFORMED IN ACCORDANCE WITH TSA REQUIREMENTS. KEEP GATE SECURE AT ALL TIMES.

EXIST. LAVATORY CART DUMP STATION MUST REMAIN IN SERVICE UNTIL DUMP STATION NO.2 (SEE SHEET C8.3) HAS BEEN COMPLETED AND IS IN SERVICE.

EXIST. LIFT STATION , 2" AND 6" FORCE MAINS AND 12" WATER MAIN TO REMAIN IN SERVICE UNTIL WATER AND SANITARY SEWER RELOCATION WORK IS COMPLETE. SEE SHEETSC8.1 AND C8.2 FOR ADDITIONAL REQUIREMENTS

AOA/SIDA TO REMAIN SECURE AT ALL TIMES. EXISTING FENCE NOT TO BE REMOVED UNTIL NEW FENCE OR TEMPORARY FENCE HAS BEEN INSTALLED. SEE PHASE 3 ON SHEET G3.2.

INSTALL LOW PROFILE BARRICADES ALONG THE EDGE OF THE EXISTING TAXILANE PRIOR TO BEGINNING WORK IN THE TOFA AND LEAVE IN PLACE UNTIL PHASE 4 IS COMPLETE.

TEMP. 36" CULVERT (COST TO BE INCIDENTAL TO ITEM C-105-MOBILIZATION)

LIMITS OF PROJECT

TAXILANE OBJECT FREE AREA (TOFA) LIMIT. WORK IN THE TOFA CAN ONLY BE PERFORMED ON A PULL-BACK BASIS OR AT NIGHT. ALL PERSONNEL AND EQUIPMENT MUST PULL BACK OUTSIDE THE TOFA WHEN AN AIRCRAFT IS OPERATING ON THE TAXILANE.

PERMANENT AOA/SIDA FENCE

CONNECT TEMPORARY FENCE TO PERMANENT FENCE

CONNECT TEMPORARY FENCE TO EXIST. FENCE

INSTALL NEW 15' WIDE DBL. SWING GATE FOR SIDA ACESS AND VEHICLE INSPECTION POINT UNTIL PERMANENT FENCE IS INSTALLED

LEGEND

PHASE 1
WORK IN PHASE 1 CONSISTS OF:
CONSTRUCTION OF THE PARKING LOT EXPANSION INCLUDING THE RETAINING WALL, LIGHTING, SIGNAGE, LANDSCAPING, IRRIGATION AND PAVEMENT MARKING. **PRIOR TO BEGINNING ANY LAND DISTURBING ACTIVITIES IN PHASE I THE CONTRACTOR IS TO PERFORM A PRE-CONSTRUCTION SURVEY OF THE AREA WITHIN THE LIMITSOF GRADING FOR PHASE I AS PRESCRIBED IN PARAGRAPH 152-2.1 IN ITEM P-152.**

PHASE 2
WORK IN PHASE 2 CONSISTS OF:
CLEARING AND GRUBBING, ROUGH GRADING, DEMOLITION, WATER AND SANITARY SEWER RELOCATION WORK INCLUDING RELOCATION OF THE LIFT STATION. WORK IN PHASE 2 MAY BE PERFORMED CONCURRENTLY WITH PHASES 1 AND 3. EXISTING HIGH MAST LIGHTS NOT TO BE TAKEN OUT OF SERVICE UNTIL NEW HIGH MAST LIGHTS ARE INSTALLED AND OPERATIONAL.

PHASE 3
WORK IN PHASE 3 CONSISTS OF:
DEMOLITION OFTHE EXISTING PARKING LOT PAVEMENT, CONCRETE SIDEWALK AND CURB, CANOPY STRUCTURE, WATERLINE RELOCATION AND DEMOLITION AND UG ELECTRICAL DEMOLITION. PHASE 3 DEMOLITION CANNOT BEGIN UNTIL THE PHASE 1 PARKING LOT EXPANSION WORK IS COMPLETE AND READY FOR USE BY THE OWNER.

STAGING AREA

CONTRACTOR ACCESS/ HAUL ROUTE

File Path: Y:\Okaloosa County\VPS (Destin-FWB Airport)\18-46 VPS West Apron\CADD-dwg\007-G3.1-CONSTRUCTION SAFETY AND PHASING PLAN.dwg Date: 5/15/2019 2:40 PM

DESTIN - FORT WALTON BEACH AIRPORT

OKALOOSA COUNTY

INFRASTRUCTURE CONSULTING & ENGINEERING
5550 WEST IDLEWILD AVE. SUITE 102
TAMPA, FLORIDA 33634 (813) 330-2701
CERTIFICATE OF AUTHORIZATION NO.: 30862

Project Name:
CONSTRUCT WEST APRON EXPANSION AND INFRASTRUCTURE AT VPS

Designer:	Checked by:
HJ	JNG
Technician:	ICE Proj. No.:
MA	18-46

Engineer of Record:

Notes:

REVISIONS

No.	Description	Date	By

Drawing Name:
CONSTRUCTION SAFETY AND PHASING PLAN

FAA A.I.P. Project No.:
3-12-0081-029-2018

FDOT Project No.:

Date:	Sheet Number:
MAY 2019	G3.1

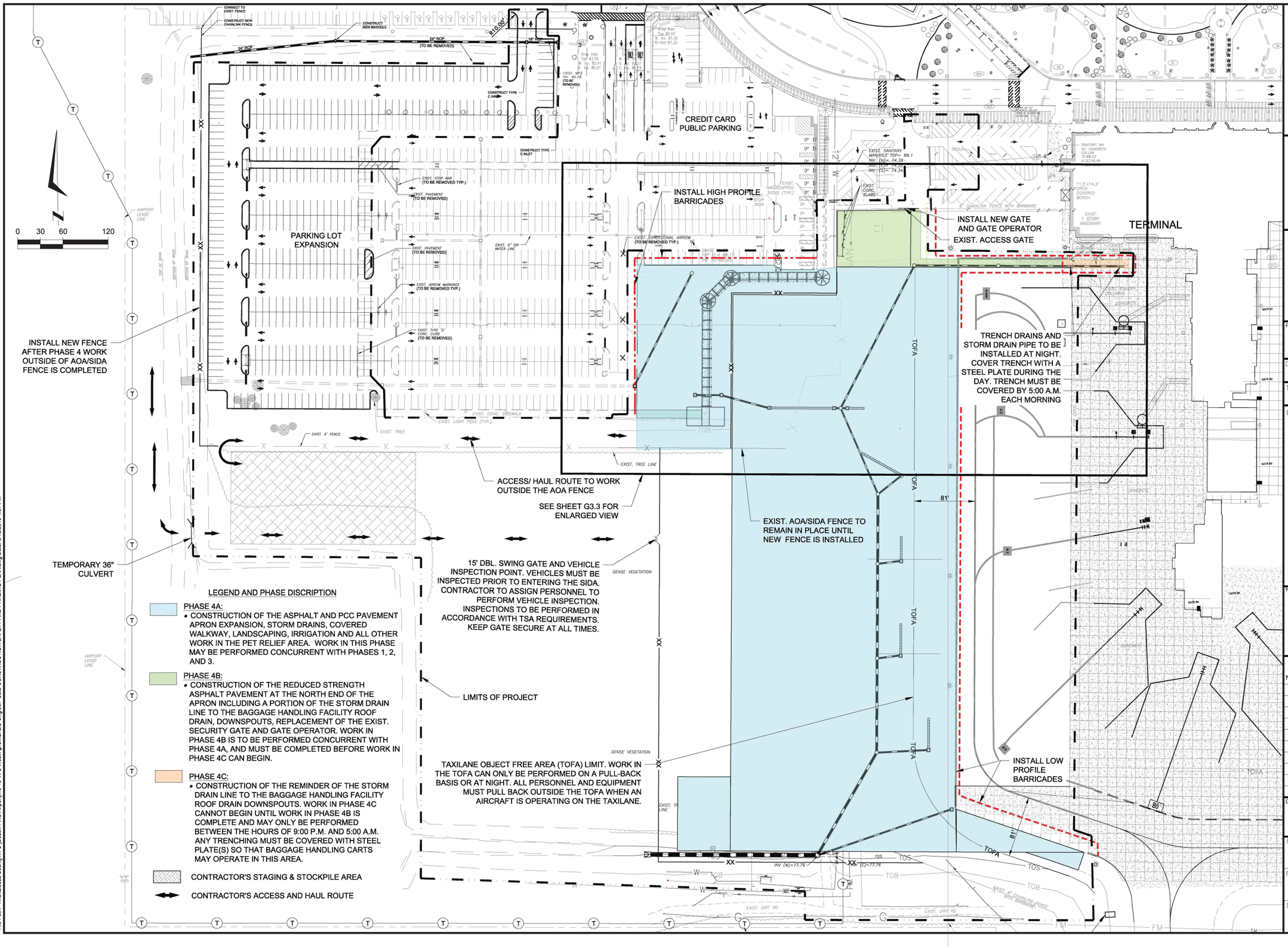

File Path: Y:\Okaloosa County\VPS (Destin-FWB Airport)\18-46 VPS West Apron\CADD-dwg\007-G3.2-CONSTRUCTION SAFETY AND PHASING PLAN.dwg Date: 5/15/2019 4:37 PM

FLY VPS

DESTIN - FORT WALTON BEACH AIRPORT

OKALOOSA COUNTY

INFRASTRUCTURE CONSULTING & ENGINEERING
5550 WEST IDLEWILD AVE. SUITE 102
TAMPA, FLORIDA 33634 (813) 330-2701
CERTIFICATE OF AUTHORIZATION NO.: 30862

Project Name:
CONSTRUCT WEST APRON EXPANSION AND INFRASTRUCTURE AT VPS

Designer:	Checked by:
HJ	JNG
Technician:	ICE Proj. No.:
MA	18-46

Engineer of Record:

Notes:

REVISIONS

No.	Description	Date	By

Drawing Name:
CONSTRUCTION SAFETY AND PHASING PLAN

FAA A.I.P. Project No.:
3-12-0081-029-2018

FDOT Project No.:

Date:	Sheet Number:
MAY 2019	G3.2

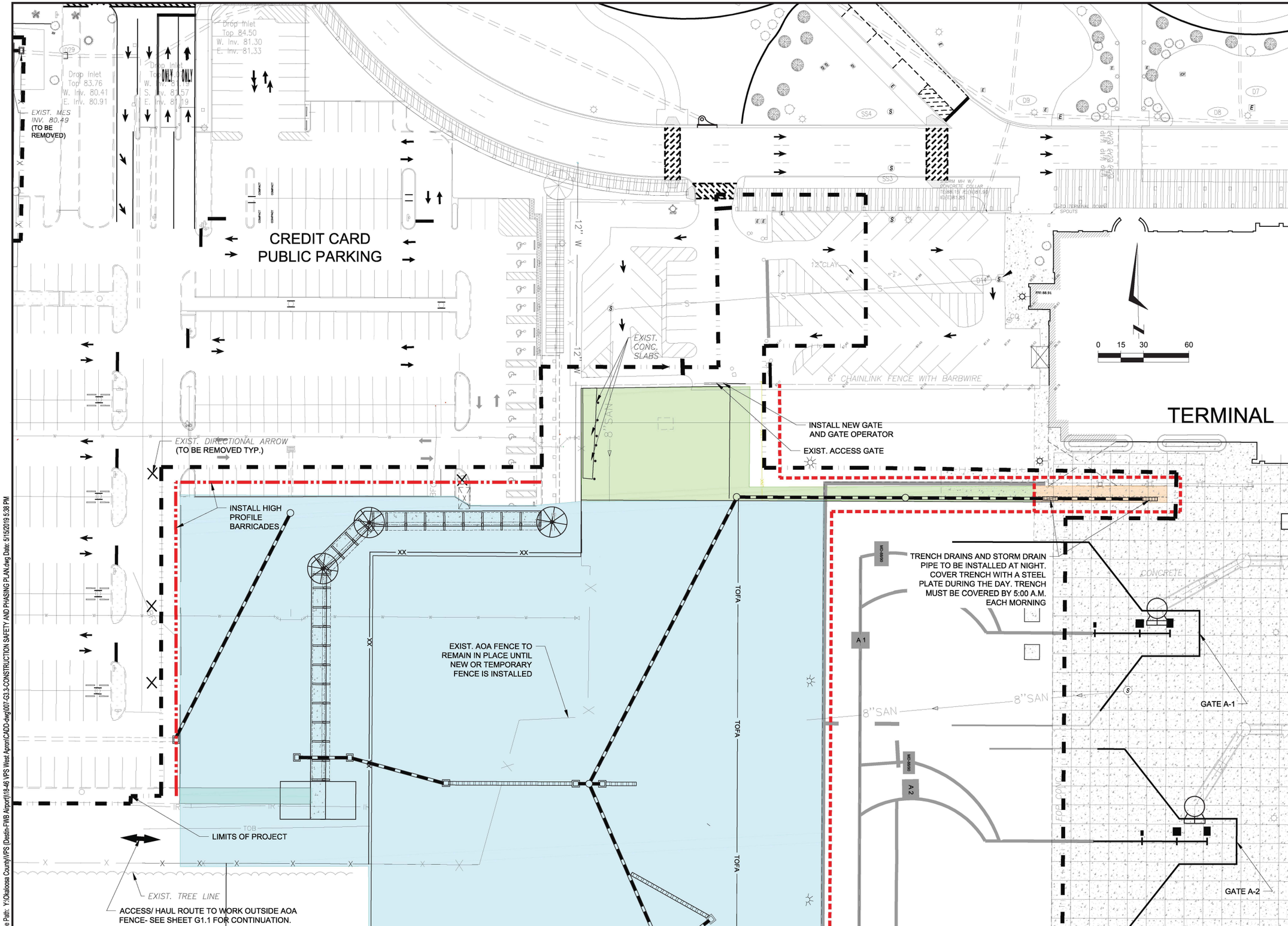

File Path: Y:\Okaloosa County\VPS (Destin-FWB Airport)\18-46 VPS West Apron\CADD-dwg\007-G3.3-CONSTRUCTION SAFETY AND PHASING PLAN.dwg Date: 5/15/2019 5:38 PM

FLY VPS

DESTIN - FORT
WALTON BEACH
AIRPORT

OKALOOSA COUNTY

INFRASTRUCTURE
CONSULTING & ENGINEERING
5550 WEST IDLEWILD AVE. SUITE 102
TAMPA, FLORIDA 33634 (813) 330-2701
CERTIFICATE OF AUTHORIZATION NO.: 30862

Project Name:
CONSTRUCT WEST APRON EXPANSION AND INFRASTRUCTURE AT VPS

Designer:	Checked by:
HJ	JNG
Technician:	ICE Proj. No.:
MA	18-46

Engineer of Record:

Notes:

REVISIONS

No.	Description	Date	By

Drawing Name:
CONSTRUCTION SAFETY AND PHASING PLAN

FAA A.I.P. Project No.:
3-12-0081-029-2018

FDOT Project No.:

Date:	Sheet Number:
MAY 2019	G3.3

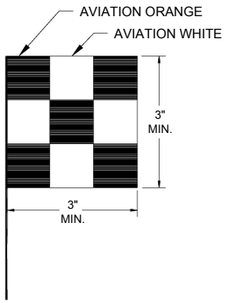

CONSTRUCTION SAFETY FLAG

NOTE:
SAFETY FLAG SHALL BE PROMINENTLY DISPLAYED ON ALL CONSTRUCTION EQUIPMENT. AN AMBER FLASHING LIGHT IS REQUIRED FOR NIGHT WORK AND MAY BE SUBSTITUTED FOR THE FLAG DURING THE DAY.

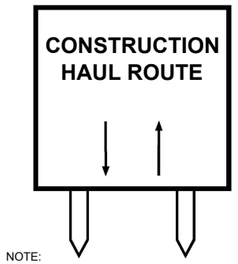

NOTE:
PLACE AT 50' INTERVALS ALONG HAUL ROUTES OR AS DIRECTED BY THE RPR.

CONSTRUCTION HAUL ROUTE SIGN

N.T.S.

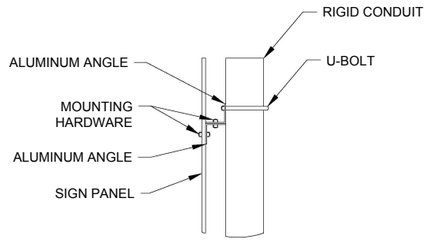

SIGN MOUNTING DETAIL

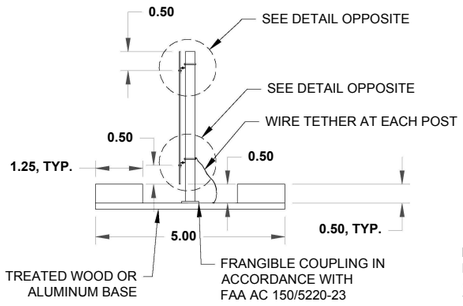

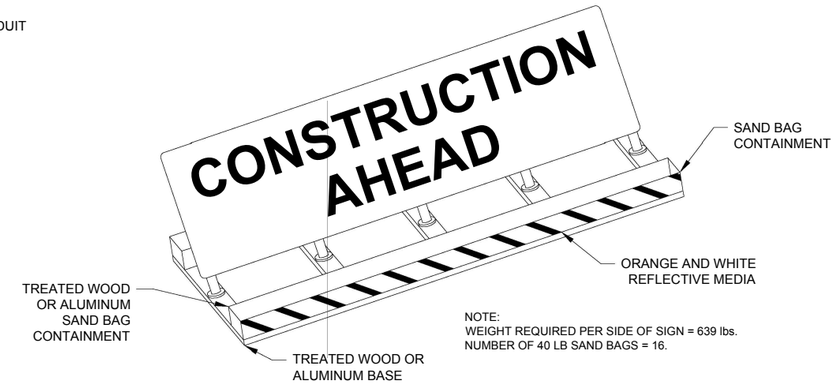

NOTE:
WEIGHT REQUIRED PER SIDE OF SIGN = 639 lbs.
NUMBER OF 40 LB SAND BAGS = 16.

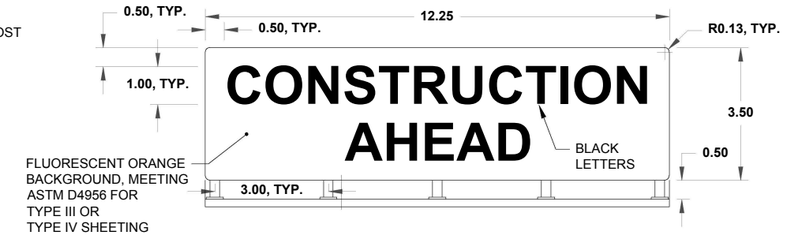

CONSTRUCTION AHEAD SIGN (FROM AC 150/5370-2G)

N.T.S.

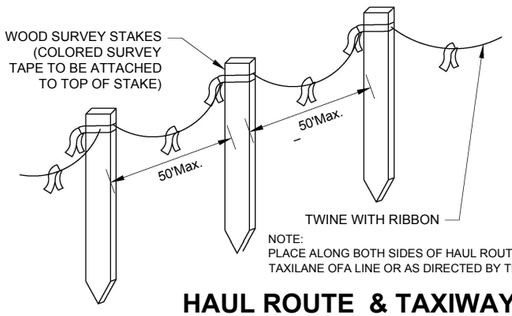

NOTE:
PLACE ALONG BOTH SIDES OF HAUL ROUTES AND ALONG TAXILANE OFA LINE OR AS DIRECTED BY THE RPR.

HAUL ROUTE & TAXIWAY/TAXILANE OBJECT FREE AREA (OFA) DELINEATOR

N.T.S.

NOTES:
1) ALL BARRICADES SHALL BE LINKED END TO END IN ALL LOCATIONS.
2) LOW PROFILE BARRICADES SHALL BE USED WHERE WORK IS ADJACENT TO ACTIVE AIRCRAFT OR INSIDE OF AN ACTIVE TAXIWAY'S SAFETY AREA. CAUTION LIGHTS TO BE RED IN COLOR AND FLASHING DURING HOURS OF DARKNESS.
3) BARRICADES TO BE WATER FILLED OR SECURED WITH SAND BAGS.
4) LOW PROFILE BARRICADE TO BE 10" HIGH, EXCLUDING LIGHTS AND FLAGS.

LOW PROFILE BARRICADE DETAIL

N.T.S.

TRAFFIC CONE

N.T.S.

SPECIFICATIONS

- 6' LENGTH
- 24" WIDTH
- 46" HEIGHT
- EMPTY : 130 LBS
- FULL (WATER FILLED): 1500 LBS

1. Interlocking Coupler
2. Light Box Recess
3. Fill Hole
4. Forklift Access
5. Drain Hole
6. Ground Mounting Ports

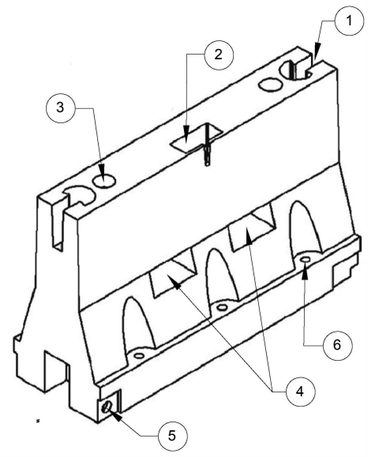

HIGH PROFILE BARRICADE (YODOCK 2001 OR EQUIVALENT)

N.T.S.

FLY VPS
DESTIN - FORT WALTON BEACH AIRPORT

OKALOOSA COUNTY

INFRASTRUCTURE CONSULTING & ENGINEERING
5550 WEST IDLEWILD AVE. SUITE 102
TAMPA, FLORIDA 33634 (813) 330-2701
CERTIFICATE OF AUTHORIZATION NO.: 30862

Project Name:
CONSTRUCT WEST APRON EXPANSION AND INFRASTRUCTURE AT VPS

Designer:	Checked by:
HJ	JNG
Technician:	ICE Proj. No.:
MA	18-46

Engineer of Record:

Notes:

REVISIONS

No.	Description	Date	By

Drawing Name:
CONSTRUCTION SAFETY AND PHASING DETAILS

FAA A.I.P. Project No.:
3-12-0081-029-2018

FDOT Project No.:

Date: MAY 2019

Sheet Number: G3.4

File Path: Y:\Okaloosa County\VPS (Destin-FWB Airport)\18-46 VPS West Apron\CADD-dwg\008-G3.4-CONSTRUCTION SAFETY & PHASING DETAILS.dwg Date: 5/17/2019 7:37 AM

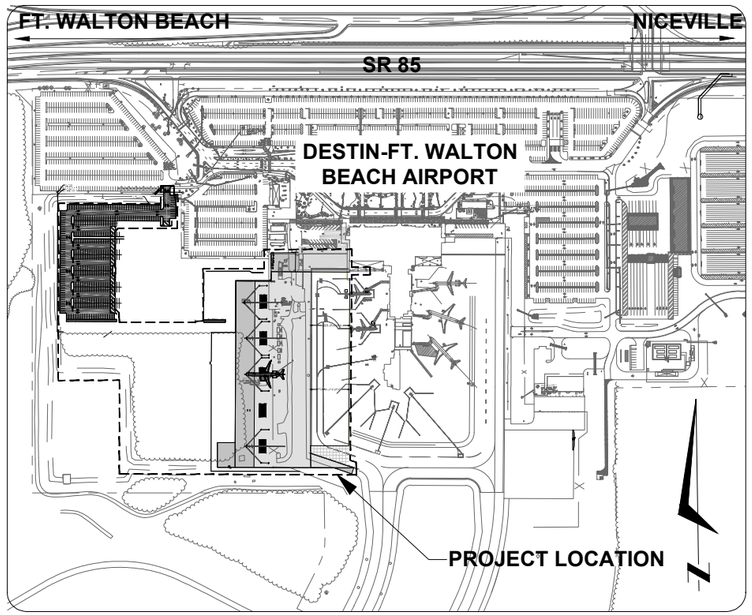

VICINITY MAP

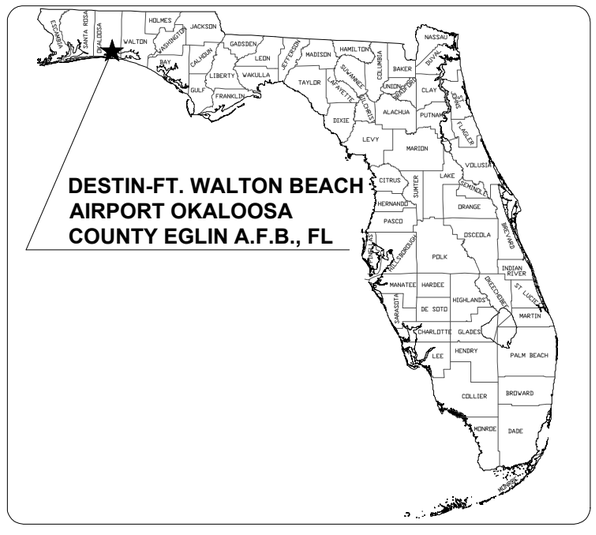

LOCATION MAP

CONSTRUCTION PLANS FOR:

CONSTRUCT WEST APRON EXPANSION AND INFRASTRUCTURE AT VPS

AT THE

DESTIN - FORT WALTON BEACH AIRPORT

FAA AIP PROJECT No.: 3-12-0081-029-2018

ITB AP __-__

MAY 2019

100% ISSUED FOR BIDS

BOARD OF COUNTY COMMISSIONERS

GRAHAM FOUNTAIN - CHAIRMAN
CAROLYN KETCHEL
NATHAN BOYLES
TREY GOODWIN
KELLY WINDES

JAMES N. GOODWIN, FL P.E. NO. 40995

INFRASTRUCTURE CONSULTING & ENGINEERING
5550 W. IDLEWILD AVENUE, SUITE 102
TAMPA, FL 33634
(813) 330-2704
CERTIFICATE OF AUTHORIZATION NO.: 30862

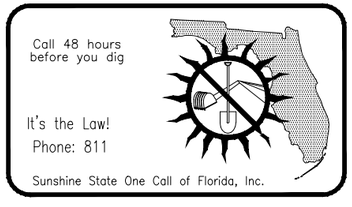

REVISIONS			
No.	Description	Date	By

SHEET INDEX

SHEET. No.	DESCRIPTION
G0.0	COVER SHEET
	CIVIL PLANS
G1.1	PROJECT LAYOUT PLAN
G1.2	OVERALL SITE PLAN
G1.3	GENERAL NOTES
G2.1	BORING LAYOUT PLAN
G2.2 - G2.6	BORING LOGS
G3.0	CONSTRUCTION SCHEDULE
G3.1 - G3.3	CONSTRUCTION SAFETY AND PHASING PLANS
G3.4	CONSTRUCTION SAFETY AND PHASING DETAILS
C1.1 - C1.2	TYPICAL SECTIONS AND DETAILS
C2.1	KEY SHEET
C3.1 -C3.4	STAKING AND DEMOLITION PLANS
C4.1 -C4.3	GRADING AND DRAINAGE PLANS
C4.4 -C4.12	DRAINAGE DETAILS
C4.13	STORMWATER POLLUTION PREVENTION PLAN
C5.1	CONCRETE JOINT PLAN AND DETAILS
C6.1 - C6.2	CHAIN LINK FENCE DETAILS
C6.3 - C6.4	GATE DETAILS
C7.1 - C7.5	MARKING AND SIGNAGE AND REMOVAL PLANS
C7.6	MARKING AND SIGNAGE DETAILS
C7.7	PARKING LOT MARKING AND SIGNING DETAILS
C8.1 - C8.4	WATER AND SANITARY SEWER PLANS
C8.5	OCWS WATER AND SEWER NOTES
C8.6	WATER MAIN PROFILE
C8.7 - C8.9	UTILITY DETAILS
C9.0 - C9.2	LIFT STATION DETAILS
	LANDSCAPING AND IRRIGATION PLANS
L1.0 - L2.0	LANDSCAPE PLANS
L3.0 - L4.0	IRRIGATION PLANS
L5.0	GENERAL AND PLANTING NOTES
L6.0	PLANTING AND IRRIGATION DETAILS
L7.0	IRRIGATION NOTES AND SPECIFICATIONS
	ARCHITECTURAL PLANS
G001	PROJECT LOCATION INFORMATION
G101	NOTES
G102	KEYNOTE INDEX
AD100	ARCHITECTURAL DEMOLITION PLAN
A100	ARCHITECTURAL PLAN
A102	TOP OF CANOPY PLAN
A401	FOUNDATION PLAN
A501	CANOPY ELEVATIONS
A801 - A802	MAIN CANOPY PLAN AND SECTION DETAILS
A811 - A812	UMBRELLA CANOPY PLAN AND SECTION DETAILS
A831	CANOPY FOUNDATION DETAILS
A832	CANOPY CONNECTIONS
A833	WALKWAY DETAILS
	ELECTRICAL PLANS
E0.1	ELECTRICAL LEGEND AND NOTES
E1.1 - E1.3	ELECTRICAL DEMOLITION PLANS
E2.1 - E2.3	ELECTRICAL LAYOUT PLANS
E3.1	HIGH MAST PHOTOMETRICS PLANS
E4.1	ELECTRICAL DETAILS
E5.1	LIGHT POLE DETAILS
E5.2	TAXIWAY FIXTURE DETAILS
E5.3	DUCT BANK DETAILS
S1.1	POLE FOUNDATION

Y:\Okaloosa County\VPS (Destin-FWB Airport)\18-46 VPS West Apron\CADD-dwg\001-G0.0- COVER SHEET.dwg May 20 2019 - 12:01

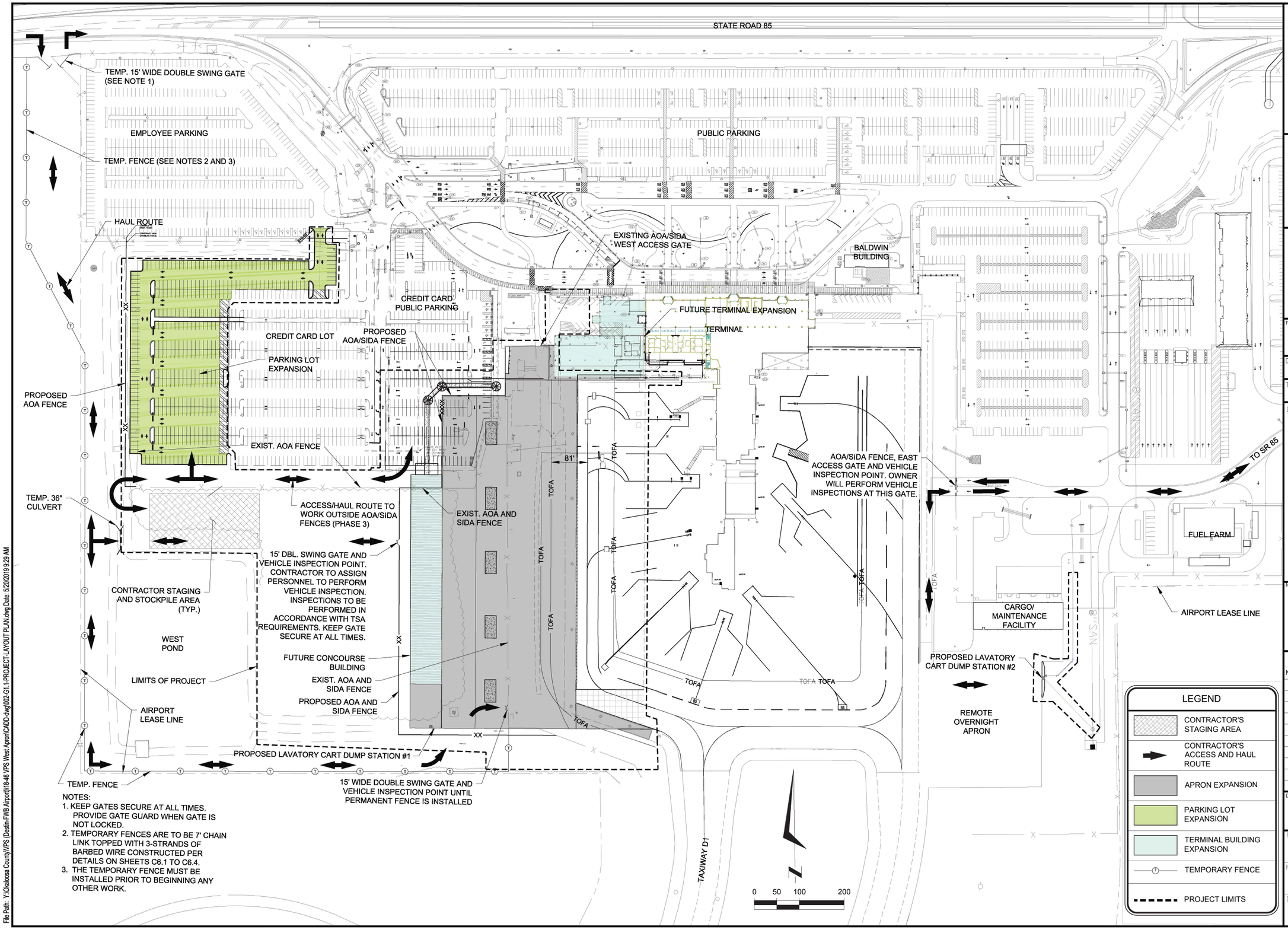

NOTES:
1. KEEP GATES SECURE AT ALL TIMES. PROVIDE GATE GUARD WHEN GATE IS NOT LOCKED.
2. TEMPORARY FENCES ARE TO BE 7' CHAIN LINK TOPPED WITH 3-STRANDS OF BARBED WIRE CONSTRUCTED PER DETAILS ON SHEETS C6.1 TO C6.4.
3. THE TEMPORARY FENCE MUST BE INSTALLED PRIOR TO BEGINNING ANY OTHER WORK.

File Path: Y:\Okaloosa County\VPS (Destin-FWB Airport)\18-46 VPS West Apron\CADD-dwg\002-G1.1-PROJECT-LAYOUT PLAN.dwg Date: 5/20/2019 9:29 AM

FLY VPS

DESTIN - FORT WALTON BEACH AIRPORT

OKALOOSA COUNTY

INFRASTRUCTURE CONSULTING & ENGINEERING
5550 WEST IDLEWILD AVE. SUITE 102
TAMPA, FLORIDA 33634 (813) 330-2701
CERTIFICATE OF AUTHORIZATION NO.: 30862

Project Name:
CONSTRUCT WEST APRON EXPANSION AND INFRASTRUCTURE AT VPS

Designer:	Checked by:
HJ	JNG
Technician:	ICE Proj. No.:
MA	18-46

Engineer of Record:

Notes:

REVISIONS

No.	Description	Date	By

Drawing Name:
PROJECT LAYOUT PLAN

FAA A.I.P. Project No.:
3-12-0081-029-2018

FDOT Project No.:

Date:	Sheet Number:
MAY 2019	G1.1

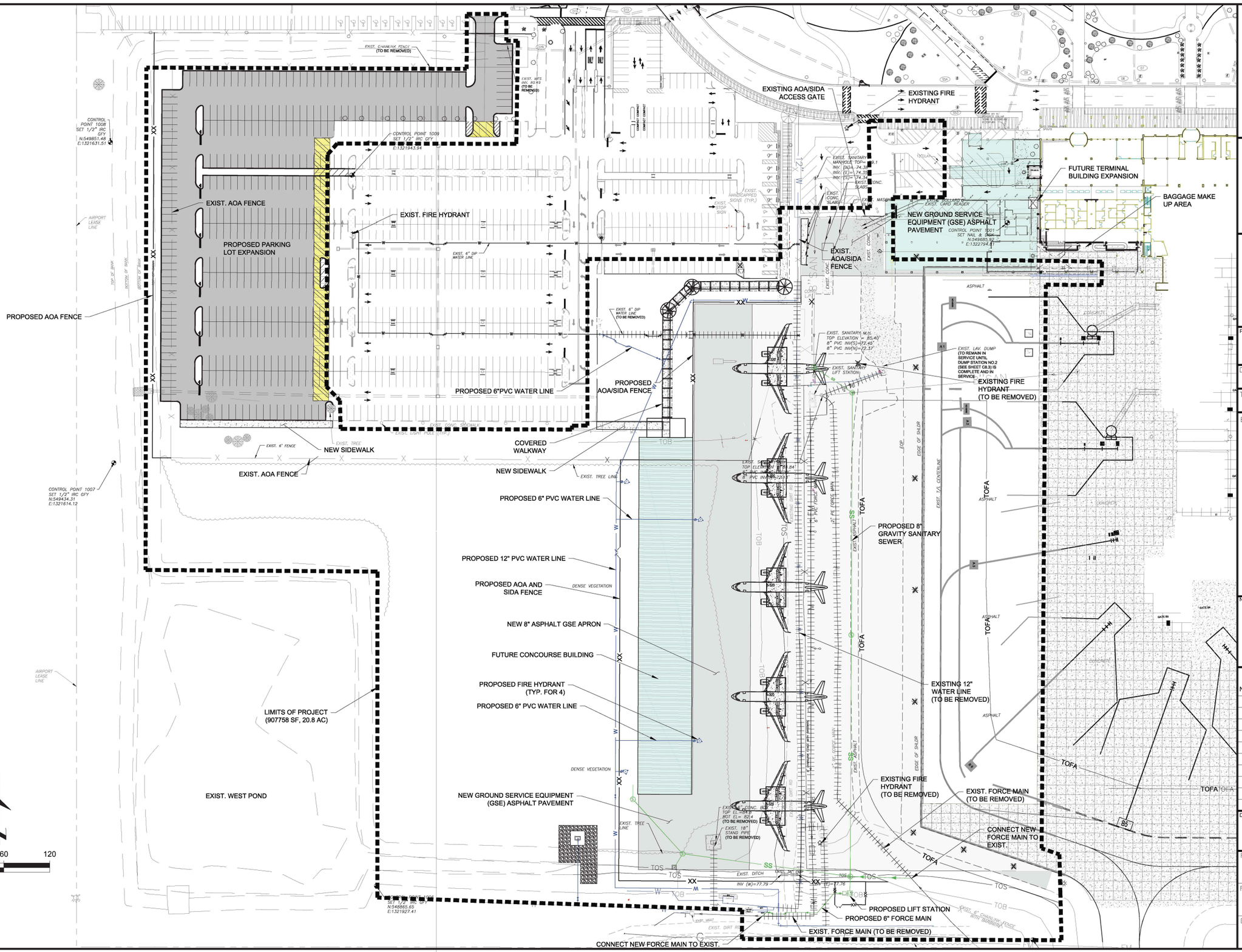

FLY VPS

DESTIN - FORT WALTON BEACH AIRPORT

OKALOOSA COUNTY

INFRASTRUCTURE CONSULTING & ENGINEERING
5550 WEST IDLEWILD AVE. SUITE 102
TAMPA, FLORIDA 33634 (813) 330-2701
CERTIFICATE OF AUTHORIZATION NO.: 30862

Project Name:
CONSTRUCT WEST APRON EXPANSION AND INFRASTRUCTURE AT VPS

Designer:	Checked by:
HJ	JNG
Technician:	ICE Proj. No.:
MA	18-46

Engineer of Record:

Notes:

REVISIONS

No.	Description	Date	By

Drawing Name:
OVERALL SITE PLAN

FAA A.I.P. Project No.:
3-12-0081-029-2018

FDOT Project No.:

Date:	Sheet Number:
MAY 2019	G1.2

File Path: Y:\Okaloosa County\VPS (Destin-FWB Airport)\18-46 VPS West Apron\CADD-dwg\003-G1.2-OVERALL SITE PLAN.dwg Date: 5/17/2019 4:15 PM

GENERAL NOTES

1. EACH CONTRACTOR SHALL OBTAIN, HAVE KNOWLEDGE OF, AND INCORPORATE THE FOLLOWING SAFETY PROVISIONS INTO THE CONSTRUCTION PROJECT:
   ~ OPERATIONAL SAFETY ON AIRPORTS DURING CONSTRUCTION - AC 150/5370-2G
   ~ AIRPORT SAFETY SELF-INSPECTION - AC 150/5200-18C
   ~ PAINTING, MARKING, AND LIGHTING OF VEHICLES USED ON AN AIRPORT - AC 150/5210-5D
   ~ FEDERAL AVIATION REGULATIONS, PART 139

2. FOR OTHER CONDITIONS RELATING TO SAFETY, SEE SPECIFICATIONS.

3. NOTICE TO AIRMEN (NOTAMS) - THE CONTRACTOR WILL PROVIDE THE NECESSARY INFORMATION ON CONSTRUCTION CONDITIONS (PAVEMENT CLOSURE, TIE-INS, ETC.) TO THE OWNER A MINIMUM OF SEVEN (7) DAYS PRIOR SO THAT A NOTAM CAN BE ISSUED IN ACCORDANCE WITH ESTABLISHED CRITERIA BY THE OWNER TO THE F.A.A. FLIGHT SERVICE STATION.

4. CONSTRUCTION STAKE-OUT SHALL BE PERFORMED BY CONTRACTOR IN ACCORDANCE WITH ARTICLE 50-06 OF THE GENERAL PROVISIONS OF THE CONTRACT DOCUMENTS. IT SHALL BE THE RESPONSIBILITY OF THE CONTRACTOR TO PROVIDE ALL MEASUREMENTS THAT MAY BE REQUIRED TO LAY OUT THE CONSTRUCTION. THE COST OF STAKING WILL NOT BE PAID FOR DIRECTLY AND SHALL BE INCLUDED IN THE UNIT PRICES FOR THE VARIOUS ITEMS OF WORK.

5. THE CONTRACTOR WILL BE RESPONSIBLE FOR THE CLEANUP AND DISPOSAL OF ALL TRASH AND DEBRIS CREATED BY HIS WORK OR PERSONNEL. NO BURNING IS ALLOWED ON SITE. ALL TRASH AND DEBRIS MUST BE DISPOSED OF OFFSITE. DEBRIS, WASTE AND LOOSE MATERIAL CAPABLE OF CAUSING DAMAGE TO AIRCRAFT LANDING GEAR, PROPELLERS OR BEING INGESTED IN JET ENGINES SHALL NOT BE ALLOWED ON ACTIVE AIRCRAFT MOVEMENT AREAS. IF THESE MATERIALS ARE OBSERVED TO BE ON ACTIVE AIRCRAFT MOVEMENT AREAS, THEY WILL BE REMOVED IMMEDIATELY AND/OR CONTINUOUSLY DURING CONSTRUCTION BY THE CONTRACTOR.

6. THE CONTRACTOR SHALL MAKE HIS OWN ARRANGEMENTS FOR ASPHALT AND OR CONCRETE BATCH PLANT LOCATIONS WHICH MUST BE LOCATED OFF AIRPORT PROPERTY.

7. THE CONTRACTOR SHALL VISIT SITE TO DETERMINE EXISTING CONDITIONS PRIOR TO SUBMITTING BID. THE CONTRACTOR SHALL REPORT TO THE ENGINEER ANY VARIATIONS FROM THE INFORMATION SHOWN ON THE CONSTRUCTION PLANS.

8. APPROVED CUTS IN PAVEMENT OR CONCRETE SHALL BE MADE USING A PAVEMENT SAW, AND SHALL BE PATCHED TO MATCH THE EXISTING SURFACE IN A MANNER APPROVED BY THE ENGINEER.

9. EXISTING EASEMENTS TO OTHER PROPERTIES SHALL BE MAINTAINED AT ALL TIMES.

10. AIRFIELD PAVEMENTS SHALL BE KEPT FREE OF ALL DEBRIS, DIRT, ETC., AT ALL TIMES. ANY SPILLAGE OF EXCAVATION OR OTHER MATERIAL SHALL BE CLEANED UP IMMEDIATELY BY THE CONTRACTOR WITH A MOTOR DRIVEN SWEEPER OR VACUUM AS REQUIRED BY THE ENGINEER. A PROGRAM OF REGULAR AIRFIELD PAVEMENT INSPECTION WILL BE PLANNED BY THE CONTRACTOR, AIRPORT OPERATIONS AND THE OWNER'S REPRESENTATIVE. SWEEPERS ARE TO BE EQUIPPED WITH NON-METALIC BROOMS.

11. ALL NON-PAVED AREAS OUTSIDE THE LIMITS OF CONSTRUCTION WHICH ARE DISTURBED BY THE CONTRACTOR'S OPERATIONS, SUCH AS THE CONTRACTOR'S ACCESS ROAD, STAGING AREA, HAUL ROUTES, ETC., SHALL BE RESTORED TO THEIR ORIGINAL CONDITION AND GRASSED PER FDOT SPECIFICATION SECTION 570 UPON COMPLETION OF THE PROJECT.

12. ANY DAMAGES DONE TO AIRPORT PROPERTY OR UTILITIES (SUCH AS RUNWAY, TAXIWAYS, APRONS, FENCING, EXISTING CABLES) WILL BE REPAIRED BY THE CONTRACTOR TO THE APPROVAL OF THE OWNER OF THE FACILITY IN A SATISFACTORY MANNER. THE CONTRACTOR WILL BEAR ALL COSTS FOR REPAIRS.

13. THE CONTRACTOR SHALL MAINTAIN SECURITY WITHIN THE PROJECT SITE AT ALL TIMES. NO UNAUTHORIZED PERSONNEL SHALL BE ALLOWED ON THE SITE.

14. CONTRACTOR SHALL MAINTAIN ALL AIRFIELD SAFETY DEVICES SUCH AS STAKED LIMIT LINES, FOR THE DURATION OF THE PROJECT AS REQUIRED. DAMAGED STAKES OR FLAGGING SHALL BE REPLACED IMMEDIATELY. CONTRACTOR TO SUBMIT PLAN SHOWING LOCATION OF LIMIT LINES FOR EACH PHASE AND FOR PROJECT DURATION TO THE ENGINEER FOR APPROVAL.

15. THE CONTRACTOR SHALL OBTAIN ALL PERMITS NECESSARY FOR THE COMPLETION OF THIS PROJECT.

16. THE CONTRACTOR IS RESPONSIBLE FOR COMPLIANCE WITH ALL ENVIRONMENTAL RULES AND REGULATIONS OF THE CITY, COUNTY, STATE, ARMY CORPS OF ENGINEERS, AND ANY OTHER JURISDICTIONAL AGENCIES, AND ALL CONDITIONS SET FORTH IN ENVIRONMENTAL PERMITS.

17. AIRCRAFT OPERATING ON THE AIRFIELD MAKE THE CONSTRUCTION AREA A ZONE OF HIGH LEVEL NOISE. THE CONTRACTOR IS ADVISED TO TAKE THE NECESSARY PRECAUTIONS, SUCH AS THE USE OF EAR PLUGS AND EAR MUFFS TO PREVENT EAR INJURY TO ANY PERSONNEL WORKING IN THE AREA.

18. ALL DISPUTES ARISING FROM THE CONTRACTOR SHALL BE DECIDED BY THE ENGINEER, WHOSE DECISION SHALL BE FINAL.

19. ALL DEMOLISHED MATERIALS BECOME THE PROPERTY OF THE CONTRACTOR UNLESS OTHERWISE SHOWN IN THE CONTRACT DOCUMENTS. CONSTRUCTION AND DEMOLITION DEBRIS SHALL BE LEGALLY DISPOSED OF OFF AIRPORT PROPERTY.

20. THE CONTRACTOR SHALL KEEP A WATER TRUCK ONSITE AT ALL TIMES FOR THE PURPOSE OF CONTROLLING DUST AS REQUIRED BY THE CONTRACT DOCUMENTS.

HAUL ROUTE / STAGING

21. THE CONTRACTOR WILL BE RESPONSIBLE FOR THE STORAGE AND SECURITY OF HIS MATERIAL AND EQUIPMENT AND SHALL ERECT STORAGE FACILITIES AND FENCING AS NECESSARY. THE CONTRACTOR'S STORAGE AND STAGING AREA SHALL BE IN THE LOCATION SHOWN ON DRAWING G1.1.

22. THE CONTRACTOR'S STAGING AREA(S) AND HAUL ROUTES SHOWN ON THE PLANS ARE GENERAL AND FOR INFORMATIONAL PURPOSES ONLY. THE ACTUAL SIZE AND LOCATION OF STAGING AREAS AND HAUL ROUTES WILL BE APPROVED BY THE OWNER PRIOR TO CONSTRUCTION.

23. CONTRACTOR WILL NOT BE ALLOWED TO USE ANY OF THE EXISTING RUNWAYS OR TAXIWAYS AS PART OF THE HAUL ROAD UNLESS SPECIFICALLY AUTHORIZED BY THE OWNER'S REPRESENTATIVE. UNDER NO CIRCUMSTANCE SHALL THE CONTRACTOR CROSS ANY RUNWAY AT ANY TIME WITH CONSTRUCTION VEHICLES OR EQUIPMENT.

24. ALL CONSTRUCTION TRAFFIC SHALL ENTER AND EXIT THE PROJECT AREA THROUGH THE PROJECT ACCESS ROUTES APPROVED BY THE ENGINEER ONLY. THE CONTRACTOR SHALL BE RESPONSIBLE FOR THE SECURITY OF ALL GATES HE USES FOR ACCESS ONTO AIRPORT PROPERTY. THE CONTRACTOR SHALL POST A GUARD AT ANY ACCESS GATE THAT IS NOT LOCKED.

25. THE EXISTING AIRPORT PAVEMENTS ACCESS ROADS AND HAUL ROUTES MAY NOT BE CAPABLE OF SUPPORTING CERTAIN TYPES OF CONSTRUCTION EQUIPMENT. PRIOR TO BIDDING, THE CONTRACTOR SHALL FULLY SATISFY HIMSELF AS TO THE ABILITY OF THE EXISTING AIRPORT PAVEMENTS TO SATISFACTORILY SUSTAIN THE TYPE OF EQUIPMENT HE PLANS TO USE. CONTRACTOR SHALL SIZE THE EQUIPMENT USED FOR CONSTRUCTION ACCORDINGLY. ANY DAMAGE CAUSED BY HAULING OR ANY OTHER CONSTRUCTION ACTIVITY TO EXISTING PAVEMENT SHALL BE REPAIRED BY THE CONTRACTOR AT NO ADDITIONAL COST TO THE OWNER.

26. THE OWNER'S REPRESENATIVE SHALL DESIGNATE AREAS TO BE USED BY THE CONTRACTOR FOR THE PARKING OF CONSTRUCTION EQUIPMENT AND VEHICLES WHEN NOT ENGAGED IN THE CONSTRUCTION DURING NON-WORKING DAYS AND NIGHTS AS WELL AS AREAS FOR CONTRACTOR'S EMPLOYEES AUTO PARKING.

27. THE CONTRACTOR IS RESPONSIBLE FOR COORDINATING AND PROVIDING ALL PERMANENT AND TEMPORARY UTILITY CONNECTIONS TO THE STAGING AREA.

MOVEMENT INSIDE AIRPORT OPERATIONS AREA (AOA)

28. AREAS OUTSIDE THE PROJECT LIMITS ARE DESIGNATED AS RESTRICTED AREAS. THE CONTRACTOR'S FORCES ARE PROHIBITED FROM ENTERING RESTRICTED AREAS AT ANY TIME, UNLESS SPECIFICALLY AUTHORIZED BY THE OWNER'S REPRESENTATIVE OR AIRPORT OPERATIONS.

29. THE CONTRACTOR SHALL CONDUCT HIS CONSTRUCTION OPERATIONS AS SHOWN ON THE CONSTRUCTION SAFETY & PHASING PLAN, AND HIS APPROVED PHASING PLAN. THE CONTRACTOR SHALL COORDINATE ALL CONSTRUCTION ACTIVITIES WITH THE OWNER'S REPRESENTATIVE TO MINIMIZE INTERFERENCE TO AIRCRAFT OPERATIONS DURING CONSTRUCTION.

30. CONTRACTOR SHALL REVIEW THE CONSTRUCTION SAFETY AND PHASING PLAN (CSPP) ATTACHED TO THE PROJECT SPECIFICATIONS. PRIOR TO THE PRE-CONSTRUCTION CONFERENCE, A SIGNED LETTER SHALL BE SUBMITTED TO THE OWNER INDICATING ACCEPTANCE OF ALL ELEMENTS OF THE CSPP. TITLE THE LETTER "SAFETY PLAN COMPLIANCE DOCUMENT"

31. NO CONTRACTOR VEHICLES, EQUIPMENT, OR PERSONNEL SHALL CROSS OR BE WITHIN ANY RUNWAY SAFETY AREA OR WITHIN ANY TAXIWAY OR TAXILANE OBJECT FREE AREA AS DELINEATED IN THE PLANS. THE CONTRACTOR SHALL NOT PARK OR LEAVE UNATTENDED ANY EQUIPMENT WITHIN THE RUNWAY OBJECT FREE AREA (ROFA) OR THE RUNWAY PROTECTION ZONE (RPZ). EQUIPMENT NOT MANNED AND BEING USED SHALL NOT BE ALLOWED WITHIN THE ROFA OR RPZ.

32. ALL VEHICLES USED ON THE AIRFIELD SHALL MEET FAA REQUIREMENTS FOR MARKINGS AND LIGHTING. (SEE AC 150/5210-5D).

33. ALL ACTIVE AIRPORT OPERATIONAL AREAS WHICH ARE ADJACENT TO A CONSTRUCTION WORK AREA SHALL BE SEPARATED BY TYPE II LOW PROFILE BARRICADES OR OTHER BARRIER APPROVED BY THE ENGINEER. NO CONSTRUCTION TRAFFIC WILL CROSS ACTIVE AIRPORT OPERATIONAL AREAS. THE CONTRACTOR SHALL PROVIDE AND INSTALL THE BARRIERS AS SHOWN ON THE DRAWINGS AND WHERE DIRECTED BY THE ENGINEER. SEE SPECIFICATION 01030 AND 01530 FOR ADDITIONAL INFORMATION.

34. THE CONTRACTOR SHALL WORK WITH THE ENGINEER IN SCHEDULING ALL TAXIWAY OPENINGS/CLOSINGS TO BE CONSISTENT WITH AIRFIELD OPERATIONS. WHEN THE CONTRACTOR'S OPERATIONS CROSS ACTIVE TAXIWAYS, HE SHALL BE REQUIRED TO PROVIDE A FLAGMAN ON EACH SIDE OF THE ACTIVE CROSSING TO DIRECT VEHICULAR TRAFFIC AND PROTECT AIRCRAFT TRAFFIC. THE CONTRACTOR SHALL ALSO HAVE SUITABLE EQUIPMENT APPROVED BY THE ENGINEER AT EACH CROSSING TO KEEP THE CROSSING CLEAN OF ALL DIRT AND DEBRIS AND SAFE FOR AIRCRAFT TRAFFIC.

35. ALL VEHICLES MUST BE INSPECTED BY AIRPORT POLICE PRIOR TO ENTERING AOA. ACCESS IS PROVIDED THROUGH CONTRACTOR'S PROPOSED TEMPORARY GATE.

36. ALL NON-RADIO EQUIPPED CONTRACTOR VEHICLES THAT ARE REQUIRED TO OPERATE ON OR ACROSS ACTIVE RUNWAYS, TAXIWAYS, APRONS AND RUNWAY APPROACH AND PROTECTION ZONES SHALL DO SO UNDER THE DIRECT CONTROL OF A RADIO EQUIPPED ESCORT VEHICLE OPERATED BY BADGED PERSONNEL ONLY. EQUIPPED VEHICLES SHALL MONITOR GROUND CONTROL FREQUENCY 121.8 MHZ. ALL AIRCRAFT TRAFFIC ON RUNWAYS, TAXIWAYS AND APRONS SHALL HAVE PRIORITY OVER CONTRACTOR'S TRAFFIC.

BURIED UTILITIES

37. PRIOR TO DIGGING ANY TRENCHES, THE CONTRACTOR SHALL NOTIFY ALL UTILITIES (ELECTRIC, GAS, TELEPHONE, WATER, SEWER) AND OBTAIN LOCATIONS OF UNDERGROUND UTILITIES.

38. CONTRACTOR SHALL BE RESPONSIBLE FOR THE LOCATION AND IDENTIFICATION OF ALL EXISTING UTILITIES AND UNDERGROUND PIPELINES IN CONSTRUCTION AREA. ANY DAMAGES TO EXISTING UTILITIES OR UNDERGROUND PIPELINES ON OR OFF AIRPORT PROPERTY SHALL BE THE RESPONSIBILITY OF THE CONTRACTOR. ALL REPAIR WORK SHALL MEET THE APPROVAL OF THE OWNER OF THE DAMAGED UTILITY. NO REIMBURSEMENT WILL BE ALLOWED FOR UTILITY/PIPE REPAIR OR REPLACEMENT.

39. THE CONTRACTOR SHALL PROTECT EXISTING UTILITIES, AIRFIELD LIGHTING AND NAVAIDS NOT CALLED OUT TO BE REMOVED OR ABANDONED. ANY DAMAGES DONE TO AIRPORT PROPERTY OR UTILITIES (INCLUDING, BUT NOT LIMITED T0 RUNWAYS, TAXIWAYS, APRONS, FENCING, EXISTING CABLES, LIGHTING, SIGNS, NAVAIDS) WILL BE REPAIRED BY THE CONTRACTOR TO THE APPROVAL OF THE OWNER OF THE FACILITY IN A SATISFACTORY MANNER. THE CONTRACTOR WILL BEAR ALL COSTS FOR REPAIRS.

40. ANY UNPLANNED, UNAPPROVED, OR ACCIDENTAL SHUTDOWN OR INTERRUPTION OF SERVICE TO ANY LIGHTING CIRCUIT OR NAVIGATIONAL AID REQUIRES IMMEDIATE NOTIFICATION OF AIRPORT OPERATIONS AND THE OWNER'S REPRESENTATIVE BY THE CONTRACTOR. THE COST OF MATERIALS AND LABOR REQUIRED TO REPAIR THE LIGHTING CIRCUIT SHALL BE BORNE BY THE CONTRACTOR.

SECURITY NOTES

41. GENERAL INTENT: IT IS INTENDED THAT THE CONTRACTOR SHALL COMPLY WITH ALL REQUIREMENTS OF THE AIRPORT SECURITY PLAN AND WITH THE SECURITY REQUIREMENTS SPECIFIED HEREIN BY AIRPORT OPERATIONS. THE CONTRACTOR SHALL DESIGNATE TO THE ENGINEER AND AIRPORT OPERATIONS, IN WRITING, THE NAME OF HIS "CONTRACTOR SECURITY OFFICER (CSO)." THE CSO SHALL REPRESENT THE CONTRACTOR ON THE SECURITY REQUIREMENTS FOR THE CONTRACT.

42. CONTRACTOR PERSONNEL SECURITY ORIENTATION: THE CSO SHALL BE RESPONSIBLE FOR BRIEFING ALL CONTRACTOR AND SUBCONTRACTOR PERSONNEL ON SECURITY REQUIREMENTS. ALL NEW CONTRACTOR EMPLOYEES SHALL BE BRIEFED ON SECURITY REQUIREMENTS PRIOR TO WORKING IN THE CONSTRUCTION AREA.

43. ACCESS TO THE SITE: CONTRACTOR'S ACCESS TO THE SITE SHALL BE AS SHOWN ON THE SAFETY AND PHASING PLANS. NO OTHER ACCESS POINTS SHALL BE ALLOWED UNLESS APPROVED BY AIRPORT OPERATIONS. ALL CONTRACTOR TRAFFIC AUTHORIZED TO ENTER THE SITE SHALL BE EXPERIENCED IN THE ROUTE OR GUIDED BY CONTRACTOR PERSONNEL. THE CONTRACTOR SHALL BE RESPONSIBLE FOR TRAFFIC CONTROL TO AND FROM THE VARIOUS CONSTRUCTION AREAS ON THE SITE, THE CONTRACTOR SHALL NOT PERMIT ANY UNAUTHORIZED CONSTRUCTION PERSONNEL OR TRAFFIC ON THE SITE. ACCESS GATES TO THE SITE SHALL BE ATTENDED BY THE CONTRACTOR IF THE CONTRACTOR CHOOSES TO LEAVE ANY ACCESS GATE OPEN, IT SHALL BE ATTENDED BY BADGED CONTRACTOR PERSONNEL WHO ARE FAMILIAR WITH THE REQUIREMENTS OF THE AIRPORT OPERATIONS SECURITY PROGRAM. THE CONTRACTOR IS RESPONSIBLE FOR THE IMMEDIATE CLEANUP OF ANY DEBRIS DEPOSITED ALONG THE ACCESS ROUTE AS A RESULT OF HIS CONSTRUCTION TRAFFIC. DIRECTIONAL SIGNING FROM THE ACCESS GATE ALONG THE DELIVERY ROUTE TO THE STORAGE AREA, PLANT SITE OR WORK SITE SHALL BE DIRECTED BY AIRPORT OPERATIONS.

44. MATERIALS DELIVERY TO THE SITE: ALL CONTRACTOR'S MATERIAL ORDERS FOR DELIVERY TO THE WORK SITE WILL USE AS A DELIVERY ADDRESS, THE STREET NAME ASSIGNED TO THE ACCESS POINT AT THE CONTRACTOR'S STAGING SITE AT THE AIRPORT. THE NAME "DESTIN-FT.WALTON BEACH AIRPORT" SHALL NOT BE USED IN THE DELIVERY ADDRESS AT ANY TIME. THIS WILL PRECLUDE DELIVERY TRUCKS FROM ENTERING INTO THE TERMINAL COMPLEX, OR TAKING SHORT CUTS THROUGH THE PERIMETER GATES AND ENTERING INTO AIRCRAFT OPERATIONS AREA INAPPROPRIATELY.

45. CONSTRUCTION AREA LIMITS: THE LIMITS OF CONSTRUCTION, MATERIAL STORAGE AREAS, PLANT SITE, EQUIPMENT STORAGE AREA, PARKING AREA AND OTHER AREAS DEFINED AS REQUIRED FOR THE CONTRACTOR'S EXCLUSIVE USE DURING CONSTRUCTION SHALL BE MARKED BY THE CONTRACTOR. THE CONTRACTOR SHALL ERECT AND MAINTAIN AROUND THE PERIMETER OF THESE AREAS SUITABLE FENCING, MARKING AND/OR WARNING DEVICES VISIBLE FOR DAY/NIGHT USE. TEMPORARY BARRICADES, FLAGGING AND FLASHING WARNING LIGHTS WILL BE REQUIRED AT CRITICAL ACCESS POINTS. TYPE OF MARKING AND WARNING DEVICES SHALL BE APPROVED BY AIRPORT OPERATIONS. CONTRACTOR SHALL MAINTAIN ALL AIRFIELD SAFETY DEVICES SUCH AS STAKED LIMIT LINES AND BARRICADE LIGHTS FOR THE DURATION OF THE PROJECT AS REQUIRED. DAMAGED STAKES OR FLAGGING SHALL BE REPLACED IMMEDIATELY. CONTRACTOR TO SUBMIT PLAN SHOWING LOCATION OF LIMIT LINES FOR EACH PHASE AND FOR PROJECT DURATION TO THE ENGINEER FOR APPROVAL.

46. IDENTIFICATION-PERSONNEL: ALL EMPLOYEES, AGENTS VENDORS, INVITEES, ETC. OF THE CONTRACTOR OR SUBCONTRACTORS REQUIRING ACCESS TO THE AIR OPERATIONS AREA (AOA) SITE SHALL, IN ACCORDANCE WITH THE AIRPORT OPERATIONS SECURITY PROGRAM, BE REQUIRED TO DISPLAY DESTIN-FT. WALTON BEACH AIRPORT ISSUED IDENTIFICATION OR BE UNDER ESCORT BY PROPERLY BADGED PERSONNEL. CONTRACTORS SELECTED BADGE APPLICANTS MUST PASS FBI BACKROUND CHECKS. THERE IS A COST OF $60.00 PER APPLICANT FOR FBI BACKGROUND CHECK, FINGERPRINTING AND THE COST OF THE BADGE. BEFORE A BADGE IS ISSUED, EACH INDIVIDUAL MUST GO THROUGH SIDA TRAINING. THESE BADGES WILL BE IDENTIFIED NUMERICALLY AND ISSUED TO INDIVIDUAL EMPLOYEES WITH A PERMANENT RECORD MAINTAINED ON EACH INDIVIDUAL TO WHOM A BADGE IS ISSUED. AT THE COMPLETION OF THE CONTRACT ALL BADGES MUST BE RETURNED TO AIRPORT OPERATIONS OR A CHARGE OF $100.00 PER BADGE WILL BE ASSESSED FOR ALL BADGES NOT RETURNED. IDENTIFIABLE HARD HATS OR OTHER IDENTIFICATION SHALL ALSO BE WORN AT ALL TIMES IF REQUIRED BY AIRPORT OPERATIONS. THE PRIME CONTRACTOR SHALL BE RESPONSIBLE FOR BACKGROUND CHECKS ON ALL OF ITS OWN AND ALL SUBCONTRACTOR EMPLOYEES THE CONTRACTOR AND ITS STAFF IS RESPONSIBLE FOR ATTENDING TRAINING AND COMPLETING SECURITY BADGE APPLICATIONS. ESTIMATED TIME FOR COMPLETION IS 2 HOURS. FINGERPRINTING WOULD BE DONE ON THE APPLICANT'S FIRST VISIT TO THE AIRPORT. AFTER RESULTS OF FINGERPRINT BASED BACKGROUND CHECKS ARE APPROVED THE APPLICANT WOULD NEED TO RETURN TO THE AIRPORT FOR THE 2 HOUR SIDA TEST. FINGERPRINTING MUST BE DONE BY VPS. CERTIFICATES FOR BACKGROUND CHECKS DONE AT OTHER AIRPORTS WILL NOT BE ACCEPTED.

47. IDENTIFICATION-VEHICLES: THE CONTRACTOR, THROUGH THE CSO, SHALL ESTABLISH AND MAINTAIN A LIST OF CONTRACTOR AND SUBCONTRACTOR VEHICLES AUTHORIZED TO OPERATE ON THE SITE AND SHALL ISSUE A PERMIT TO EACH VEHICLE TO BE MADE AVAILABLE UPON REQUEST BY AIRPORT OPERATIONS THE RESIDENT PROJECT REPRESENTATIVE OR ANY AUTHORIZED AIRPORT REPRESENTATIVES. A BLOCK OF VEHICLE PERMITS SHALL BE ISSUED BY AIRPORT OPERATIONS TO THE CONTRACTOR AND AT THE COMPLETION OF THE CONTRACT ALL PERMITS WILL BE RETURNED TO AIRPORT OPERATIONS. IN LIEU OF ISSUING INDIVIDUAL VEHICLE PERMITS, THE CSO CAN REQUIRE EACH VEHICLE TO DISPLAY A LARGE COMPANY SIGN ON BOTH SIDES OF THE VEHICLE AND ADVISE AIRPORT OPERATIONS AND SECURITY OF A CURRENT LIST OF COMPANIES AUTHORIZED TO ENTER AND CONDUCT WORK ON THE AIRPORT. CONTRACTOR EMPLOYEE VEHICLES SHALL BE RESTRICTED TO THE CONTRACTOR'S EMPLOYEE PARKING AREA AND ARE NOT ALLOWED ON THE AOA AT ANY TIME.

48. FINES: PAYMENT OF ALL FINES ASSESSED TO DESTIN-FT. WALTON BEACH AIRPORT DUE TO VIOLATIONS BY THE CONTRACTOR OF FAA SECURITY OR SAFETY REQUIREMENTS SHALL BE THE SOLE RESPONSIBILITY OF THE CONTRACTOR. AIRPORT OPERATIONS PERSONEL DO ISSUE SIDA VIOLATIONS FOR INFRACTIONS BY AN INDIVIDUAL, WHICH CAN RESULT IN REVOCATION OF THE BADGE AND POSSIBLE TSA FINES.

49. AREAS OUTSIDE THE PROJECT LIMITS ARE DESIGNATED AS RESTRICTED AREAS. THE CONTRACTOR'S FORCES ARE PROHIBITED FROM ENTERING RESTRICTED AREAS AT ANY TIME, UNLESS SPECIFICALLY AUTHORIZED BY THE ENGINEER OR AIRPORT OPERATIONS.

QUALITY CONTROL PLAN

50. QUALITY CONTROL PLAN: WITHIN 10 DAYS OF NOTIFICATION OF INTENT TO AWARD, THE CONTRACTOR SHALL SUBMIT SEVEN (7) COPIES OF A WRITTEN QUALITY CONTROL PLAN. THE CONTRACTOR SHALL DESIGNATE A QUALITY CONTROL OFFICER RESPONSIBLE FOR THE QUALITY OF CONSTRUCTION AND SHALL INCLUDE AN ORGANIZATIONAL CHART DESIGNATING QUALITY CONTROL RESPONSIBILITIES. THE PLAN SHALL ENCOMPASS A PROGRAM OF QUALITY CONTROL ACTIVITIES FOR THE PROJECT AS A WHOLE, AS WELL AS SPECIFIED PROCEDURES FOR EACH ELEMENT OF WORK. FOR EACH MAJOR ELEMENT OF WORK, THE CONTRACTOR SHALL DESCRIBE IN THE QUALITY CONTROL PLAN PRELIMINARY INSPECTION PROCEDURES TO BE ACCOMPLISHED PRIOR TO START UP, PROGRESS INSPECTION PROCEDURES TO MONITOR THE WORK IN PROGRESS, AS WELL AS FINAL INSPECTIONS TO VERIFY ALL TESTS HAVE BEEN PERFORMED AND ARE PASSING, AND ALL CONDITIONS OF THE SPECIFICATIONS HAVE BEEN MET. FOR ADDITIONAL QUALITY CONTROL REQUIREMENTS, REFER TO SECTION 100 OF THE GENERAL PROVISIONS.

UTILITY CONTACT INFORMATION:

ORGANIZATION	NAME	PHONE
GULF POWER	CHAD FOUNTAIN	(850) 224-4780
COX COMMUNICATIONS	ROGER DIXON	(850 664-3763
OKALOOSA WATER AND SEWER	GABBY ARCEO	(850) 651-7504
EGLIN WATER AND SEWER (ASUS)	JASON DRAYER	(850) 324-2595
OKALOOSA GAS DISTRICT	ESSA RHEBI	(850) 729-4864

FLY VPS

DESTIN - FORT WALTON BEACH AIRPORT

OKALOOSA COUNTY

INFRASTRUCTURE CONSULTING & ENGINEERING
5550 WEST IDLEWILD AVE. SUITE 102
TAMPA, FLORIDA 33634 (813) 330-2701
CERTIFICATE OF AUTHORIZATION NO.: 30862

Project Name:
CONSTRUCT WEST APRON EXPANSION AND INFRASTRUCTURE AT VPS

Designer:	Checked by:
HJ	JNG
Technician:	IC: Proj. No.:
MA	18-46

Engineer of Record:

Notes:

REVISIONS

No.	Description	Date	By

Drawing Name:
GENERAL NOTES

FAA A.I.P. Project .:
3-12-0081-029-2018

FDOT Project .:

Date:	Sheet Number:
MAY 2019	G1.3

File Path: Y:\Okaloosa County\VPS (Destin-FWB Airport)\18-46 VPS West Apron\CADD-dwg\005-G2.1-BORING LAYOUT PLAN.dwg Date: 5/14/2019 7:35 AM

DESTIN - FORT WALTON BEACH AIRPORT

OKALOOSA COUNTY

INFRASTRUCTURE CONSULTING & ENGINEERING
5550 WEST IDLEWILD AVE. SUITE 102
TAMPA, FLORIDA 33634 (813) 330-2701
CERTIFICATE OF AUTHORIZATION NO.: 30862

Project Name:
CONSTRUCT WEST APRON EXPANSION AND INFRASTRUCTURE AT VPS

Designer:	Checked by:
HJ	JNG
Technician:	ICE Proj. No.:
MA	18-46

Engineer of Record:

Notes:

REVISIONS

No.	Description	Date	By

Drawing Name:
BORING LAYOUT PLAN

FAA A.I.P. Project No.:
3-12-0081-029-2018

FDOT Project No.:

Date:	Sheet Number:
MAY 2019	G2.1

BORING B-01

DATE STARTED: 7/30/18 | DRILL COMPANY: ERG, Inc.
DATE COMPLETED: 7/30/18 | DRILLER: BK | LOGGED BY: PDK
COMPLETION DEPTH 10.0 ft | DRILL RIG: Kinco
BENCHMARK: N/A | DRILLING METHOD: Solid Flight Auger
ELEVATION: N/A | SAMPLING METHOD: 2-in SS
LATITUDE: | HAMMER TYPE: Safety
LONGITUDE: | EFFICIENCY N/A
STATION: N/A OFFSET: N/A | REVIEWED BY:
REMARKS: *GNE = Groundwater Not Encountered

Water: While Drilling GNE feet; Upon Completion GNE feet; Delay N/A
BORING LOCATION:

Elevation (feet)	Depth, (feet)	Graphic Log	Sample Type	Sample No.	Recovery (inches)	MATERIAL DESCRIPTION	USCS Classification	SPT Blows per 6-inch (SS)	Moisture, %	STANDARD PENETRATION TEST DATA N in blows/ft; Moisture; PL; LL; STRENGTH, tsf: Qu; Qp	Additional Remarks
	0					ASPHALT: 2-1/4 Inches AGGREGATE BASE: 8 Inches	ASPHALT BASE				
						Brown Medium Dense Fine-Grained SAND with Silt	SP-SM	N=19 N=14	4		-200 = 5.8%
	5					Tan/Brown Very Loose to Loose Fine-Grained SAND	SP	N=4 N=6			
	10					Boring Terminated at 10 Feet		N=6			

BORING B-02

DATE STARTED: 7/30/18 | DRILL COMPANY: ERG, Inc.
DATE COMPLETED: 7/30/18 | DRILLER: BK | LOGGED BY: PDK
COMPLETION DEPTH 10.0 ft | DRILL RIG: Kinco
BENCHMARK: N/A | DRILLING METHOD: Solid Flight Auger
ELEVATION: N/A | SAMPLING METHOD: 2-in SS
LATITUDE: | HAMMER TYPE: Safety
LONGITUDE: | EFFICIENCY N/A
STATION: N/A OFFSET: N/A | REVIEWED BY:
REMARKS: *GNE = Groundwater Not Encountered

Water: While Drilling GNE feet; Upon Completion GNE feet; Delay N/A
BORING LOCATION:

Elevation (feet)	Depth, (feet)	Graphic Log	Sample Type	Sample No.	Recovery (inches)	MATERIAL DESCRIPTION	USCS Classification	SPT Blows per 6-inch (SS)	Moisture, %	STANDARD PENETRATION TEST DATA N in blows/ft; Moisture; PL; LL; STRENGTH, tsf: Qu; Qp	Additional Remarks
	0					Brown Very Loose to Loose Fine-Grained SAND with Silt	SP-SM	N=7 N=3	3		-200 = 6.0%
	5					Tan/Brown Very Loose to Loose Fine-Grained SAND	SP	N=3 N=4			
	10					Boring Terminated at 10 Feet		N=7			

BORING B-03

DATE STARTED: 7/30/18 | DRILL COMPANY: ERG, Inc.
DATE COMPLETED: 7/30/18 | DRILLER: BK | LOGGED BY: PDK
COMPLETION DEPTH 10.0 ft | DRILL RIG: Kinco
BENCHMARK: N/A | DRILLING METHOD: Solid Flight Auger
ELEVATION: N/A | SAMPLING METHOD: 2-in SS
LATITUDE: | HAMMER TYPE: Safety
LONGITUDE: | EFFICIENCY N/A
STATION: N/A OFFSET: N/A | REVIEWED BY:
REMARKS: *GNE = Groundwater Not Encountered

Water: While Drilling GNE feet; Upon Completion GNE feet; Delay N/A
BORING LOCATION:

Elevation (feet)	Depth, (feet)	Graphic Log	Sample Type	Sample No.	Recovery (inches)	MATERIAL DESCRIPTION	USCS Classification	SPT Blows per 6-inch (SS)	Moisture, %	STANDARD PENETRATION TEST DATA N in blows/ft; Moisture; PL; LL; STRENGTH, tsf: Qu; Qp	Additional Remarks
	0					Brown Loose to Medium Dense Fine-Grained SAND with Silt	SP-SM	N=11 N=9			
	5					Tan/Brown Very Loose to Loose Fine-Grained SAND	SP	N=4 N=5	3		-200 = 2.4%
	10					Boring Terminated at 10 Feet		N=7			

BORING B-04

DATE STARTED: 7/30/18 | DRILL COMPANY: ERG, Inc.
DATE COMPLETED: 7/30/18 | DRILLER: BK | LOGGED BY: PDK
COMPLETION DEPTH 10.0 ft | DRILL RIG: Kinco
BENCHMARK: N/A | DRILLING METHOD: Solid Flight Auger
ELEVATION: N/A | SAMPLING METHOD: 2-in SS
LATITUDE: | HAMMER TYPE: Safety
LONGITUDE: | EFFICIENCY N/A
STATION: N/A OFFSET: N/A | REVIEWED BY:
REMARKS: *GNE = Groundwater Not Encountered

Water: While Drilling GNE feet; Upon Completion GNE feet; Delay N/A
BORING LOCATION:

Elevation (feet)	Depth, (feet)	Graphic Log	Sample Type	Sample No.	Recovery (inches)	MATERIAL DESCRIPTION	USCS Classification	SPT Blows per 6-inch (SS)	Moisture, %	STANDARD PENETRATION TEST DATA N in blows/ft; Moisture; PL; LL; STRENGTH, tsf: Qu; Qp	Additional Remarks
	0					Brown Loose Fine-Grained SAND with Silt	SP-SM	N=10 N=5			
	5					Tan/Brown Very Loose to Loose Fine-Grained SAND	SP	N=3 N=4	3		-200 = 1.7%
	10					Boring Terminated at 10 Feet		N=5			

BORING B-05

DATE STARTED: 7/30/18 | DRILL COMPANY: ERG, Inc.
DATE COMPLETED: 7/30/18 | DRILLER: BK | LOGGED BY: PDK
COMPLETION DEPTH 10.0 ft | DRILL RIG: Kinco
BENCHMARK: N/A | DRILLING METHOD: Solid Flight Auger
ELEVATION: N/A | SAMPLING METHOD: 2-in SS
LATITUDE: | HAMMER TYPE: Safety
LONGITUDE: | EFFICIENCY N/A
STATION: N/A OFFSET: N/A | REVIEWED BY:
REMARKS: *GNE = Groundwater Not Encountered

Water: While Drilling GNE feet; Upon Completion GNE feet; Delay N/A
BORING LOCATION:

Elevation (feet)	Depth, (feet)	Graphic Log	Sample Type	Sample No.	Recovery (inches)	MATERIAL DESCRIPTION	USCS Classification	SPT Blows per 6-inch (SS)	Moisture, %	STANDARD PENETRATION TEST DATA N in blows/ft; Moisture; PL; LL; STRENGTH, tsf: Qu; Qp	Additional Remarks
	0					Brown Loose to Medium Dense Fine-Grained SAND with Silt	SP-SM	N=10 N=12			
	5					Tan/Brown Very Loose to Loose Fine-Grained SAND	SP	N=3 N=5			
	10					Boring Terminated at 10 Feet		N=7			

BORING B-06

DATE STARTED: 7/30/18 | DRILL COMPANY: ERG, Inc.
DATE COMPLETED: 7/30/18 | DRILLER: BK | LOGGED BY: PDK
COMPLETION DEPTH 10.0 ft | DRILL RIG: Kinco
BENCHMARK: N/A | DRILLING METHOD: Solid Flight Auger
ELEVATION: N/A | SAMPLING METHOD: 2-in SS
LATITUDE: | HAMMER TYPE: Safety
LONGITUDE: | EFFICIENCY N/A
STATION: N/A OFFSET: N/A | REVIEWED BY:
REMARKS: *GNE = Groundwater Not Encountered

Water: While Drilling GNE feet; Upon Completion GNE feet; Delay N/A
BORING LOCATION:

Elevation (feet)	Depth, (feet)	Graphic Log	Sample Type	Sample No.	Recovery (inches)	MATERIAL DESCRIPTION	USCS Classification	SPT Blows per 6-inch (SS)	Moisture, %	STANDARD PENETRATION TEST DATA N in blows/ft; Moisture; PL; LL; STRENGTH, tsf: Qu; Qp	Additional Remarks
	0					Brown Very Loose to Loose Fine-Grained SAND with Silt	SP-SM	N=6 N=3			
	5					Tan/Brown Very Loose to Loose Fine-Grained SAND	SP	N=3 N=4			
	10					Boring Terminated at 10 Feet		N=7			

FLY VPS
DESTIN - FORT WALTON BEACH AIRPORT

OKALOOSA COUNTY

INFRASTRUCTURE CONSULTING & ENGINEERING
5550 WEST IDLEWILD AVE. SUITE 102
TAMPA, FLORIDA 33634 (813) 330-2701
CERTIFICATE OF AUTHORIZATION NO.: 30862

Project Name:
CONSTRUCT WEST APRON EXPANSION AND INFRASTRUCTURE AT VPS

Designer:	Checked by:
HJ	JNG
Technician:	IC Proj. No.:
MA	18-46

Engineer of Record:

Notes:

REVISIONS

No.	Description	Date	By

Drawing Name:
BORING LOG

FAA A.I.P. Project .:
3-12-0081-029-2018

- T Project .:

Date:	Sheet Number:
MAY 2019	G2.2

BORING B-07

DATE STARTED: 7/26/18 | DRILL COMPANY: ERG, Inc.
DATE COMPLETED: 7/26/18 | DRILLER: BK | LOGGED BY: PDK
COMPLETION DEPTH: 10.0 ft | DRILL RIG: Kinco
BENCHMARK: N/A | DRILLING METHOD: Solid Flight Auger
ELEVATION: N/A | SAMPLING METHOD: 2-in SS
LATITUDE: | HAMMER TYPE: Safety
LONGITUDE: | EFFICIENCY: N/A
STATION: N/A | OFFSET: N/A | REVIEWED BY:
REMARKS: *GNE = Groundwater Not Encountered

Water: While Drilling GNE feet; Upon Completion GNE feet; Delay N/A
BORING LOCATION:

Elevation (feet)	Depth, (feet)	Graphic Log	Sample Type	Sample No.	Recovery (inches)	MATERIAL DESCRIPTION	USCS Classification	SPT Blows per 6-inch (SS)	Moisture, %	STANDARD PENETRATION TEST DATA N in blows/ft: Moisture, PL, LL; STRENGTH, tsf: Qu, Qp	Additional Remarks
	0					Brown Very Loose to Loose Fine-Grained SAND with Silt	SP-SM	N=7			
								N=4			
	5					Tan/Brown Loose Fine-Grained SAND	SP	N=7			
								N=5			
	10					Boring Terminated at 10 Feet					

BORING B-08

DATE STARTED: 7/26/18 | DRILL COMPANY: ERG, Inc.
DATE COMPLETED: 7/26/18 | DRILLER: BK | LOGGED BY: PDK
COMPLETION DEPTH: 10.0 ft | DRILL RIG: Kinco
BENCHMARK: N/A | DRILLING METHOD: Solid Flight Auger
ELEVATION: N/A | SAMPLING METHOD: 2-in SS
LATITUDE: | HAMMER TYPE: Safety
LONGITUDE: | EFFICIENCY: N/A
STATION: N/A | OFFSET: N/A | REVIEWED BY:
REMARKS: *GNE = Groundwater Not Encountered

Water: While Drilling GNE feet; Upon Completion GNE feet; Delay N/A
BORING LOCATION:

Elevation (feet)	Depth, (feet)	Graphic Log	Sample Type	Sample No.	Recovery (inches)	MATERIAL DESCRIPTION	USCS Classification	SPT Blows per 6-inch (SS)	Moisture, %	STANDARD PENETRATION TEST DATA N in blows/ft: Moisture, PL, LL; STRENGTH, tsf: Qu, Qp	Additional Remarks
	0					Brown Loose Fine-Grained SAND with Silt	SP-SM	N=8			
								N=7			
	5					Tan/Brown Loose Fine-Grained SAND	SP	N=5			
								N=8			
	10					Boring Terminated at 10 Feet					

BORING B-09

DATE STARTED: 7/26/18 | DRILL COMPANY: ERG, Inc.
DATE COMPLETED: 7/26/18 | DRILLER: BK | LOGGED BY: PDK
COMPLETION DEPTH: 10.0 ft | DRILL RIG: Kinco
BENCHMARK: N/A | DRILLING METHOD: Solid Flight Auger
ELEVATION: N/A | SAMPLING METHOD: 2-in SS
LATITUDE: | HAMMER TYPE: Safety
LONGITUDE: | EFFICIENCY: N/A
STATION: N/A | OFFSET: N/A | REVIEWED BY:
REMARKS: *GNE = Groundwater Not Encountered

Water: While Drilling GNE feet; Upon Completion GNE feet; Delay N/A
BORING LOCATION:

Elevation (feet)	Depth, (feet)	Graphic Log	Sample Type	Sample No.	Recovery (inches)	MATERIAL DESCRIPTION	USCS Classification	SPT Blows per 6-inch (SS)	Moisture, %	STANDARD PENETRATION TEST DATA N in blows/ft: Moisture, PL, LL; STRENGTH, tsf: Qu, Qp	Additional Remarks
	0					Brown Loose Fine-Grained SAND with Silt	SP-SM	N=8			
								N=7			
	5					Tan/Brown Loose Fine-Grained SAND	SP	N=6	5		-200 = 3.0%
								N=8			
	10					Boring Terminated at 10 Feet		N=9			

BORING B-10

DATE STARTED: 7/26/18 | DRILL COMPANY: ERG, Inc.
DATE COMPLETED: 7/26/18 | DRILLER: BK | LOGGED BY: PDK
COMPLETION DEPTH: 10.0 ft | DRILL RIG: Kinco
BENCHMARK: N/A | DRILLING METHOD: Solid Flight Auger
ELEVATION: N/A | SAMPLING METHOD: 2-in SS
LATITUDE: | HAMMER TYPE: Safety
LONGITUDE: | EFFICIENCY: N/A
STATION: N/A | OFFSET: N/A | REVIEWED BY:
REMARKS: *GNE = Groundwater Not Encountered

Water: While Drilling GNE feet; Upon Completion GNE feet; Delay N/A
BORING LOCATION:

Elevation (feet)	Depth, (feet)	Graphic Log	Sample Type	Sample No.	Recovery (inches)	MATERIAL DESCRIPTION	USCS Classification	SPT Blows per 6-inch (SS)	Moisture, %	STANDARD PENETRATION TEST DATA N in blows/ft: Moisture, PL, LL; STRENGTH, tsf: Qu, Qp	Additional Remarks
	0					Brown Loose Fine-Grained SAND with Silt	SP-SM	N=9			
								N=6			
	5					Tan/Brown Very Loose to Loose Fine-Grained SAND	SP	N=2	5		-200 = 4.4%
								N=6			
	10					Boring Terminated at 10 Feet		N=9			

BORING B-11

DATE STARTED: 7/26/18 | DRILL COMPANY: ERG, Inc.
DATE COMPLETED: 7/26/18 | DRILLER: BK | LOGGED BY: PDK
COMPLETION DEPTH: 10.0 ft | DRILL RIG: Kinco
BENCHMARK: N/A | DRILLING METHOD: Solid Flight Auger
ELEVATION: N/A | SAMPLING METHOD: 2-in SS
LATITUDE: | HAMMER TYPE: Safety
LONGITUDE: | EFFICIENCY: N/A
STATION: N/A | OFFSET: N/A | REVIEWED BY:
REMARKS: *GNE = Groundwater Not Encountered

Water: While Drilling GNE feet; Upon Completion GNE feet; Delay N/A
BORING LOCATION:

Elevation (feet)	Depth, (feet)	Graphic Log	Sample Type	Sample No.	Recovery (inches)	MATERIAL DESCRIPTION	USCS Classification	SPT Blows per 6-inch (SS)	Moisture, %	STANDARD PENETRATION TEST DATA N in blows/ft: Moisture, PL, LL; STRENGTH, tsf: Qu, Qp	Additional Remarks
	0					Brown Loose Fine-Grained SAND with Silt	SP-SM	N=9			
								N=6			
	5					Tan/Brown Loose Fine-Grained SAND	SP	N=6	4		-200 = 0.9%
								N=6			
	10					Boring Terminated at 10 Feet		N=10			

BORING B-12

DATE STARTED: 7/26/18 | DRILL COMPANY: ERG, Inc.
DATE COMPLETED: 7/26/18 | DRILLER: BK | LOGGED BY: PDK
COMPLETION DEPTH: 10.0 ft | DRILL RIG: Kinco
BENCHMARK: N/A | DRILLING METHOD: Solid Flight Auger
ELEVATION: N/A | SAMPLING METHOD: 2-in SS
LATITUDE: | HAMMER TYPE: Safety
LONGITUDE: | EFFICIENCY: N/A
STATION: N/A | OFFSET: N/A | REVIEWED BY:
REMARKS: *GNE = Groundwater Not Encountered

Water: While Drilling GNE feet; Upon Completion GNE feet; Delay N/A
BORING LOCATION:

Elevation (feet)	Depth, (feet)	Graphic Log	Sample Type	Sample No.	Recovery (inches)	MATERIAL DESCRIPTION	USCS Classification	SPT Blows per 6-inch (SS)	Moisture, %	STANDARD PENETRATION TEST DATA N in blows/ft: Moisture, PL, LL; STRENGTH, tsf: Qu, Qp	Additional Remarks
	0					Brown Loose Fine-Grained SAND with Silt	SP-SM	N=6			
								N=6			
	5					Tan/Brown Loose Fine-Grained SAND	SP	N=6			
								N=7			
	10					Boring Terminated at 10 Feet		N=7			

DESTIN - FORT WALTON BEACH AIRPORT

OKALOOSA COUNTY

INFRASTRUCTURE CONSULTING & ENGINEERING
5550 WEST IDLEWILD AVE. SUITE 102
TAMPA, FLORIDA 33634 (813) 330-2701
CERTIFICATE OF AUTHORIZATION NO.: 30862

Project Name:
CONSTRUCT WEST APRON EXPANSION AND INFRASTRUCTURE AT VPS

Designer:	Checked by:
HJ	JNG
Technician:	IC= Proj. No.:
MA	18-46

Engineer of Record:

Notes:

REVISIONS

No.	Description	Date	By

Drawing Name:
BORING LOG

FAA A.I.P. Project .:
3-12-0081-029-2018

- T Project .:

Date:	Sheet Number:
MAY 2019	G2.3

BORING B-13

DATE STARTED: 7/30/18 | DRILL COMPANY: ERG, Inc.
DATE COMPLETED: 7/30/18 | DRILLER: BK | LOGGED BY: PDK
COMPLETION DEPTH 10.0 ft | DRILL RIG: Kinco
BENCHMARK: N/A | DRILLING METHOD: Solid Flight Auger
ELEVATION: N/A | SAMPLING METHOD: 2-in SS
LATITUDE: | HAMMER TYPE: Safety
LONGITUDE: | EFFICIENCY N/A
STATION: N/A OFFSET: N/A | REVIEWED BY:
REMARKS: *GNE = Groundwater Not Encountered

Water: While Drilling GNE feet; Upon Completion GNE feet; Delay N/A
BORING LOCATION:

Elevation (feet)	Depth, (feet)	Graphic Log	Sample Type	Sample No.	Recovery (inches)	MATERIAL DESCRIPTION	USCS Classification	SPT Blows per 6-inch (S.S)	Moisture, %	STANDARD PENETRATION TEST DATA N in blows/ft @ Moisture PL LL; STRENGTH, tsf Qu Qp	Additional Remarks
0	0					ASPHALT: 5-1/2' Inches	ASPHALT				
						Brown Very Loose to Loose Fine-Grained SAND with Silt	SP-SM	N=10			
	5					Tan/Brown Very Loose to Loose Fine-Grained SAND	SP	N=5			
								N=4			
								N=5			
	10					Boring Terminated at 10 Feet		N=6			

BORING B-14

DATE STARTED: 7/30/18 | DRILL COMPANY: ERG, Inc.
DATE COMPLETED: 7/30/18 | DRILLER: BK | LOGGED BY: PDK
COMPLETION DEPTH 10.0 ft | DRILL RIG: Kinco
BENCHMARK: N/A | DRILLING METHOD: Solid Flight Auger
ELEVATION: N/A | SAMPLING METHOD: 2-in SS
LATITUDE: | HAMMER TYPE: Safety
LONGITUDE: | EFFICIENCY N/A
STATION: N/A OFFSET: N/A | REVIEWED BY:
REMARKS: *GNE = Groundwater Not Encountered

Water: While Drilling GNE feet; Upon Completion GNE feet; Delay N/A
BORING LOCATION:

Elevation (feet)	Depth, (feet)	Graphic Log	Sample Type	Sample No.	Recovery (inches)	MATERIAL DESCRIPTION	USCS Classification	SPT Blows per 6-inch (S.S)	Moisture, %	STANDARD PENETRATION TEST DATA N in blows/ft @ Moisture PL LL; STRENGTH, tsf Qu Qp	Additional Remarks
0	0					Brown Loose to Medium Dense Fine-Grained SAND with Silt	SP-SM	N=12			
	5					Tan/Brown Loose Fine-Grained SAND	SP	N=10			
								N=5			
								N=6			
	10					Boring Terminated at 10 Feet		N=8			

BORING B-15

DATE STARTED: 7/30/18 | DRILL COMPANY: ERG, Inc.
DATE COMPLETED: 7/30/18 | DRILLER: BK | LOGGED BY: PDK
COMPLETION DEPTH 10.0 ft | DRILL RIG: Kinco
BENCHMARK: N/A | DRILLING METHOD: Solid Flight Auger
ELEVATION: N/A | SAMPLING METHOD: 2-in SS
LATITUDE: | HAMMER TYPE: Safety
LONGITUDE: | EFFICIENCY N/A
STATION: N/A OFFSET: N/A | REVIEWED BY:
REMARKS: *GNE = Groundwater Not Encountered

Water: While Drilling GNE feet; Upon Completion GNE feet; Delay N/A
BORING LOCATION:

Elevation (feet)	Depth, (feet)	Graphic Log	Sample Type	Sample No.	Recovery (inches)	MATERIAL DESCRIPTION	USCS Classification	SPT Blows per 6-inch (S.S)	Moisture, %	STANDARD PENETRATION TEST DATA N in blows/ft @ Moisture PL LL; STRENGTH, tsf Qu Qp	Additional Remarks
0	0					Brown Loose to Medium Dense Fine-Grained SAND with Silt	SP-SM	N=12			
	5					Tan/Brown Loose Fine-Grained SAND	SP	N=9			
								N=6			
								N=5			
	10					Boring Terminated at 10 Feet		N=8			

BORING B-16

DATE STARTED: 7/30/18 | DRILL COMPANY: ERG, Inc.
DATE COMPLETED: 7/30/18 | DRILLER: BK | LOGGED BY: PDK
COMPLETION DEPTH 10.0 ft | DRILL RIG: Kinco
BENCHMARK: N/A | DRILLING METHOD: Solid Flight Auger
ELEVATION: N/A | SAMPLING METHOD: 2-in SS
LATITUDE: | HAMMER TYPE: Safety
LONGITUDE: | EFFICIENCY N/A
STATION: N/A OFFSET: N/A | REVIEWED BY:
REMARKS: *GNE = Groundwater Not Encountered

Water: While Drilling GNE feet; Upon Completion GNE feet; Delay N/A
BORING LOCATION:

Elevation (feet)	Depth, (feet)	Graphic Log	Sample Type	Sample No.	Recovery (inches)	MATERIAL DESCRIPTION	USCS Classification	SPT Blows per 6-inch (S.S)	Moisture, %	STANDARD PENETRATION TEST DATA N in blows/ft @ Moisture PL LL; STRENGTH, tsf Qu Qp	Additional Remarks
0	0					Brown Very Loose to Loose Fine-Grained SAND with Silt	SP-SM	N=7			
								N=4			
	5					Tan/Brown Loose Fine-Grained SAND	SP	N=5	4		
								N=6			
								N=9			
	10					Boring Terminated at 10 Feet					

BORING B-17

DATE STARTED: 7/30/18 | DRILL COMPANY: ERG, Inc.
DATE COMPLETED: 7/30/18 | DRILLER: BK | LOGGED BY: PDK
COMPLETION DEPTH 10.0 ft | DRILL RIG: Kinco
BENCHMARK: N/A | DRILLING METHOD: Solid Flight Auger
ELEVATION: N/A | SAMPLING METHOD: 2-in SS
LATITUDE: | HAMMER TYPE: Safety
LONGITUDE: | EFFICIENCY N/A
STATION: N/A OFFSET: N/A | REVIEWED BY:
REMARKS: *GNE = Groundwater Not Encountered

Water: While Drilling GNE feet; Upon Completion GNE feet; Delay N/A
BORING LOCATION:

Elevation (feet)	Depth, (feet)	Graphic Log	Sample Type	Sample No.	Recovery (inches)	MATERIAL DESCRIPTION	USCS Classification	SPT Blows per 6-inch (S.S)	Moisture, %	STANDARD PENETRATION TEST DATA N in blows/ft @ Moisture PL LL; STRENGTH, tsf Qu Qp	Additional Remarks
0	0					Brown Loose Fine-Grained SAND with Silt	SP-SM	N=9			
								N=6			
	5					Tan/Brown Loose Fine-Grained SAND	SP	N=5	3		
								N=7			
								N=10			
	10					Boring Terminated at 10 Feet					

BORING B-18

DATE STARTED: 7/30/18 | DRILL COMPANY: ERG, Inc.
DATE COMPLETED: 7/30/18 | DRILLER: BK | LOGGED BY: PDK
COMPLETION DEPTH 10.0 ft | DRILL RIG: Kinco
BENCHMARK: N/A | DRILLING METHOD: Solid Flight Auger
ELEVATION: N/A | SAMPLING METHOD: 2-in SS
LATITUDE: | HAMMER TYPE: Safety
LONGITUDE: | EFFICIENCY N/A
STATION: N/A OFFSET: N/A | REVIEWED BY:
REMARKS: *GNE = Groundwater Not Encountered

Water: While Drilling GNE feet; Upon Completion GNE feet; Delay N/A
BORING LOCATION:

Elevation (feet)	Depth, (feet)	Graphic Log	Sample Type	Sample No.	Recovery (inches)	MATERIAL DESCRIPTION	USCS Classification	SPT Blows per 6-inch (S.S)	Moisture, %	STANDARD PENETRATION TEST DATA N in blows/ft @ Moisture PL LL; STRENGTH, tsf Qu Qp	Additional Remarks
0	0					Brown Very Loose to Loose Fine-Grained SAND with Silt	SP-SM	N=5			
								N=3			
	5					Tan/Brown Loose to Medium Dense Fine-Grained SAND	SP	N=5			
								N=7			
								N=11			
	10					Boring Terminated at 10 Feet					

FLY VPS
DESTIN - FORT WALTON BEACH AIRPORT

OKALOOSA COUNTY

INFRASTRUCTURE CONSULTING & ENGINEERING
5550 WEST IDLEWILD AVE. SUITE 102
TAMPA, FLORIDA 33634 (813) 330-2701
CERTIFICATE OF AUTHORIZATION NO.: 30862

Project Name:
CONSTRUCT WEST APRON EXPANSION AND INFRASTRUCTURE AT VPS

Designer:	Checked by:
HJ	JNG
Technician:	IC= Proj. No.:
MA	18-46

Engineer of Record:

Notes:

REVISIONS

No.	Description	Date	By

Drawing Name:
BORING LOG

FAA A.I.P. Project .:
3-12-0081-029-2018

- T Project .:

Date:	Sheet Number:
MAY 2019	G2.4

BORING C-02

DATE STARTED: 8/1/18 | DRILL COMPANY: PSI, Inc.
DATE COMPLETED: 8/1/18 | DRILLER: TC | LOGGED BY: PDK
COMPLETION DEPTH 5.0 ft | DRILL RIG: Hand Auger
BENCHMARK: N/A | DRILLING METHOD: Hand Auger
ELEVATION: N/A | SAMPLING METHOD:
LATITUDE: | HAMMER TYPE:
LONGITUDE: | EFFICIENCY N/A
STATION: N/A OFFSET: N/A | REVIEWED BY:
REMARKS: *GNE = Groundwater Not Encountered

Water: While Drilling GNE feet; Upon Completion GNE feet; Delay N/A
BORING LOCATION:

Elevation (feet)	Depth, (feet)	Graphic Log	Sample Type	Sample No.	Recovery (inches)	MATERIAL DESCRIPTION	USCS Classification	Moisture, %	STANDARD PENETRATION TEST DATA N in blows/ft; Moisture; PL; LL; STRENGTH, tsf Qu Qp	Additional Remarks
	0					ASPHALT: 3 Inches	ASPHALT			
						GRAVEL BASE: 6 Inches	BASE			
						Brown Fine-Grained SAND with Silt				
							SP-SM			
	5					Boring Terminated at 5 Feet				

BORING C-03

DATE STARTED: 8/1/18 | DRILL COMPANY: PSI, Inc.
DATE COMPLETED: 8/1/18 | DRILLER: TC | LOGGED BY: PDK
COMPLETION DEPTH 5.0 ft | DRILL RIG: Hand Auger
BENCHMARK: N/A | DRILLING METHOD: Hand Auger
ELEVATION: N/A | SAMPLING METHOD:
LATITUDE: | HAMMER TYPE:
LONGITUDE: | EFFICIENCY N/A
STATION: N/A OFFSET: N/A | REVIEWED BY:
REMARKS: *GNE = Groundwater Not Encountered

Water: While Drilling GNE feet; Upon Completion GNE feet; Delay N/A
BORING LOCATION:

Elevation (feet)	Depth, (feet)	Graphic Log	Sample Type	Sample No.	Recovery (inches)	MATERIAL DESCRIPTION	USCS Classification	Moisture, %	STANDARD PENETRATION TEST DATA N in blows/ft; Moisture; PL; LL; STRENGTH, tsf Qu Qp	Additional Remarks
	0					ASPHALT: 3 Inches	ASPHALT			
						GRAVEL BASE: 6 Inches	BASE			
						Brown Fine-Grained SAND with Silt				
							SP-SM			
	5					Boring Terminated at 5 Feet				

BORING C-04

DATE STARTED: 8/1/18 | DRILL COMPANY: PSI, Inc.
DATE COMPLETED: 8/1/18 | DRILLER: TC | LOGGED BY: PDK
COMPLETION DEPTH 5.0 ft | DRILL RIG: Hand Auger
BENCHMARK: N/A | DRILLING METHOD: Hand Auger
ELEVATION: N/A | SAMPLING METHOD:
LATITUDE: | HAMMER TYPE:
LONGITUDE: | EFFICIENCY N/A
STATION: N/A OFFSET: N/A | REVIEWED BY:
REMARKS: *GNE = Groundwater Not Encountered

Water: While Drilling GNE feet; Upon Completion GNE feet; Delay N/A
BORING LOCATION:

Elevation (feet)	Depth, (feet)	Graphic Log	Sample Type	Sample No.	Recovery (inches)	MATERIAL DESCRIPTION	USCS Classification	Moisture, %	STANDARD PENETRATION TEST DATA N in blows/ft; Moisture; PL; LL; STRENGTH, tsf Qu Qp	Additional Remarks
	0					ASPHALT: 3 Inches	ASPHALT			
						GRAVEL BASE: 4 Inches	BASE			
						Brown Fine-Grained SAND with Silt				
							SP-SM			
	5					Boring Terminated at 5 Feet				

BORING C-05

DATE STARTED: 8/1/18 | DRILL COMPANY: PSI, Inc.
DATE COMPLETED: 8/1/18 | DRILLER: TC | LOGGED BY: PDK
COMPLETION DEPTH 5.0 ft | DRILL RIG: Hand Auger
BENCHMARK: N/A | DRILLING METHOD: Hand Auger
ELEVATION: N/A | SAMPLING METHOD:
LATITUDE: | HAMMER TYPE:
LONGITUDE: | EFFICIENCY N/A
STATION: N/A OFFSET: N/A | REVIEWED BY:
REMARKS: *GNE = Groundwater Not Encountered

Water: While Drilling GNE feet; Upon Completion GNE feet; Delay N/A
BORING LOCATION:

Elevation (feet)	Depth, (feet)	Graphic Log	Sample Type	Sample No.	Recovery (inches)	MATERIAL DESCRIPTION	USCS Classification	Moisture, %	STANDARD PENETRATION TEST DATA N in blows/ft; Moisture; PL; LL; STRENGTH, tsf Qu Qp	Additional Remarks
	0					ASPHALT: 3 Inches	ASPHALT			
						GRAVEL BASE: 5 Inches	BASE			
						Brown Fine-Grained SAND with Silt				
							SP-SM			
	5					Boring Terminated at 5 Feet				

BORING C-06

DATE STARTED: 8/2/18 | DRILL COMPANY: PSI, Inc.
DATE COMPLETED: 8/2/18 | DRILLER: TC | LOGGED BY: PDK
COMPLETION DEPTH 5.0 ft | DRILL RIG: Hand Auger
BENCHMARK: N/A | DRILLING METHOD: Hand Auger
ELEVATION: N/A | SAMPLING METHOD:
LATITUDE: | HAMMER TYPE:
LONGITUDE: | EFFICIENCY N/A
STATION: N/A OFFSET: N/A | REVIEWED BY:
REMARKS: *GNE = Groundwater Not Encountered

Water: While Drilling GNE feet; Upon Completion GNE feet; Delay N/A
BORING LOCATION:

Elevation (feet)	Depth, (feet)	Graphic Log	Sample Type	Sample No.	Recovery (inches)	MATERIAL DESCRIPTION	USCS Classification	Moisture, %	STANDARD PENETRATION TEST DATA N in blows/ft; Moisture; PL; LL; STRENGTH, tsf Qu Qp	Additional Remarks
	0					ASPHALT: 8 Inches	ASPHALT			
						GRAVEL BASE: 7 Inches	BASE			
						Brown Fine-Grained SAND with Silt				
							SP-SM			
	5					Boring Terminated at 5 Feet				

BORING C-07

DATE STARTED: 8/2/18 | DRILL COMPANY: PSI, Inc.
DATE COMPLETED: 8/2/18 | DRILLER: TC | LOGGED BY: PDK
COMPLETION DEPTH 5.0 ft | DRILL RIG: Hand Auger
BENCHMARK: N/A | DRILLING METHOD: Hand Auger
ELEVATION: N/A | SAMPLING METHOD:
LATITUDE: | HAMMER TYPE:
LONGITUDE: | EFFICIENCY N/A
STATION: N/A OFFSET: N/A | REVIEWED BY:
REMARKS: *GNE = Groundwater Not Encountered

Water: While Drilling GNE feet; Upon Completion GNE feet; Delay N/A
BORING LOCATION:

Elevation (feet)	Depth, (feet)	Graphic Log	Sample Type	Sample No.	Recovery (inches)	MATERIAL DESCRIPTION	USCS Classification	Moisture, %	STANDARD PENETRATION TEST DATA N in blows/ft; Moisture; PL; LL; STRENGTH, tsf Qu Qp	Additional Remarks
	0					ASPHALT: 7.5 Inches	ASPHALT			
						GRAVEL BASE: 6 Inches	BASE			
						Brown Fine-Grained SAND with Silt				
							SP-SM			
	5					Boring Terminated at 5 Feet				

FLY VPS
DESTIN - FORT WALTON BEACH AIRPORT

OKALOOSA COUNTY

INFRASTRUCTURE CONSULTING & ENGINEERING
5550 WEST IDLEWILD AVE. SUITE 102
TAMPA, FLORIDA 33634 (813) 330-2701
CERTIFICATE OF AUTHORIZATION NO.: 30862

Project Name:
CONSTRUCT WEST APRON EXPANSION AND INFRASTRUCTURE AT VPS

Designer:	Checked by:
HJ	JNG
Technician:	IC= Proj. No.:
MA	18-46

Engineer of Record:

Notes:

REVISIONS

No.	Description	Date	By

Drawing Name:
BORING LOG

FAA A.I.P. Project .:
3-12-0081-029-2018

- T Project .:

Date:	Sheet Number:
MAY 2019	G2.5

BORING C-08

DATE STARTED: 8/2/18 | DRILL COMPANY: PSI, Inc.
DATE COMPLETED: 8/2/18 | DRILLER: TC | LOGGED BY: PDK
COMPLETION DEPTH 5.0 ft | DRILL RIG: Hand Auger
BENCHMARK: N/A | DRILLING METHOD: Hand Auger
ELEVATION: N/A | SAMPLING METHOD:
LATITUDE: | HAMMER TYPE:
LONGITUDE: | EFFICIENCY N/A
STATION: N/A OFFSET: N/A | REVIEWED BY:
REMARKS: *GNE = Groundwater Not Encountered

Water: While Drilling GNE feet; Upon Completion GNE feet; Delay N/A
BORING LOCATION:

Elevation (feet)	Depth, (feet)	Graphic Log	Sample Type	Sample No.	Recovery (inches)	MATERIAL DESCRIPTION	USCS Classification	Moisture, %	STANDARD PENETRATION TEST DATA N in blows/ft; Moisture; PL; LL; STRENGTH, tsf Qu; Qp	Additional Remarks
	0					ASPHALT: 7.5 Inches	ASPHALT			
						GRAVEL BASE: 6 Inches	BASE			
						Brown Fine-Grained SAND with Silt	SP-SM			
	5					Boring Terminated at 5 Feet				

BORING C-09

DATE STARTED: 8/2/18 | DRILL COMPANY: PSI, Inc.
DATE COMPLETED: 8/2/18 | DRILLER: TC | LOGGED BY: PDK
COMPLETION DEPTH 5.0 ft | DRILL RIG: Hand Auger
BENCHMARK: N/A | DRILLING METHOD: Hand Auger
ELEVATION: N/A | SAMPLING METHOD:
LATITUDE: | HAMMER TYPE:
LONGITUDE: | EFFICIENCY N/A
STATION: N/A OFFSET: N/A | REVIEWED BY:
REMARKS: *GNE = Groundwater Not Encountered

Water: While Drilling GNE feet; Upon Completion GNE feet; Delay N/A
BORING LOCATION:

Elevation (feet)	Depth, (feet)	Graphic Log	Sample Type	Sample No.	Recovery (inches)	MATERIAL DESCRIPTION	USCS Classification	Moisture, %	STANDARD PENETRATION TEST DATA N in blows/ft; Moisture; PL; LL; STRENGTH, tsf Qu; Qp	Additional Remarks
	0					ASPHALT: 16 Inches	ASPHALT			
						GRAVEL BASE: 10 Inches	BASE			
						Brown Fine-Grained SAND with Silt	SP-SM			
	5					Boring Terminated at 5 Feet				

BORING C-10

DATE STARTED: 8/2/18 | DRILL COMPANY: PSI, Inc.
DATE COMPLETED: 8/2/18 | DRILLER: TC | LOGGED BY: PDK
COMPLETION DEPTH 5.0 ft | DRILL RIG: Hand Auger
BENCHMARK: N/A | DRILLING METHOD: Hand Auger
ELEVATION: N/A | SAMPLING METHOD:
LATITUDE: | HAMMER TYPE:
LONGITUDE: | EFFICIENCY N/A
STATION: N/A OFFSET: N/A | REVIEWED BY:
REMARKS: *GNE = Groundwater Not Encountered

Water: While Drilling GNE feet; Upon Completion GNE feet; Delay N/A
BORING LOCATION:

Elevation (feet)	Depth, (feet)	Graphic Log	Sample Type	Sample No.	Recovery (inches)	MATERIAL DESCRIPTION	USCS Classification	Moisture, %	STANDARD PENETRATION TEST DATA N in blows/ft; Moisture; PL; LL; STRENGTH, tsf Qu; Qp	Additional Remarks
	0					ASPHALT: 9 Inches	ASPHALT			
						GRAVEL BASE: 8 Inches	BASE			
						Brown Fine-Grained SAND with Silt	SP-SM			
	5					Boring Terminated at 5 Feet				

BORING C-11

DATE STARTED: 8/2/18 | DRILL COMPANY: PSI, Inc.
DATE COMPLETED: 8/2/18 | DRILLER: TC | LOGGED BY: PDK
COMPLETION DEPTH 5.0 ft | DRILL RIG: Hand Auger
BENCHMARK: N/A | DRILLING METHOD: Hand Auger
ELEVATION: N/A | SAMPLING METHOD:
LATITUDE: | HAMMER TYPE:
LONGITUDE: | EFFICIENCY N/A
STATION: N/A OFFSET: N/A | REVIEWED BY:
REMARKS: *GNE = Groundwater Not Encountered

Water: While Drilling GNE feet; Upon Completion GNE feet; Delay N/A
BORING LOCATION:

Elevation (feet)	Depth, (feet)	Graphic Log	Sample Type	Sample No.	Recovery (inches)	MATERIAL DESCRIPTION	USCS Classification	Moisture, %	STANDARD PENETRATION TEST DATA N in blows/ft; Moisture; PL; LL; STRENGTH, tsf Qu; Qp	Additional Remarks
	0					ASPHALT: 9 Inches	ASPHALT			
						CONCRETE: 4.5 Inches	CONCRETE			
						GRAVEL BASE: 6.5 Inches	BASE			
						Brown Fine-Grained SAND with Silt	SP-SM			
	5					Boring Terminated at 5 Feet				

BORING C-12

DATE STARTED: 8/2/18 | DRILL COMPANY: PSI, Inc.
DATE COMPLETED: 8/2/18 | DRILLER: TC | LOGGED BY: PDK
COMPLETION DEPTH 5.0 ft | DRILL RIG: Hand Auger
BENCHMARK: N/A | DRILLING METHOD: Hand Auger
ELEVATION: N/A | SAMPLING METHOD:
LATITUDE: | HAMMER TYPE:
LONGITUDE: | EFFICIENCY N/A
STATION: N/A OFFSET: N/A | REVIEWED BY:
REMARKS: *GNE = Groundwater Not Encountered

Water: While Drilling GNE feet; Upon Completion GNE feet; Delay N/A
BORING LOCATION:

Elevation (feet)	Depth, (feet)	Graphic Log	Sample Type	Sample No.	Recovery (inches)	MATERIAL DESCRIPTION	USCS Classification	Moisture, %	STANDARD PENETRATION TEST DATA N in blows/ft; Moisture; PL; LL; STRENGTH, tsf Qu; Qp	Additional Remarks
	0					ASPHALT: 9.5 Inches	ASPHALT			
						GRAVEL BASE: 7.5 Inches	BASE			
						Brown Fine-Grained SAND with Silt	SP-SM			
	5					Boring Terminated at 5 Feet				

BORING C-13

DATE STARTED: 8/2/18 | DRILL COMPANY: PSI, Inc.
DATE COMPLETED: 8/2/18 | DRILLER: TC | LOGGED BY: PDK
COMPLETION DEPTH 5.0 ft | DRILL RIG: Hand Auger
BENCHMARK: N/A | DRILLING METHOD: Hand Auger
ELEVATION: N/A | SAMPLING METHOD:
LATITUDE: | HAMMER TYPE:
LONGITUDE: | EFFICIENCY N/A
STATION: N/A OFFSET: N/A | REVIEWED BY:
REMARKS: *GNE = Groundwater Not Encountered

Water: While Drilling GNE feet; Upon Completion GNE feet; Delay N/A
BORING LOCATION:

Elevation (feet)	Depth, (feet)	Graphic Log	Sample Type	Sample No.	Recovery (inches)	MATERIAL DESCRIPTION	USCS Classification	Moisture, %	STANDARD PENETRATION TEST DATA N in blows/ft; Moisture; PL; LL; STRENGTH, tsf Qu; Qp	Additional Remarks
	0					ASPHALT: 8 Inches	ASPHALT			
						CONCRETE: 6.5 Inches	CONCRETE			
						ASPHALT: 6 Inches	ASPHALT			
						GRAVEL BASE: 5.5 Inches	BASE			
						Brown Fine-Grained SAND with Silt	SP-SM			
	5					Boring Terminated at 5 Feet				

FLY VPS
DESTIN - FORT WALTON BEACH AIRPORT

OKALOOSA COUNTY

INFRASTRUCTURE CONSULTING & ENGINEERING
5550 WEST IDLEWILD AVE. SUITE 102
TAMPA, FLORIDA 33634 (813) 330-2701
CERTIFICATE OF AUTHORIZATION NO.: 30862

Project Name:
CONSTRUCT WEST APRON EXPANSION AND INFRASTRUCTURE AT VPS

Designer:	Checked by:
HJ	JNG
Technician:	IC Proj. No.:
MA	18-46

Engineer of Record:

Notes:

REVISIONS

No.	Description	Date	By

Drawing Name:
BORING LOG

FAA A.I.P. Project .:
3-12-0081-029-2018

FDOT Project .:

Date:	Sheet Number:
MAY 2019	G2.6

Construction Schedule

ACTIVITY	DURATION (calendar days from NTP)
Construction	
Phase 1 Expansion of Credit Card Parking Lot (West and North)	120
Phase 2 Clear trees, Construct water, sewer and lift station. Apron storm drainage.	350
Phase 3 Demo SE portion of credit card lot. Complete waterline construction. Construct canopies/ walkways	
Phase 4 Construct all apron pavement (concrete and asphalt).	
Substantial Completion	350
Punch List	380

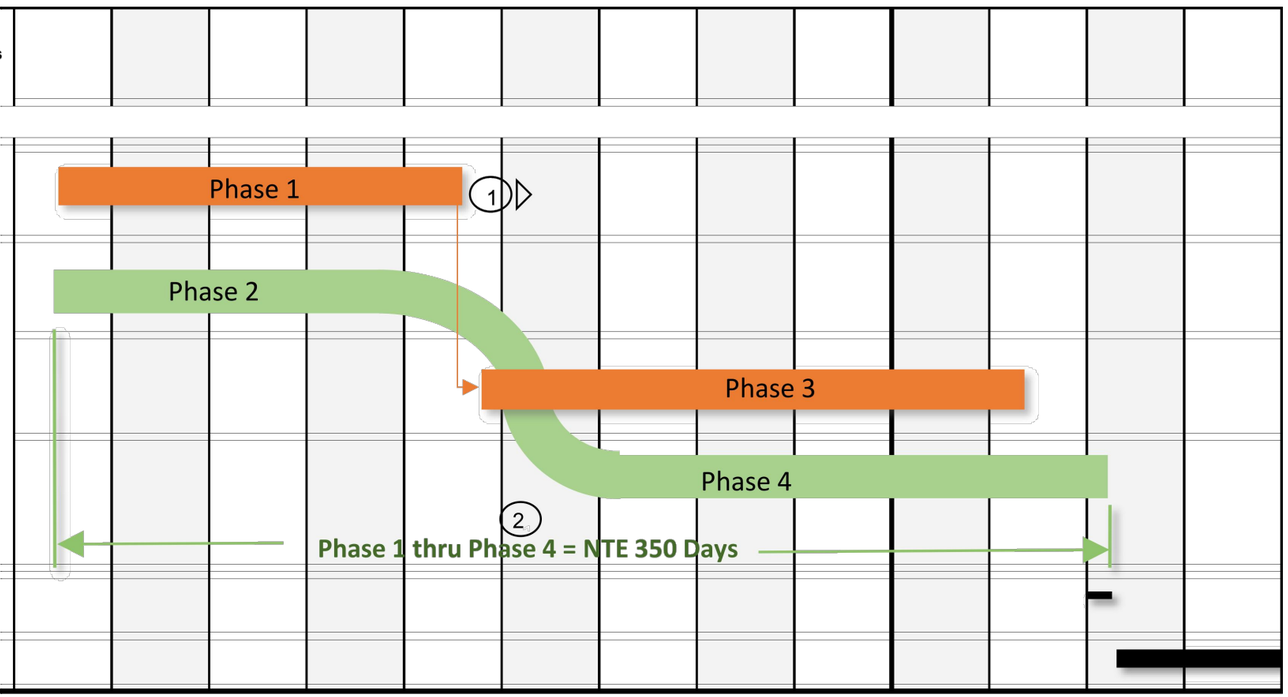

Total Phases 1-4 = 350

Total Contract Time (including punch list) = 380

Notes:

1) Additional Spaces for Credit Card lot become available

2) Liquidated Damages (LD's) as specified in the contract documents, will be assessed for failure to complete the following phases and milestones:

Phase 1 = 120 days from Notice to Proceed

Total Contract = 350 Days from NTP.

Punch List = 30 Days

PROJECT EARTH WORK SUMMARY			
	TOPSOIL STRIPPING	EXCAVATION	EMBANKMENT IN PLACE
CREDIT CARD PARKING LOT (PHASE I)	1,795 C.Y.	2,080 C.Y.	5,300 C.Y.
OUTSIDE OF EXISTING SIDA FENCE (PHASE II)		5,850 C.Y.	3,840 C.Y.
TOTAL PROJECT EARTH WORK	4,865 C.Y.	16,815 C.Y.	10,080 C.Y.

NOTE:
STRIPPING AND EXCAVATION QUANTITIES ARE MEASURED IN THEIR ORIGINAL POSITION AT THE JOB SITE.

FLY VPS

DESTIN - FORT WALTON BEACH AIRPORT

OKALOOSA COUNTY

INFRASTRUCTURE CONSULTING & ENGINEERING
5550 WEST IDLEWILD AVE. SUITE 102
TAMPA, FLORIDA 33634 (813) 330-2701
CERTIFICATE OF AUTHORIZATION NO.: 30862

Project Name:
CONSTRUCT WEST APRON EXPANSION AND INFRASTRUCTURE AT VPS

Designer:	Checked by:
HJ	JNG
Technician:	ICE Proj. No.:
MA	18-46

Engineer of Record:

Notes:

REVISIONS

No.	Description	Date	By

Drawing Name:
CONSTRUCTION SCHEDULE

FAA A.I.P. Project No.:
3-12-0081-029-2018

FDOT Project No.:

Date:	Sheet number:
MAY 2019	G3.0

SEE SHEET G1.1 FOR ENTRANCE OFF OF SR 85

0 30 60 120

PARKING LOT EXPANSION

INSTALL HIGH PROFILE BARRICADES

CREDIT CARD PUBLIC PARKING

INSTALL HIGH PROFILE BARRICADES

CONTRACTOR'S ACCESS AND HAUL ROUTE FOR PHASE 1

EXIST. WEST ACCESS GATE

TERMINAL

TEMP. FENCE TO BE INSTALLED PRIOR TO BEGINNING ANY OTHER WORK.

CONTRACTOR'S STAGING AND STOCK PILE AREA

INSTALL 15' DBL. SWING GATE FOR SIDA ACCESS AND VEHICLE INSPECTION POINT. VEHICLES MUST BE INSPECTED PRIOR TO ENTERING THE SIDA. CONTRACTOR TO ASSIGN PERSONNEL TO PERFORM VEHICLE INSPECTION. INSPECTIONS TO BE PERFORMED IN ACCORDANCE WITH TSA REQUIREMENTS. KEEP GATE SECURE AT ALL TIMES.

EXIST. LAVATORY CART DUMP STATION MUST REMAIN IN SERVICE UNTIL DUMP STATION NO.2 (SEE SHEET C8.3) HAS BEEN COMPLETED AND IS IN SERVICE.

EXIST. LIFT STATION , 2" AND 6" FORCE MAINS AND 12" WATER MAIN TO REMAIN IN SERVICE UNTIL WATER AND SANITARY SEWER RELOCATION WORK IS COMPLETE. SEE SHEETSC8.1 AND C8.2 FOR ADDITIONAL REQUIREMENTS

AOA/SIDA TO REMAIN SECURE AT ALL TIMES. EXISTING FENCE NOT TO BE REMOVED UNTIL NEW FENCE OR TEMPORARY FENCE HAS BEEN INSTALLED. SEE PHASE 3 ON SHEET G3.2.

INSTALL LOW PROFILE BARRICADES ALONG THE EDGE OF THE EXISTING TAXILANE PRIOR TO BEGINNING WORK IN THE TOFA AND LEAVE IN PLACE UNTIL PHASE 4 IS COMPLETE.

TEMP. 36" CULVERT (COST TO BE INCIDENTAL TO ITEM C-105-MOBILIZATION)

LIMITS OF PROJECT

TAXILANE OBJECT FREE AREA (TOFA) LIMIT. WORK IN THE TOFA CAN ONLY BE PERFORMED ON A PULL-BACK BASIS OR AT NIGHT. ALL PERSONNEL AND EQUIPMENT MUST PULL BACK OUTSIDE THE TOFA WHEN AN AIRCRAFT IS OPERATING ON THE TAXILANE.

PERMANENT AOA/SIDA FENCE

CONNECT TEMPORARY FENCE TO PERMANENT FENCE

CONNECT TEMPORARY FENCE TO EXIST. FENCE

INSTALL NEW 15' WIDE DBL. SWING GATE FOR SIDA ACESS AND VEHICLE INSPECTION POINT UNTIL PERMANENT FENCE IS INSTALLED

LEGEND

PHASE 1
WORK IN PHASE 1 CONSISTS OF:
CONSTRUCTION OF THE PARKING LOT EXPANSION INCLUDING THE RETAINING WALL, LIGHTING, SIGNAGE, LANDSCAPING, IRRIGATION AND PAVEMENT MARKING. **PRIOR TO BEGINNING ANY LAND DISTURBING ACTIVITIES IN PHASE I THE CONTRACTOR IS TO PERFORM A PRE-CONSTRUCTION SURVEY OF THE AREA WITHIN THE LIMITSOF GRADING FOR PHASE I AS PRESCRIBED IN PARAGRAPH 152-2.1 IN ITEM P-152.**

PHASE 2
WORK IN PHASE 2 CONSISTS OF:
CLEARING AND GRUBBING, ROUGH GRADING, DEMOLITION, WATER AND SANITARY SEWER RELOCATION WORK INCLUDING RELOCATION OF THE LIFT STATION. WORK IN PHASE 2 MAY BE PERFORMED CONCURRENTLY WITH PHASES 1 AND 3. EXISTING HIGH MAST LIGHTS NOT TO BE TAKEN OUT OF SERVICE UNTIL NEW HIGH MAST LIGHTS ARE INSTALLED AND OPERATIONAL.

PHASE 3
WORK IN PHASE 3 CONSISTS OF:
DEMOLITION OFTHE EXISTING PARKING LOT PAVEMENT, CONCRETE SIDEWALK AND CURB, CANOPY STRUCTURE, WATERLINE RELOCATION AND DEMOLITION AND UG ELECTRICAL DEMOLITION. PHASE 3 DEMOLITION CANNOT BEGIN UNTIL THE PHASE 1 PARKING LOT EXPANSION WORK IS COMPLETE AND READY FOR USE BY THE OWNER.

STAGING AREA

CONTRACTOR ACCESS/ HAUL ROUTE

File Path: Y:\Okaloosa County\VPS (Destin-FWB Airport)\18-46 VPS West Apron\CADD-dwg\007-G3.1-CONSTRUCTION SAFETY AND PHASING PLAN.dwg Date: 5/15/2019 2:40 PM

DESTIN - FORT WALTON BEACH AIRPORT

OKALOOSA COUNTY

INFRASTRUCTURE CONSULTING & ENGINEERING
5550 WEST IDLEWILD AVE. SUITE 102
TAMPA, FLORIDA 33634 (813) 330-2701
CERTIFICATE OF AUTHORIZATION NO.: 30862

Project Name:
CONSTRUCT WEST APRON EXPANSION AND INFRASTRUCTURE AT VPS

Designer:	Checked by:
HJ	JNG
Technician:	ICE Proj. No.:
MA	18-46

Engineer of Record:

Notes:

REVISIONS

No.	Description	Date	By

Drawing Name:
CONSTRUCTION SAFETY AND PHASING PLAN

FAA A.I.P. Project No.:
3-12-0081-029-2018

FDOT Project No.:

Date: MAY 2019

Sheet Number: G3.1

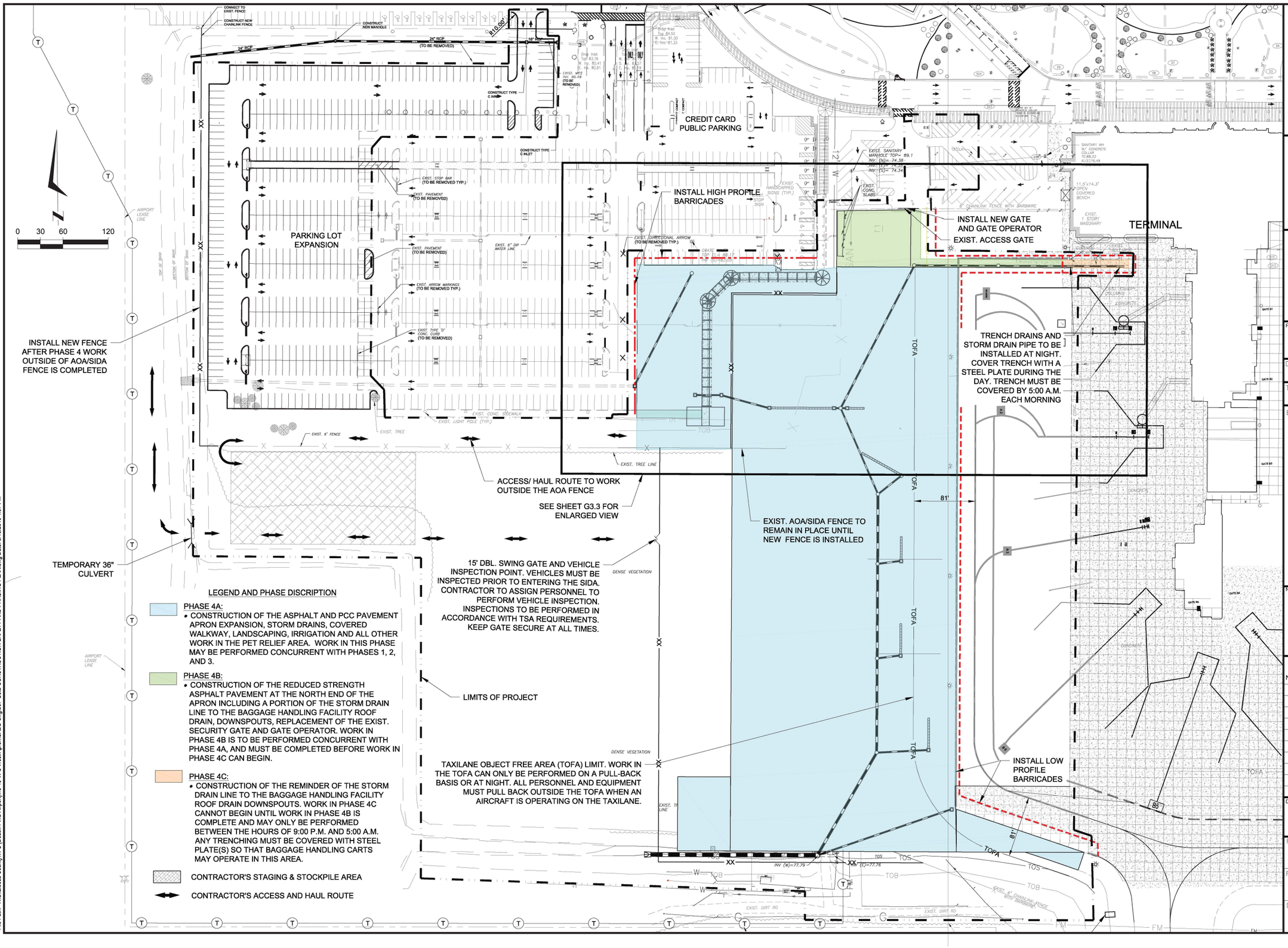

File Path: Y:\Okaloosa County\VPS (Destin-FWB Airport)\18-46 VPS West Apron\CADD-dwg\007-G3.2-CONSTRUCTION SAFETY AND PHASING PLAN.dwg Date: 5/15/2019 4:37 PM

FLY VPS

DESTIN - FORT WALTON BEACH AIRPORT

OKALOOSA COUNTY

INFRASTRUCTURE CONSULTING & ENGINEERING
5550 WEST IDLEWILD AVE. SUITE 102
TAMPA, FLORIDA 33634 (813) 330-2701
CERTIFICATE OF AUTHORIZATION NO.: 30862

Project Name:
CONSTRUCT WEST APRON EXPANSION AND INFRASTRUCTURE AT VPS

Designer:	Checked by:
HJ	JNG
Technician:	ICE Proj. No.:
MA	18-46

Engineer of Record:

Notes:

REVISIONS

No.	Description	Date	By

Drawing Name:
CONSTRUCTION SAFETY AND PHASING PLAN

FAA A.I.P. Project No.:
3-12-0081-029-2018

FDOT Project No.:

Date:	Sheet Number:
MAY 2019	G3.2

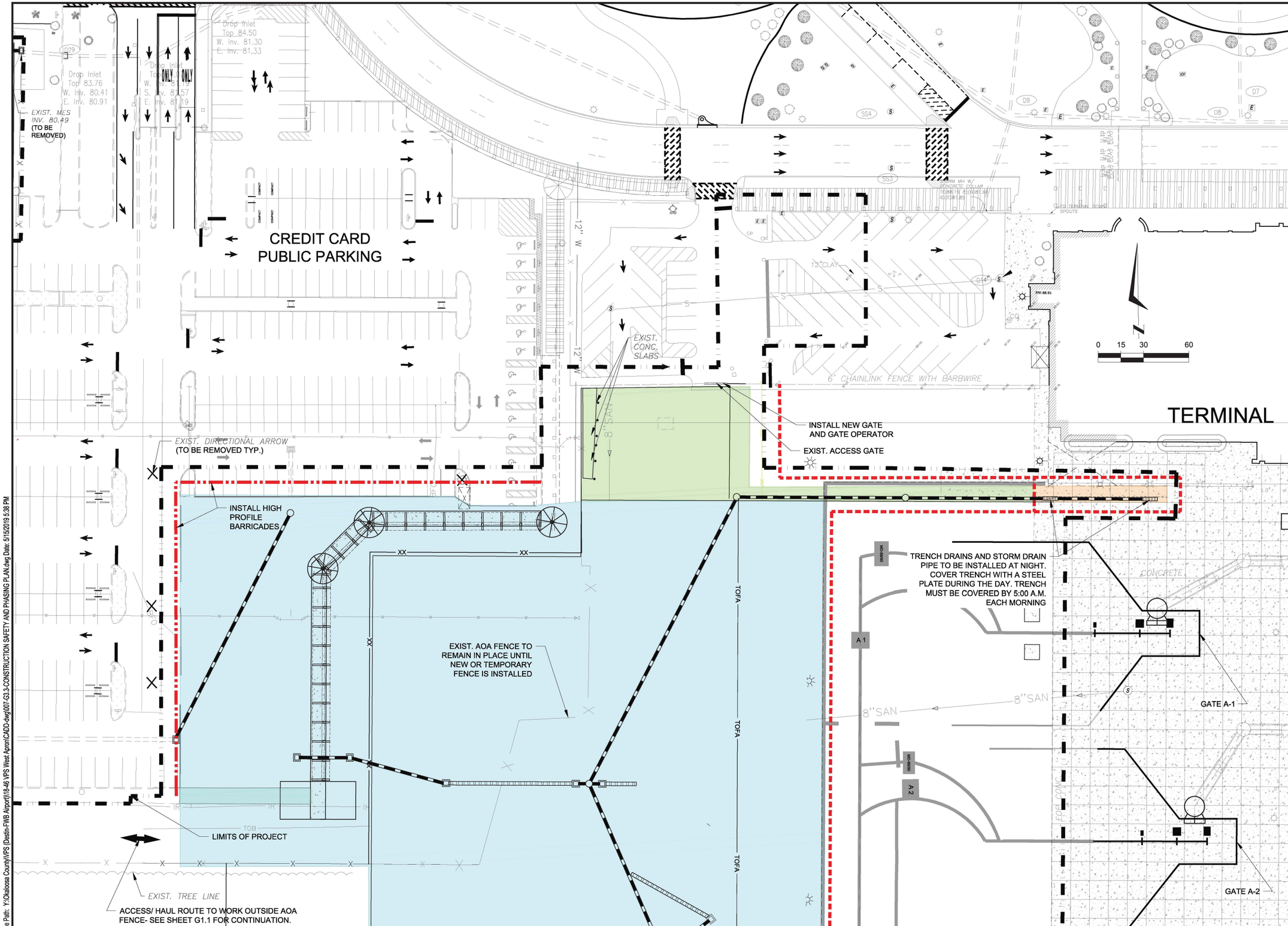

File Path: Y:\Okaloosa County\VPS (Destin-FWB Airport)\18-46 VPS West Apron\CADD-dwg\007-G3.3-CONSTRUCTION SAFETY AND PHASING PLAN.dwg Date: 5/15/2019 5:38 PM

FLY VPS

DESTIN - FORT
WALTON BEACH
AIRPORT

OKALOOSA COUNTY

INFRASTRUCTURE
CONSULTING & ENGINEERING
5550 WEST IDLEWILD AVE. SUITE 102
TAMPA, FLORIDA 33634 (813) 330-2701
CERTIFICATE OF AUTHORIZATION NO.: 30862

Project Name:
CONSTRUCT WEST APRON EXPANSION AND INFRASTRUCTURE AT VPS

Designer:	Checked by:
HJ	JNG
Technician:	ICE Proj. No.:
MA	18-46

Engineer of Record:

Notes:

REVISIONS

No.	Description	Date	By

Drawing Name:
CONSTRUCTION SAFETY AND PHASING PLAN

FAA A.I.P. Project No.:
3-12-0081-029-2018

FDOT Project No.:

Date:	Sheet Number:
MAY 2019	G3.3

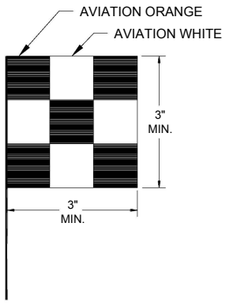

CONSTRUCTION SAFETY FLAG

NOTE:
SAFETY FLAG SHALL BE PROMINENTLY DISPLAYED ON ALL CONSTRUCTION EQUIPMENT. AN AMBER FLASHING LIGHT IS REQUIRED FOR NIGHT WORK AND MAY BE SUBSTITUTED FOR THE FLAG DURING THE DAY.

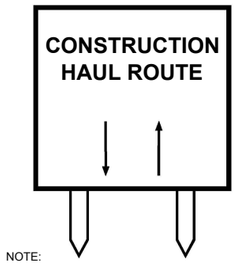

NOTE:
PLACE AT 50' INTERVALS ALONG HAUL ROUTES OR AS DIRECTED BY THE RPR.

CONSTRUCTION HAUL ROUTE SIGN

N.T.S.

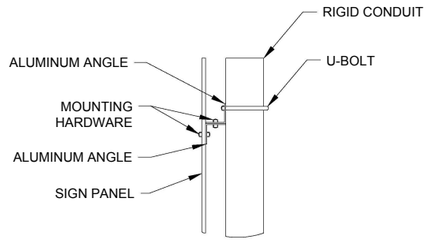

SIGN MOUNTING DETAIL

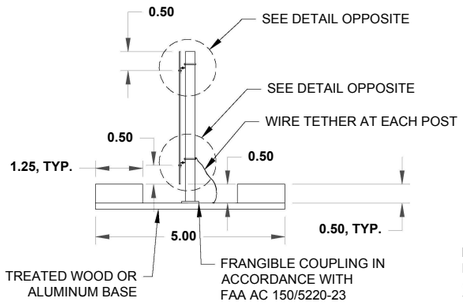

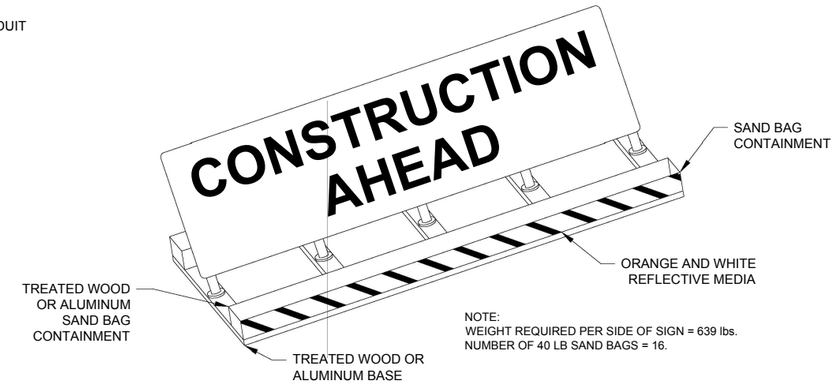

NOTE:
WEIGHT REQUIRED PER SIDE OF SIGN = 639 lbs.
NUMBER OF 40 LB SAND BAGS = 16.

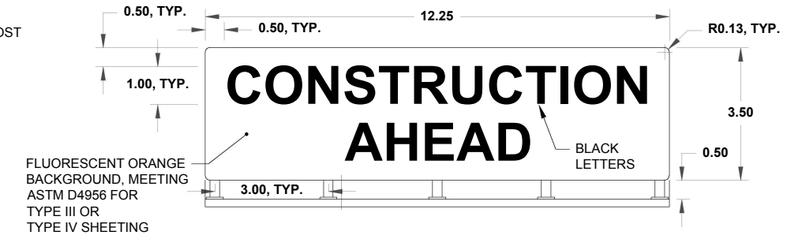

CONSTRUCTION AHEAD SIGN (FROM AC 150/5370-2G)

N.T.S.

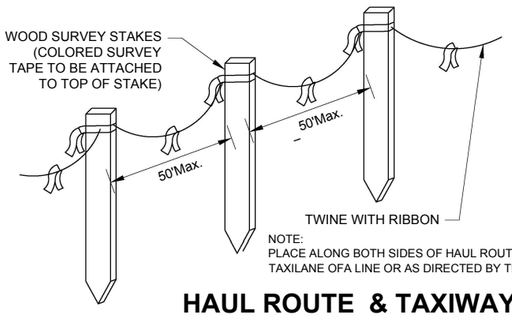

NOTE:
PLACE ALONG BOTH SIDES OF HAUL ROUTES AND ALONG TAXILANE OFA LINE OR AS DIRECTED BY THE RPR.

HAUL ROUTE & TAXIWAY/TAXILANE OBJECT FREE AREA (OFA) DELINEATOR

N.T.S.

NOTES:
1) ALL BARRICADES SHALL BE LINKED END TO END IN ALL LOCATIONS.
2) LOW PROFILE BARRICADES SHALL BE USED WHERE WORK IS ADJACENT TO ACTIVE AIRCRAFT OR INSIDE OF AN ACTIVE TAXIWAY'S SAFETY AREA. CAUTION LIGHTS TO BE RED IN COLOR AND FLASHING DURING HOURS OF DARKNESS.
3) BARRICADES TO BE WATER FILLED OR SECURED WITH SAND BAGS.
4) LOW PROFILE BARRICADE TO BE 10" HIGH, EXCLUDING LIGHTS AND FLAGS.

LOW PROFILE BARRICADE DETAIL

N.T.S.

TRAFFIC CONE

N.T.S.

SPECIFICATIONS

- 6' LENGTH
- 24" WIDTH
- 46" HEIGHT
- EMPTY : 130 LBS
- FULL (WATER FILLED): 1500 LBS

1. Interlocking Coupler
2. Light Box Recess
3. Fill Hole
4. Forklift Access
5. Drain Hole
6. Ground Mounting Ports

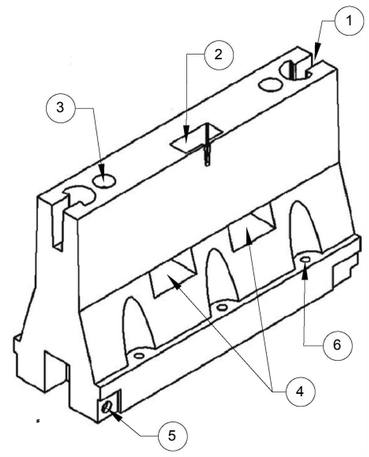

HIGH PROFILE BARRICADE (YODOCK 2001 OR EQUIVALENT)

N.T.S.

FLY VPS
DESTIN - FORT WALTON BEACH AIRPORT

OKALOOSA COUNTY

INFRASTRUCTURE CONSULTING & ENGINEERING
5550 WEST IDLEWILD AVE. SUITE 102
TAMPA, FLORIDA 33634 (813) 330-2701
CERTIFICATE OF AUTHORIZATION NO.: 30862

Project Name:
CONSTRUCT WEST APRON EXPANSION AND INFRASTRUCTURE AT VPS

Designer:	Checked by:
HJ	JNG
Technician:	ICE Proj. No.:
MA	18-46

Engineer of Record:

Notes:

REVISIONS

No.	Description	Date	By

Drawing Name:
CONSTRUCTION SAFETY AND PHASING DETAILS

FAA A.I.P. Project No.:
3-12-0081-029-2018

FDOT Project No.:

Date: MAY 2019

Sheet Number: G3.4

File Path: Y:\Okaloosa County\VPS (Destin-FWB Airport)\18-46 VPS West Apron\CADD-dwg\008-G3.4-CONSTRUCTION SAFETY & PHASING DETAILS.dwg Date: 5/17/2019 7:37 AM

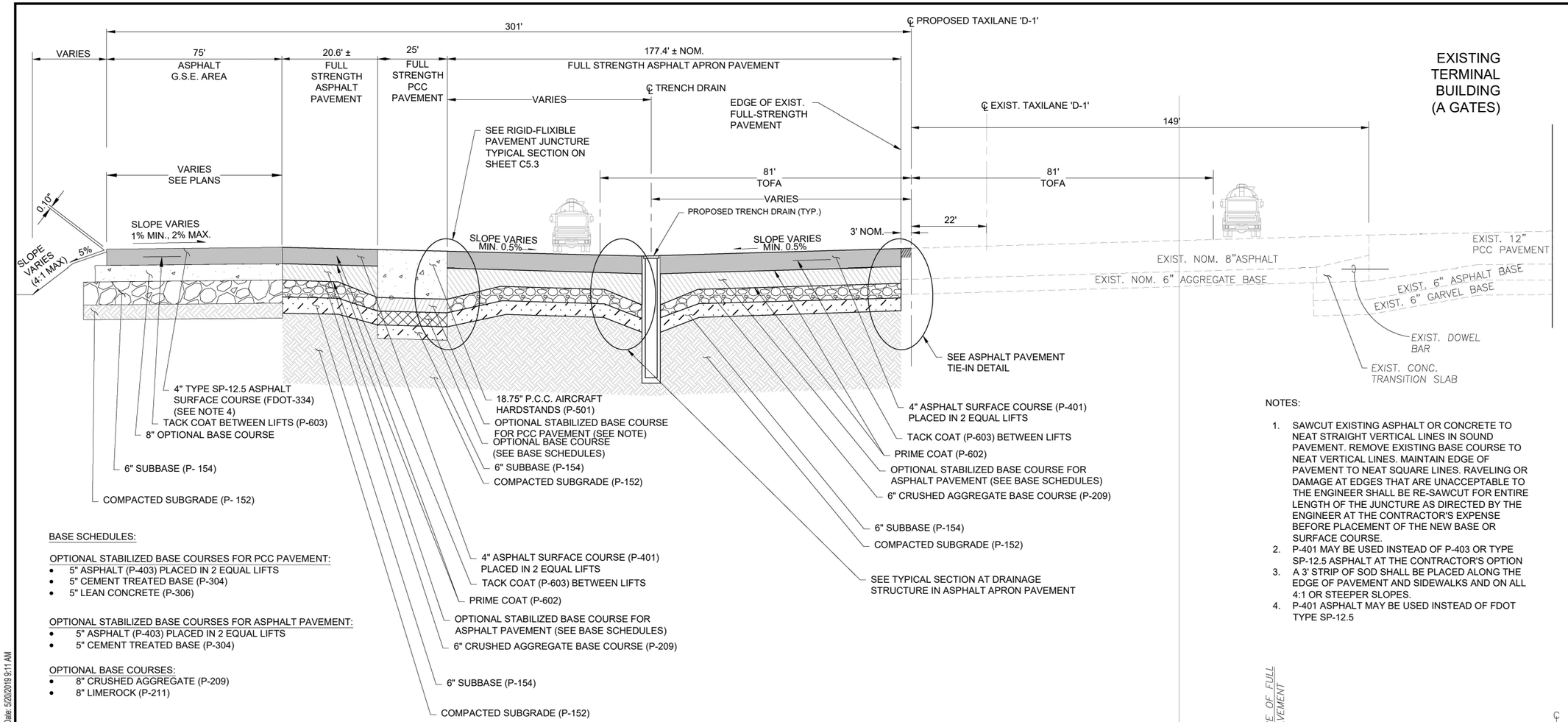

BASE SCHEDULES:

OPTIONAL STABILIZED BASE COURSES FOR PCC PAVEMENT:
- 5" ASPHALT (P-403) PLACED IN 2 EQUAL LIFTS
- 5" CEMENT TREATED BASE (P-304)
- 5" LEAN CONCRETE (P-306)

OPTIONAL STABILIZED BASE COURSES FOR ASPHALT PAVEMENT:
- 5" ASPHALT (P-403) PLACED IN 2 EQUAL LIFTS
- 5" CEMENT TREATED BASE (P-304)

OPTIONAL BASE COURSES:
- 8" CRUSHED AGGREGATE (P-209)
- 8" LIMEROCK (P-211)

APRON EXPANSION TYPICAL SECTION

N.T.S.

NOTES:

1. SAWCUT EXISTING ASPHALT OR CONCRETE TO NEAT STRAIGHT VERTICAL LINES IN SOUND PAVEMENT. REMOVE EXISTING BASE COURSE TO NEAT VERTICAL LINES. MAINTAIN EDGE OF PAVEMENT TO NEAT SQUARE LINES. RAVELING OR DAMAGE AT EDGES THAT ARE UNACCEPTABLE TO THE ENGINEER SHALL BE RE-SAWCUT FOR ENTIRE LENGTH OF THE JUNCTURE AS DIRECTED BY THE ENGINEER AT THE CONTRACTOR'S EXPENSE BEFORE PLACEMENT OF THE NEW BASE OR SURFACE COURSE.
2. P-401 MAY BE USED INSTEAD OF P-403 OR TYPE SP-12.5 ASPHALT AT THE CONTRACTOR'S OPTION
3. A 3' STRIP OF SOD SHALL BE PLACED ALONG THE EDGE OF PAVEMENT AND SIDEWALKS AND ON ALL 4:1 OR STEEPER SLOPES.
4. P-401 ASPHALT MAY BE USED INSTEAD OF FDOT TYPE SP-12.5

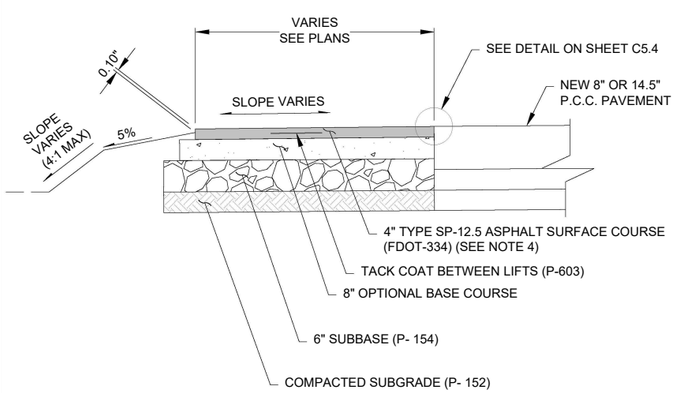

TYPICAL GSE AREA ASPHALT APRON PAVEMENT SECTION

N.T.S.

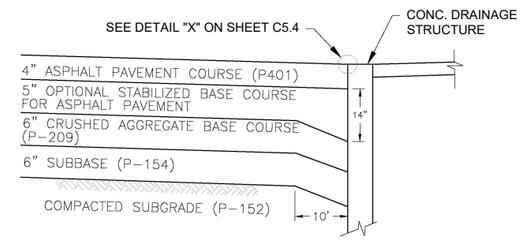

TYPICAL SECTION AT DRAINAGE STRUCTURE IN ASPHALT APRON PAVEMENT

N.T.S.

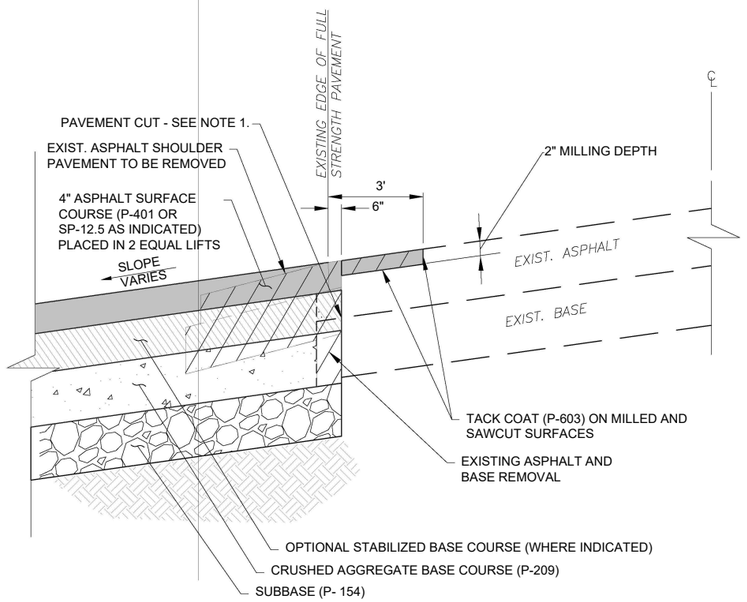

ASPHALT PAVEMENT TIE-IN DETAIL

N.T.S.

DESTIN - FORT WALTON BEACH AIRPORT

OKALOOSA COUNTY

INFRASTRUCTURE CONSULTING & ENGINEERING
5550 WEST IDLEWILD AVE. SUITE 102
TAMPA, FLORIDA 33634 (813) 330-2701
CERTIFICATE OF AUTHORIZATION NO.: 30862

Project Name:
CONSTRUCT WEST APRON EXPANSION AND INFRASTRUCTURE AT VPS

Designer:	Checked by:
HJ	JNG
Technician:	ICE Proj. No.:
MA	18-46

Engineer of Record:

Notes:

REVISIONS

No.	Description	Date	By

Drawing Name:
TYPICAL APRON SECTIONS AND DETAILS

FAA A.I.P. Project No.:
3-12-0081-029-2018

FDOT Project No.:

Date: MAY 2019

Sheet Number: C1.1

File Path: Y:\Okaloosa County\VPS (Destin-FWB Airport)\18-46 VPS West Apron\CADD-dwg\010-C1.1-C1.2-TYP-SECTION AND DETAILS.dwg Date: 5/20/2019 9:11 AM

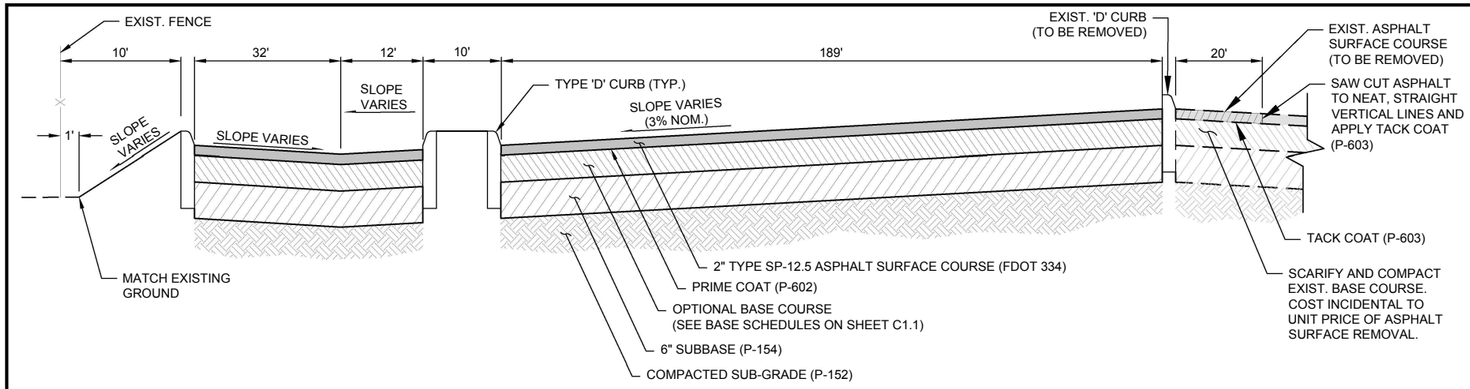

SECTION A-A (SHEET C4.1)
PARKING LOT SECTION

N.T.S.

NOTE: P-401 ASPHALT MAY BE USED INSTEAD OF FDOT TYPE SP-12.5.

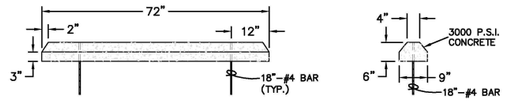

CONCRETE WHEEL STOP

N.T.S

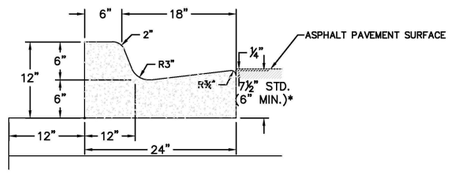

TYPE "F" CURB AND GUTTER

N.T.S.

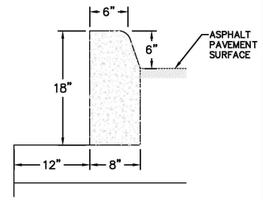

TYPE "D" CURB

N.T.S

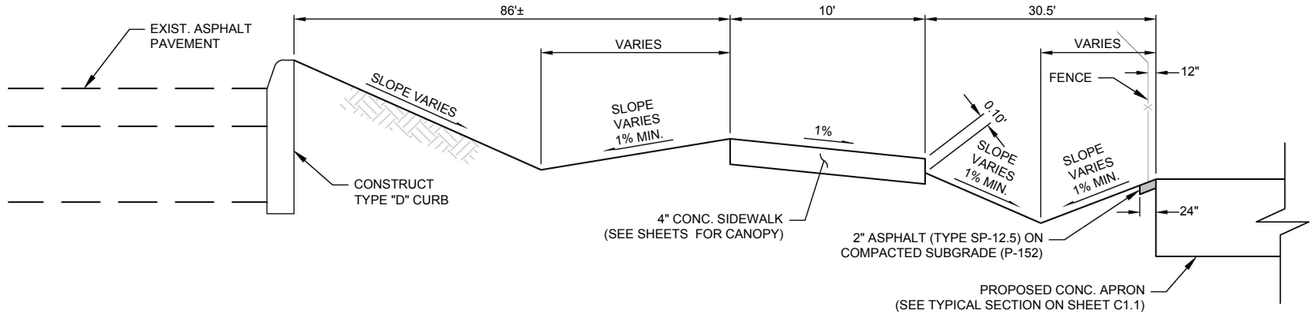

SECTION B-B (SHEET C4.2)

N.T.S.

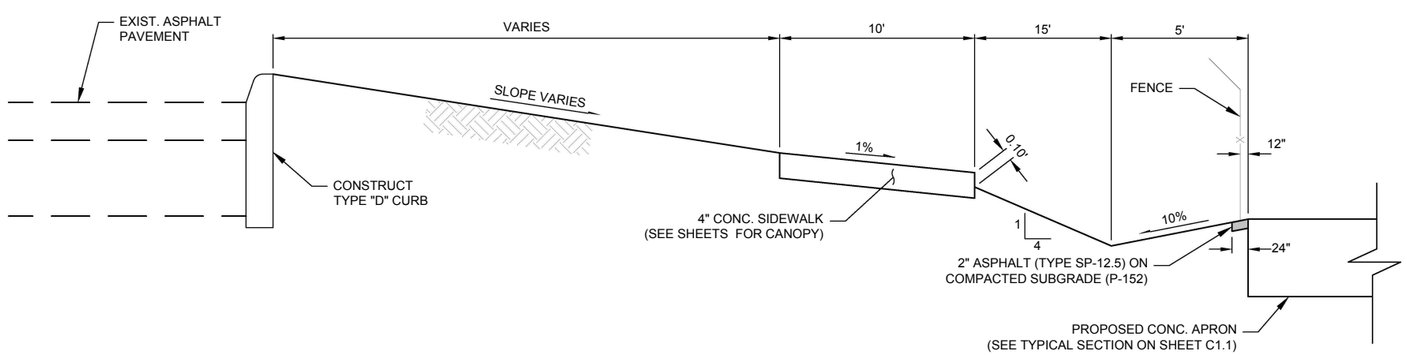

SECTION C-C (SHEET C4.2)

N.T.S.

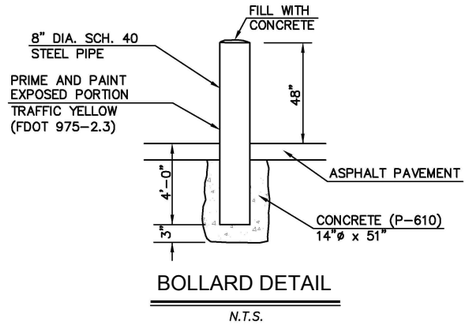

BOLLARD DETAIL

N.T.S.

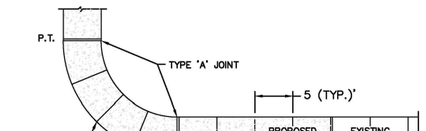

PLAN

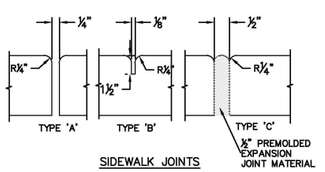

SIDEWALK JOINTS

TABLE OF SIDEWALK JOINTS	
TYPE	LOCATION
'A'	100' MAX. SPACING, P.C./P.T. OF CURVES, JUNCTION OF EXISTING AND NEW SIDEWALKS.
'B'	5'–0" CENTER TO CENTER
'C'	WHERE SIDEWALK ABUTS CONCRETE CURBS, DRIVEWAYS AND SIMILAR STRUCTURES.

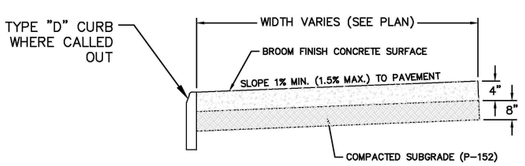

STANDARD CROSS SECTION

CONCRETE SIDEWALK

N.T.S.

DESTIN - FORT WALTON BEACH AIRPORT

OKALOOSA COUNTY

INFRASTRUCTURE CONSULTING & ENGINEERING
5550 WEST IDLEWILD AVE. SUITE 102
TAMPA, FLORIDA 33634 (813) 330-2701
CERTIFICATE OF AUTHORIZATION NO.: 30862

Project Name:
CONSTRUCT WEST APRON EXPANSION AND INFRASTRUCTURE AT VPS

Designer:	Checked by:
HJ	JNG
Technician:	ICE Proj. No.:
MA	18-46

Engineer of Record:

Notes:

REVISIONS

No.	Description	Date	By

Drawing Name:
TYPICAL PARKING LOT SECTIONS AND DETAILS

FAA A.I.P. Project No.:
3-12-0081-029-2018

FDOT Project No.:

Date:	Sheet Number:
MAY 2019	C1.2

File Path: Y:\Okaloosa County\VPS (Destin-FWB Airport)\18-46 VPS West Apron\CADD-dwg\010-C1.1-C1.2-TYP-SECTION AND DETAILS.dwg Date: 5/17/2019 10:02 AM

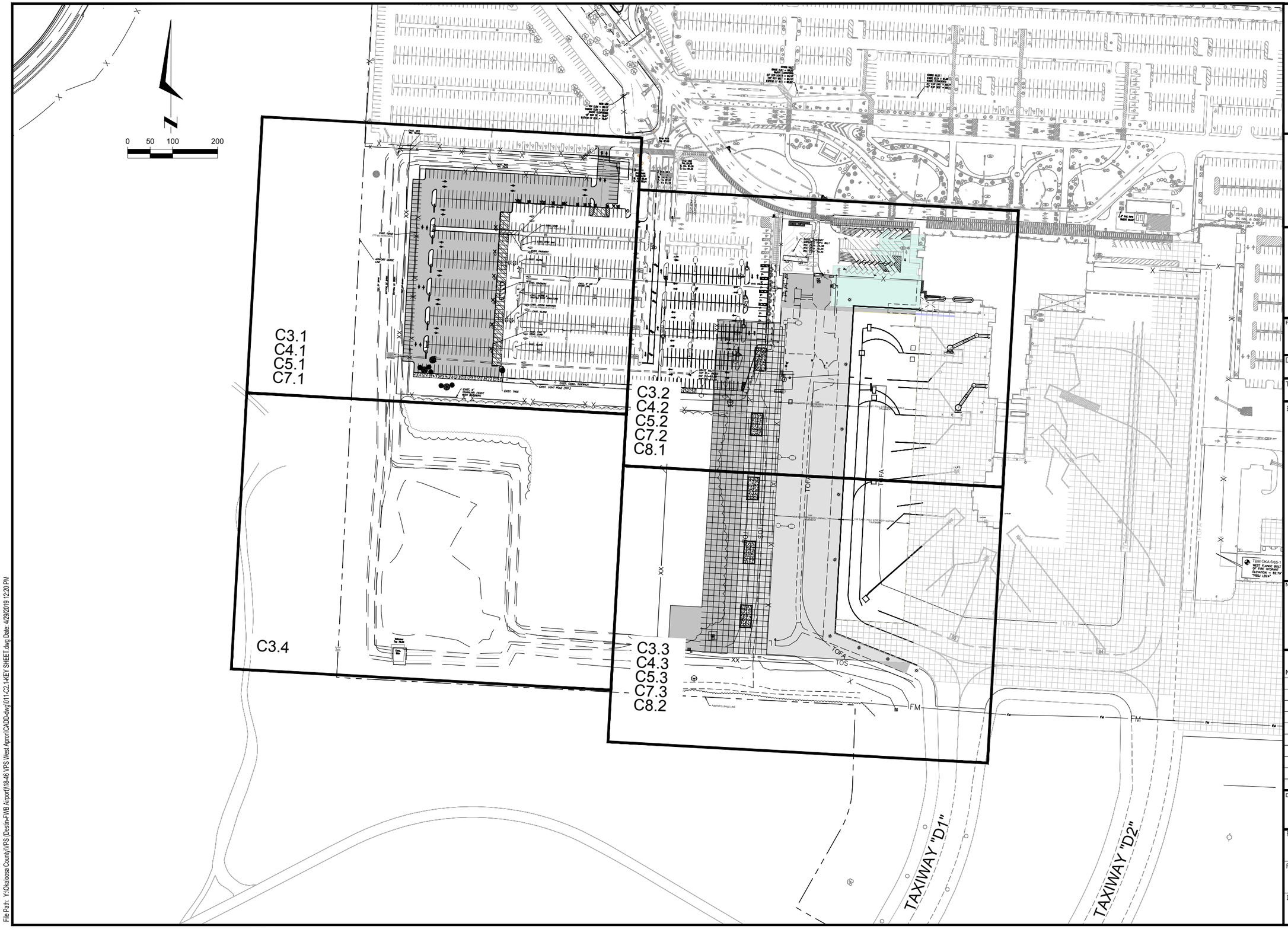

DESTIN - FORT WALTON BEACH AIRPORT

OKALOOSA COUNTY

INFRASTRUCTURE CONSULTING & ENGINEERING
5550 WEST IDLEWILD AVE. SUITE 102
TAMPA, FLORIDA 33634 (813) 330-2701
CERTIFICATE OF AUTHORIZATION NO.: 30862

Project Name:
CONSTRUCT WEST APRON EXPANSION AND INFRASTRUCTURE AT VPS

Designer:	Checked by:
HJ	JNG
Technician:	ICE Proj. No.:
MA	18-46

Engineer of Record:

Notes:

REVISIONS

No.	Description	Date	By

Drawing Name:
KEY SHEET

FAA A.I.P. Project No.:
3-12-0081-029-2018

FDOT Project No.:

Date:	Sheet Number:
MAY 2019	C2.1

File Path: Y:\Okaloosa County\VPS (Destin-FWB Airport\18-46 VPS West Apron\CADD-dwg\011-02.1-KEY SHEET.dwg Date: 4/29/2019 12:20 PM

LEGEND

	FULL STRENGTH ASPHALT PAVEMENT
	GROUND SERVICE EQUIPMENT (GSE) ASPHALT PAVEMENT
	ASPHALT PARKING LOT PAVEMENT
	NEW CONCRETE SIDEWALK
	CONCRETE REMOVAL
	ASPHALT PAVEMENTAND BASE COURSE REMOVAL
	ASPHALT SURFACE COURSE REMOVAL
	CLEARING AND GRUBBING
—TSA—	PROPOSED TAXIWAY OR TAXILANE SAFETY AREA
—TOFA—	PROPOSED TAXIWAY OR TAXILANE OBJECT FREE AREA
VVH101	SUBSURFACE UTILITY TEST HOLE LOCATION
	REMOVAL
—XX—	NEW CHAINLINK FENCE
X	ITEM TO BE REMOVED
—EOP—	EDGE OF PAVEMENT
—SS—	SANITARY LINE
FO	EXISTING FIBER OPTIC BOX
	EXISTING ELECTRIC
	EXISTING TW EDGE LIGHTS
MES	EXISTING MITERED END SECTION
—UE—	EXISTING UNDER GROUND ELECTRIC
—FO—	EXISTING FIBER OPTIC LINE
—FM—	EXIST. FORCE MAIN
—UNK—	UNKNOWN UTILITY LINE
—IR—	EXIST. IRRIGATION LINE
—BFO—	BURIED FIBER OPTIC LINE
—BE—	BURIED ELECTRIC LINE
	TREE LINE
—X—	EXIST. CHAINLINK FENCE
—W—	EXIST. WATER LINE
—G—	EXIST. GAS LINE
—82.0—	EXIST. CONTOURS
	EXIST. SANITARY MANHOLE
	EXIST. FIRE HYDRANT
BFP	EXIST. BACKFLOW PREVENTER
—TOB—	TOP OF BANK
—TOS—	TOP OF SLOPE
	CONTROL POINT
—82.0—	EXIST. CONTOURS
	EXIST. TREES

0 15 30 60

EXIST. MES INV. 76.98
CONNECT TO EXIST. FENCE
CONSTRUCT NEW CHAINLINK FENCE
N:549989.78 E:1322128.16
N:549951.64 E:1322161.84
EXIST. CHAINLINK FENCE (TO BE REMOVED)
NEW 26' CANTILEVER SLIDE GATE
EXIST. MES INV. 79.09
N:549939.34 E:1321730.82
EXIST. MES INV. 80.49 (TO BE REMOVED)
N:549915.92 E:1321702.44
N:549918.33 E:1322099.23
N:549861.80 E:1322156.51
CONTROL POINT 1008 SET 1/2" IRC GFY N:549851.48 E:1321631.51
EXIST. ISLAND
CONTROL POINT 1009 SET 1/2" IRC GFY N:549792.23 E:1321943.94
N:549853.04 E:1322119.89
EXIST. SIGN (TO BE REMOVED)
EXIST. FENCE (TO BE REMOVED)
EXIST. STOP BAR (TO BE REMOVED TYP.)
EXIST. PAVEMENT (TO BE REMOVED)
TYPE 'D' CURB (TYP.)
EXIST. ISLAND
AIRPORT LEASE LINE
EXIST. FIRE HYDRANT
6" GATE VALVE
TYPE 'D' CURB
EXIST. 6" DIP WATER LINE
EXIST. PAVEMENT (TO BE REMOVED)
EXIST. ISLAND & SHUTTLE STOP STRUCTURE
EXIST. ARROW MARKINGS (TO BE REMOVED TYP.)
EXIST. ISLAND
EXIST. TYPE 'D' CONC. CURB (TO BE REMOVED)
EXIST. ISLAND
N:549511.57 E:1321679.38
CONNECT NEW CHAIN LINK FENCE TO EXIST. FENCE
N:549486.13 E:1321703.97
NEW 4" CONC. SIDEWALK
EXIST. CONC. SIDEWALK
EXIST. LIGHT POLE (TYP.)
EXIST. TREE
EXIST. 6' FENCE
MATCH LINE SHEET C3.4
MATCH LINE SHEET C3.2

File Path: Y:\Okaloosa County\VPS (Destin-FWB Airport)\18-46 VPS West Apron\CADD-dwg\0112-C3.1-C3.4-STAKING & DEMOLITION PLANS.dwg Date: 5/17/2019 8:15 AM

DESTIN - FORT WALTON BEACH AIRPORT

OKALOOSA COUNTY

INFRASTRUCTURE CONSULTING & ENGINEERING
5550 WEST IDLEWILD AVE. SUITE 102
TAMPA, FLORIDA 33634 (813) 330-2701
CERTIFICATE OF AUTHORIZATION NO.: 30862

Project Name:
CONSTRUCT WEST APRON EXPANSION AND INFRASTRUCTURE AT VPS

Designer:	Checked by:
HJ	JNG
Technician:	ICE Proj. No.:
MA	18-46

Engineer of Record:

Notes:
1. SEE ELECTRICAL PLANS FOR ADDITIONAL DEMOLITION WORK.
2. SEE SHEET C3.4 FOR SUBSURFACE UTILITY TEST HOLE DATA.
3. NORTHING AND RADII ARE TO THE EDGE OF PAVEMENT.

REVISIONS

No.	Description	Date	By

Drawing Name:
STAKING AND DEMOLITION PLAN NO. 1

FAA A.I.P. Project No.:
3-12-0081-029-2018

FDOT Project No.:

Date:	Sheet Number:
MAY 2019	C3.1

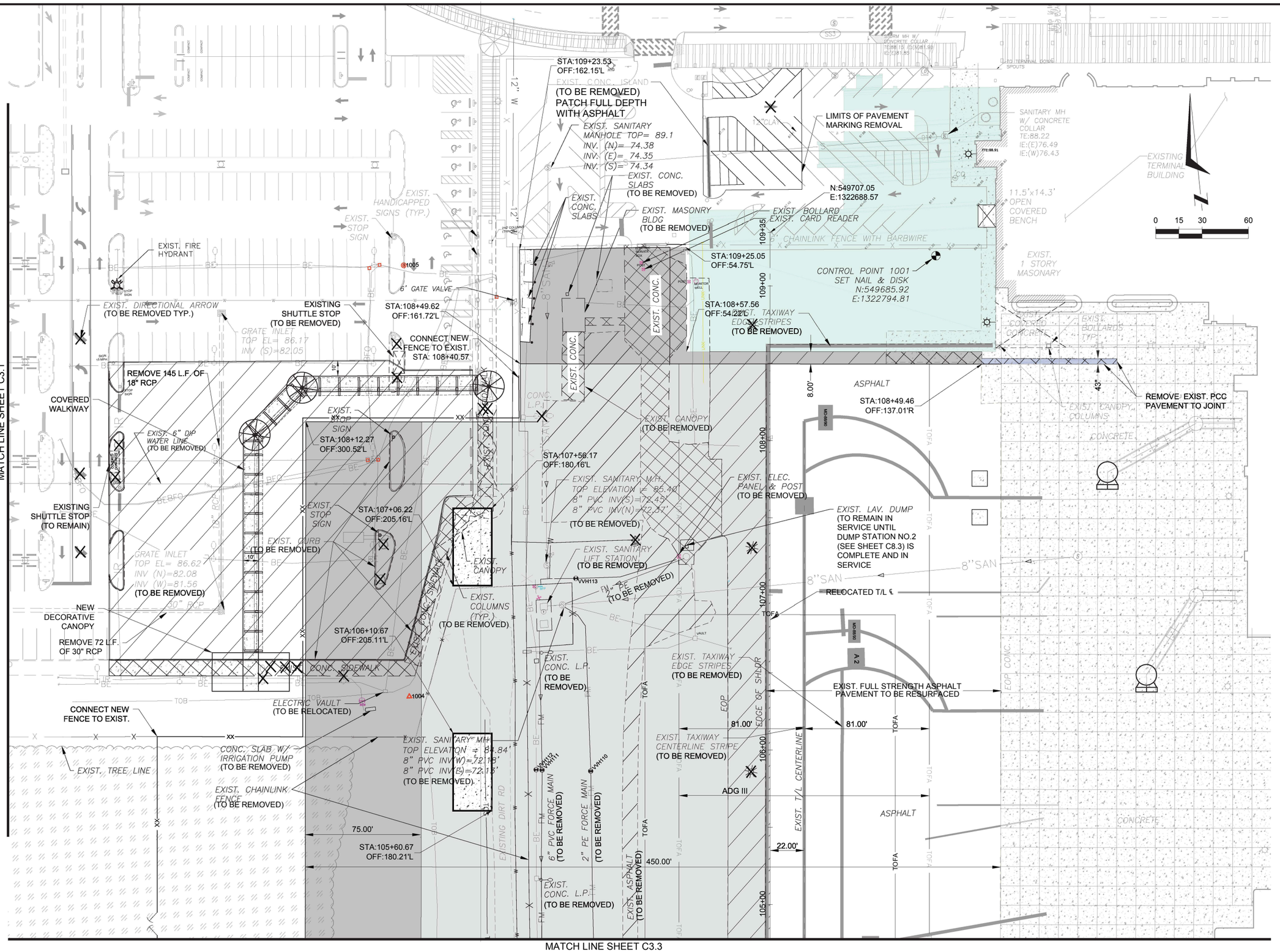

File Path: Y:\Okaloosa County\VPS (Destin-FWB Airport)\18-46 VPS West Apron\CADD-dwg\012-C3.1-C3.4-STAKING & DEMOLITION PLANS.dwg Date: 5/20/2019 11:10 AM

FLY VPS

DESTIN - FORT WALTON BEACH AIRPORT

OKALOOSA COUNTY

INFRASTRUCTURE CONSULTING & ENGINEERING
5550 WEST IDLEWILD AVE. SUITE 102
TAMPA, FLORIDA 33634 (813) 330-2701
CERTIFICATE OF AUTHORIZATION NO.: 30862

Project Name:
CONSTRUCT WEST APRON EXPANSION AND INFRASTRUCTURE AT VPS

Designer:	Checked by:
HJ	JNG
Technician:	ICE Proj. No.:
MA	18-46

Engineer of Record:

Notes:
1. SEE SHEET C3.1 FOR LEGEND.
2. SEE UTILITY RELOCATION AND ELECTRICAL SHEETS FOR ADDITIONAL DEMOLITION INFORMATION.

REVISIONS

No.	Description	Date	By

Drawing Name:
STAKING AND DEMOLITION PLAN NO. 2

FAA A.I.P. Project No.:
3-12-0081-029-2018

FDOT Project No.:

Date:	Sheet Number:
MAY 2019	C3.2

MATCH LINE SHEET C3.2

MATCH LINE SHEET C3.4

DENSE VEGETATION

DENSE VEGETATION

STA:104+68.17
OFF:205.16'L

75.00'

STA:104+18.17
OFF:180.16'L

STA:103+25.67
OFF:205.21'L

301'

STA:102+75.67
OFF:180.16'L

STA:102+18.96
OFF:209.41'L

EXIST. TREE LINE

EXIST. 6" CONC. BOX
TOP EL.=84.8
BOT EL= 82.4
(TO BE REMOVED)

EXIST. 18"
STAND PIPE
(TO BE REMOVED)

EXIST.
ALUMINUM
SHED
(TO BE REMOVED)

EXIST. CONC. L.P.
(TO BE REMOVED)

EXIST. TAXIWAY
EDGE STRIPES
(TO BE REMOVED)

6' CHAINLINK FENCE WITH BARBWIRE
(TO BE REMOVED)

EXIST. TAXIWAY
CENTERLINE STRIPE
(TO BE REMOVED)

2" PE FORCE MAIN

EXIST. ASPHALT

EXISTING DIRT RD

6" PVC

EDGE OF SHLDR

104+00

103+00

102+00

101+00

100+00

ASPHALT

150' EXIST. FULL STRENGTH ASPHALT
PAVEMENT TO BE RESURFACED

149'

RELOCATED T/L ℄

EXIST. T/L ℄

81.00'

81.00'

SAW CUT EDGE OF
EXISTING CONCRETE

CURVE
PI STA. 103+92.19
Δ = 72° 43' 27"
D = N33° 39' 35"W
T = 87.88'
L = 93.887'
R = 75.00'
PC STA. 101+37.98
PT STA. 102+31.86

CONCRETE

GATE B5

EXIST. TOFA

N:548880.70
E:1322824.86

B5

EXIST. TOFA

STA:102+04.18
OFF:198.58'L

REMOVE EXIST.
CHAIN LINK FENCE

EXIST. DITCH

EXIST. 36" CMP
(TO BE REMOVED)

INV (W)=77.79

INV (E)=77.76

STA:102+06.43
OFF:398.16'L

STA:102+02.19
OFF:332.84'L

STA:102+05.64
OFF:427.04'L

STA:101+59.93
OFF:135.05'L

STA:100+74.09
OFF:69.62'L

STA:100+00.04
OFF:45.12'L

STA:100+00.11
OFF:69.84'L

EXIST. 6' CHAINLINK FENCE
WITH BARBWIRE

EXIST. VAULT

EXIST. DIRT RD

EXIST. DIRT RD

12" W

AIRPORT LEASE LINE

DENSE VEGETATION

EXIST. TREE LINE

CONTROL POINT 1002
SET 1/2" IRC GFY
N:548750.61
E:1322778.95

25'

0 15 30 60

File Path: Y:\Okaloosa County\VPS (Destin-FWB Airport)\18-46 VPS West Apron\CADD-dwg\012-C3.1-C3.4-STAKING & DEMOLITION PLANS.dwg Date: 5/20/2019 10:56 AM

FLY VPS

DESTIN - FORT WALTON BEACH AIRPORT

OKALOOSA COUNTY

INFRASTRUCTURE
CONSULTING & ENGINEERING
5550 WEST IDLEWILD AVE. SUITE 102
TAMPA, FLORIDA 33634 (813) 330-2701
CERTIFICATE OF AUTHORIZATION NO.: 30862

Project Name:
CONSTRUCT WEST APRON EXPANSION AND INFRASTRUCTURE AT VPS

Designer:	Checked by:
HJ	JNG
Technician:	ICE Proj. No.:
MA	18-46

Engineer of Record:

Notes:
1. SEE SHEET C3.1 FOR LEGEND.

REVISIONS

No.	Description	Date	By

Drawing Name:
STAKING AND DEMOLITION PLAN NO. 3

FAA A.I.P. Project No.:
3-12-0081-029-2018

FDOT Project No.:

Date:	Sheet Number:
MAY 2019	C3.3

MATCH LINE SHEET C3.1

CONTROL POINT 1007
SET 1/2" IRC GFY
N:549434.31
E:1321614.12

AIRPORT
LEASE
LINE

EXISTING
STORMWATER
POND

Skimmer
Top 76.00

Conc.
Weir

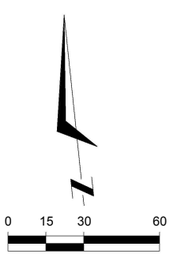

SUBSURFACE UTILITY TEST HOLE DATA								
POINT	DESCRIPTION	NORTHING	EASTING	SURFACE	DEPTH	TOP	OWNER	DIRECTION
VVH101	2" Polyethelene Force Main (Grey)	1322658.69	548798.07	82.98'	2.71'	80.27'	Okaloosa Co.	N-S
VVH102	12" Ductile Iron Water Main	1322635.26	548776.86	82.87'	3.09'	79.78'	Okaloosa Co.	E-W
VVH103	6" Coated Steel Gas Main	1322633.30	548763.58	82.78'	4.89'	77.89'	Okaloosa Gas	E-W
VVH104	12" Ductile Iron Water Main	1322317.13	548830.49	82.08'	4.80'	77.28'	Okaloosa Co.	E-W
VVH105	2" Polyethelene Fiber Optic	1322315.25	548823.23	82.12'	1.89'	80.23'	Century Link	E-W
VVH106	24" Ductile Iron Water Main	1322311.93	548814.81	81.93'	2.83'	79.10'	Okaloosa Co.	E-W
VVH107	6" PVC Force Main (Green)	1322316.46	548810.41	81.83'	4.70'	77.13'	Okaloosa Co.	E-W
VVH108	6" PVC Water Main	1322320.65	548809.91	81.86'	3.76'	78.10'	Okaloosa Co.	E-W
VVH109	6" Coated Steel Gas Main	1322316.47	548778.04	80.92'	4.42'	76.50'	Okaloos Gas	E-W
VVH110	2" Polyethelene Force Main	1322553.11	549365.69	82.45'	2.93'	79.52'	Okaloosa Co.	N-S
VVH111	6" PVC Force Main (Green)	1322521.73	549368.17	81.71'	4.55'	77.16'	Okaloosa Co.	N-S
VVH112	2" (x2) + 0.5" (x2) PVC Electric	1322517.90	549368.58	81.77'	2.00'	79.77'	Gulf Power	N-S
VVH113	2" Polyethelene Water Line	1322550.47	549490.54	85.02'	1.85'	83.17'	Okaloosa Co.	E-W

MATCH LINE SHEET C3.3

File Path: Y:\Okaloosa County\VPS (Destin-FWB Airport)\18-46 VPS West Apron\CADD-dwg\012-C3.1-C3.4-STAKING & DEMOLITION PLANS.dwg Date: 5/17/2019 8:15 AM

DESTIN - FORT WALTON BEACH AIRPORT

INFRASTRUCTURE
CONSULTING & ENGINEERING
5550 WEST IDLEWILD AVE. SUITE 102
TAMPA, FLORIDA 33634 (813) 330-2701
CERTIFICATE OF AUTHORIZATION NO.: 30862

Project Name:
CONSTRUCT WEST APRON EXPANSION AND INFRASTRUCTURE AT VPS

Designer:	Checked by:
HJ	JNG
Technician:	ICE Proj. No.:
MA	18-46

Engineer of Record:

Notes:

REVISIONS

No.	Description	Date	By

Drawing Name:
STAKING AND DEMOLITION PLAN NO. 4

FAA A.I.P. Project No.:
3-12-0081-029-2018

FDOT Project No.:

Date: MAY 2019

Sheet Number: C3.4

LEGEND

	ASPHALT MILLING AND RESURFACING
	FULL STRENGTH ASPHALT PAVEMENT
	GROUND SERVICE EQUIPMENT (GSE) ASPHALT PAVEMENT
	ASPHALT PARKING LOT PAVEMENT
	NEW CONCRETE SIDEWALK
	NEW ASPHALT SURFACE COURSE
	NEW TRENCH DRAIN
	NEW INLET
	NEW MITERED END SECTION
— TSA —	PROPOSED RUNWAY SAFETY AREA
— TOFA —	PROPOSED RUNWAY OBJECT FREE AREA
— ROFZ —	RUNWAY OBJECT FREE ZONE
VVH101	SUBSURFACE UTILITY TEST HOLE LOCATION
— X —	NEW CHAINLINK FENCE
	NEW MANHOLE
—21.00—	PROPOSED CONTOURS
—SF—SF—	TEMPORARY SILT FENCE
IP	INLET PROTECTION
	NEW STORM DRAIN PIPE
	BENCH MARK
	LIMITS OF GRADING AND TURFING
FO	*EXISTING FIBER OPTIC BOX*
	EXISTING ELECTRIC
	EXISTING TW EDGE LIGHTS
MES	*EXISTING MITERED END SECTION*
— UE —	*EXISTING UNDER GROUND ELECTRIC*
— FO —	*EXISTING FIBER OPTIC LINE*
— RSA —	*EXISTING RUNWAY SAFETY AREA*
— ROFA —	*EXISTING RUNWAY OBJECT FREE AREA*
— FM —	*EXIST. FORCE MAIN*
— UNK —	*UNKNOWN UTILITY LINE*
— IR —	*EXIST. IRRIGATION LINE*
— BFO —	*BURIED FIBER OPTIC LINE*
— BE —	*BURIED ELECTRIC LINE*
	TREE LINE
— X —	*EXIST. CHAINLINK FENCE*
— W —	*EXIST. WATER LINE*
— G —	*EXIST. GAS LINE*
—82.00—	*EXIST. CONTOURS*
	EXIST. SANITARY MANHOLE

0 15 30 60

CONNECT TO EXIST. FENCE

CONSTRUCT NEW CHAINLINK FENCE

EXIST. MES (TO BE REMOVED)

S-18 S-19 S-20 S-21

IP

Drop Top W. Inv E. Inv

EXIST. MES INV. 80.49 (TO BE REMOVED)

S13 S13A S12 S12A S11 S10

LIMITS OF GRADING AND TURFING

AIRPORT LEASE LINE

A C1.2

INSTALL TEMPORARY ROCK CHECK STRUCTURE (TYP.)

TOP OF BANK BOTTOM

CONSTRUCT 893 LF OF NEW CHAIN LINK FENCE

10'

INSTALL TEMPORARY SILT FENCE

CONNECT TO EXIST. FENCE WITH NEW CORNER POST

EXIST. 6" FENCE

EXIST. 6" DIP WATER LINE

EXIST. HGHT POLE (TYP.)

EXIST. TREE

MATCH LINE SHEET C4.2

File Path: Y:\Okaloosa County\VPS (Destin-FWB Airport)\18-46 VPS West Apron\CADD-dwg\013-C4.1-4.3-GRADING & DRAINAGE PLANS.dwg Date: 5/20/2019 10:16 AM

DESTIN - FORT WALTON BEACH AIRPORT

OKALOOSA COUNTY

INFRASTRUCTURE CONSULTING & ENGINEERING
5550 WEST IDLEWILD AVE. SUITE 102
TAMPA, FLORIDA 33634 (813) 330-2701
CERTIFICATE OF AUTHORIZATION NO.: 30862

Project Name:
CONSTRUCT WEST APRON EXPANSION AND INFRASTRUCTURE AT VPS

Designer:	Checked by:
HJ	JNG
Technician:	ICE Proj. No.:
MA	18-46

Engineer of Record:

Notes:
1. SEE THIS SHEET FOR LEGEND.
2. SEE SHEET C4.12 FOR DRAINAGE STRUCTURE SCHEDULE.
3. IN ADDITION AREAS WITHIN THE LIMITS OF GRADING AND ALL AREAS TO BE CLEARED AND GRUBBED ARE TO BE TURFED PER FDOT SPEC SECTION 570.

REVISIONS

No.	Description	Date	By

Drawing Name:
GRADING AND DRAINAGE PLAN NO. 1

FAA A.I.P. Project No.:
3-12-0081-029-2018

FDOT Project No.:

Date:	Sheet Number:
MAY 2019	C4.1

MATCH LINE SHEET C4.1

INSTALL HIGH DENSITY POLYETHYLENE SLATS IN EXISTING FENCE FABRIC

CONSTRUCT 4" CONCRETE SIDWALK

INSTALL BOLLARD (TYP. FOR 6) AT EAST CORNER OF EACH EXIST.CONC.SLABS

SEE ARCH. SHEETS FOR CANOPY

EXIST. DIRECTIONAL ARROW (TO BE REMOVED TYP.)

CONSTRUCT TYPE "D" CURB ALONG EDGE OF PAVEMENT

EXIST. SANITARY MANHOLE TOP= 89.1
INV. (N)= 74.38
INV. (E)= 74.35
INV. (S)= 74.34

EXIST. CONC. SLABS

EXIST. HANDICAPPED SIGNS (TYP.)

EXIST. STOP SIGN

INSTALL NEW CANTILEVER SLIDE GATE WITH OPERATOR REPLACE EXIST. FREE EXIT DETECTOR LOOP AND SAFETY LOOP

EXIST. CARD READER KEYPAD (TO REMAIN IN SERVICE)

EXIST. CARD READER (TO REMAIN IN SERVICE)

6' CHAINLINK FENCE WITH BARBWIRE

STORM MH W/ CONCRETE COLLAR TE:88.15 E:(N)81.80 (S)81.85

TO TERMINAL DOWN SPOUTS

SANITARY MH W/ CONCRETE COLLAR TE:88.22 IE:(E)76.45 IE:(W)76.55

EXISTING TERMINAL BUILDING

11.5'x14.3' OPEN COVERED BENCH

EXIST. 1 STORY MASONARY

EXIST. COVERED CONCRETE

EXIST. BOLLARDS TYP.

EXIST. CANOPY COLUMNS

INSTALL TRENCH DRAIN IN FRONT OF EXIST. ROOF DRAIN DOWNSPOUT

(SEE DETAILS ON SHEET C4.11)

RELOCATED T/L ℄

STA:106+62.10
OFF:125.69'L
GRATE EL. = 83.91

STA:106+02.71
OFF:128.76'L
GRATE EL. = 83.47

STA:104+92.07
OFF:75.87'L
GRATE EL. = 82.65

AIRFIELD TRENCH DRAIN (TYP.)

SEE ASPHALT PAVEMENT TIE-IN DETAIL ON SHEET C1.1

NEW CONC. SIDEWALK

CUT AND PATCH EXIST. PAVEMENT AS REQUIRED TO INSTALL INLET AND PIPE. COST TO BE INCIDENTAL TO UNIT COST OF INLET.

LIMITS OF GRADING AND TURFING

70.00'

8"SAN

TOFA

S-14 S-15 S-16 S-17 S7 S7-1 S7-2 S7-3 S8 S9 S9A S9B S6 S6-1

0 15 30 60

MATCH LINE SHEET C4.3

File Path: Y:\Okaloosa County\VPS (Destin-FWB Airport)\18-46 VPS West Apron\CADD-dwg\013-C4.1-4.3-GRADING & DRAINAGE PLANS.dwg Date: 5/16/2019 4:43 PM

FLY VPS

DESTIN - FORT WALTON BEACH AIRPORT

OKALOOSA COUNTY

INFRASTRUCTURE CONSULTING & ENGINEERING
5550 WEST IDLEWILD AVE. SUITE 102
TAMPA, FLORIDA 33634 (813) 330-2701
CERTIFICATE OF AUTHORIZATION NO.: 30862

Project Name:
CONSTRUCT WEST APRON EXPANSION AND INFRASTRUCTURE AT VPS

Designer:	Checked by:
HJ	JNG
Technician:	ICE Proj. No.:
MA	18-46

Engineer of Record:

Notes:
1. SEE SHEET C4.1 FOR LEGEND.
2. SEE SHEET C4.12 FOR DRAINAGE STRUCTURE SCHEDULE.

REVISIONS

No.	Description	Date	By

Drawing Name:
GRADING AND DRAINAGE PLAN NO. 2

FAA A.I.P. Project No.:
3-12-0081-029-2018

FDOT Project No.:

Date:	Sheet Number:
MAY 2019	C4.2

MATCH LINE SHEET C4.2

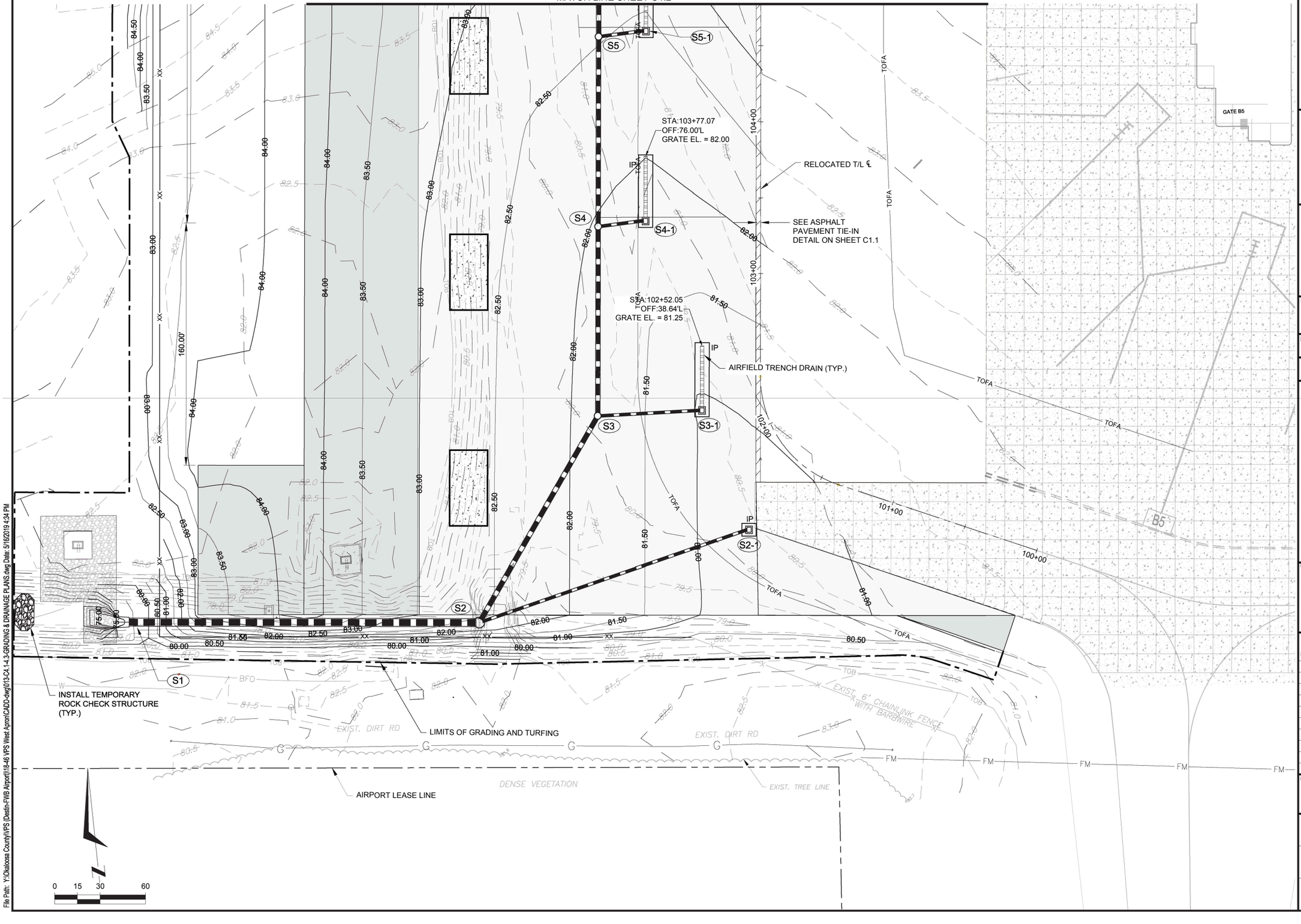

File Path: Y:\Okaloosa County\VPS (Destin-FWB Airport)\18-46 VPS West Apron\CADD-dwg\03-C4.1-4.3-GRADING & DRAINAGE PLANS.dwg Date: 5/16/2019 4:34 PM

FLY VPS

DESTIN - FORT WALTON BEACH AIRPORT

OKALOOSA COUNTY

INFRASTRUCTURE CONSULTING & ENGINEERING
5550 WEST IDLEWILD AVE. SUITE 102
TAMPA, FLORIDA 33634 (813) 330-2701
CERTIFICATE OF AUTHORIZATION NO.: 30862

Project Name:
CONSTRUCT WEST APRON EXPANSION AND INFRASTRUCTURE AT VPS

Designer:	Checked by:
HJ	JNG
Technician:	ICE Proj. No.:
MA	18-46

Engineer of Record:

Notes:
1. SEE SHEET C4.1 FOR LEGEND.
2. SEE SHEET C4.12 FOR DRAINAGE STRUCTURE SCHEDULE.

REVISIONS

No.	Description	Date	By

Drawing Name:
GRADING AND DRAINAGE PLAN NO. 3

FAA A.I.P. Project No.:
3-12-0081-029-2018

FDOT Project No.:

Date:	Sheet Number:
MAY 2019	C4.3

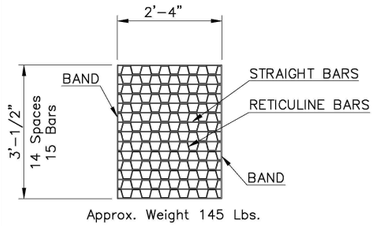

Approx. Weight 145 Lbs.

TYPE 'C' STEEL GRATE

N.T.S.

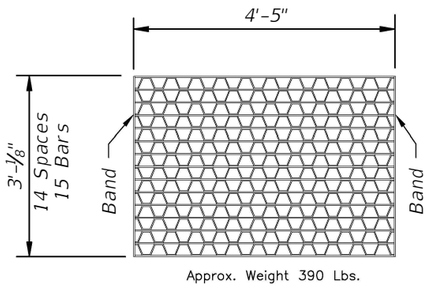

Approx. Weight 390 Lbs.

TYPE 'D' STEEL GRATE

N.T.S.

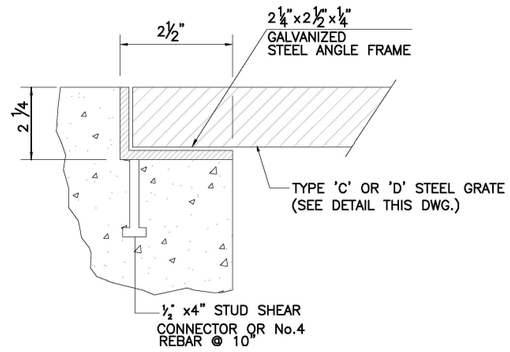

DETAIL 'A'

N.T.S.

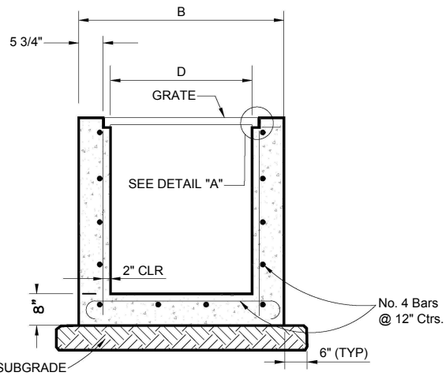

SECTION VIEW

N.T.S.

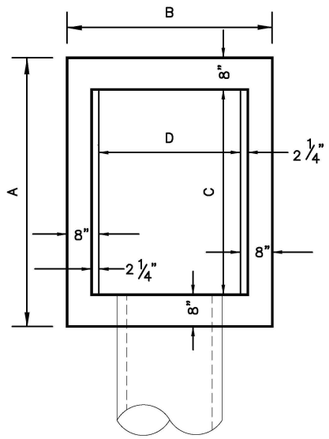

PLAN VIEW

N.T.S.

INLET DIMENSIONS				
	A	B	C	D
TYPE C	4'-5"	3'-4"	3'-1"	2'-0"
TYPE D	4'-5"	5'-5"	3'-1"	4'-1"
INLET TYPE	U.S. FOUNDRY GRATE CAT. NO. (OR EQUAL)			
TYPE C	6611			
TYPE D	6626			

NOTE:
1. GRATES DIFFERING ONLY IN NON-ESSENTIAL DETAILS WILL BE ACCEPTABLE. STEEL GRATES SHALL BE GALVANIZED. GRATES SHALL BE RATED FOR H-20 LOADING.
2. 8" WALL MAY BE REDUCED TO 6" FOR PRE-CAST UNITS.

TYPE 'C' AND 'G' INLET

N.T.S.

SCHEDULE OF BELL REINFORCEMENT Classes II, III, IV, V; Wall A, B, C		
Nominal Pipe Diameter	Design Bell Reinforcement	Maximum Reinforcement Under Tolerance
	SQ. IN. PER FOOT	SQ. IN. PER FOOT
15"	0.07	0.010
18"	0.07	0.010
24"	0.09	0.010
30"	0.12	0.010
36"	0.14	0.010
42"	0.16	0.010
48"	0.19	0.011
54"	0.21	0.012
60"	0.23	0.0135
66"	0.26	0.015
72"	0.28	0.0165
78"	0.30	0.018
84"	0.33	0.0195
90"	0.35	0.021
96"	0.37	0.0225
102"	0.40	0.024
108"	0.42	0.0255

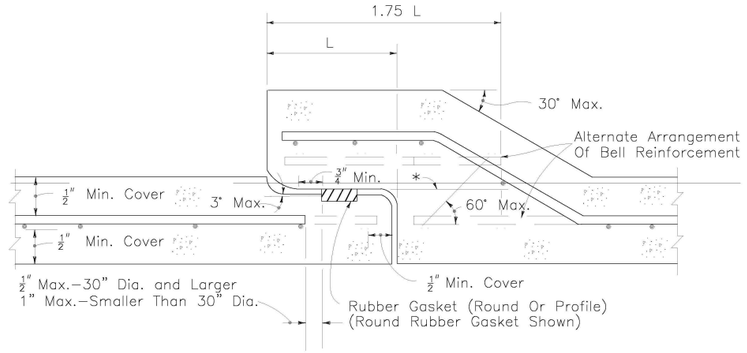

*All circumferential steel located above this line within 1.75 L is defined as bell reinforcement.

ROUND RUBBER GASKET SHOWN

DETAIL OF BELL & SPIGOT CONCRETE PIPE JOINT USING ROUND OR PROFILE RUBBER GASKET

N.T.S.

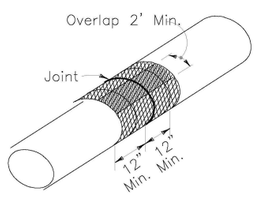

ELLIPTICAL PIPE SHOWN
ISOMETRIC VIEW

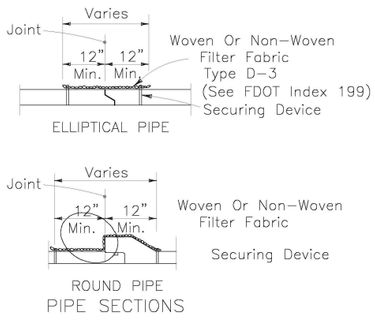

PIPE SECTIONS

Cost of filter fabric jacket to be included in cost of pipe culverts.

FOR ALL PIPE TYPES – CONCRETE PIPE SHOWN

FILTER FABRIC JACKET

N.T.S.

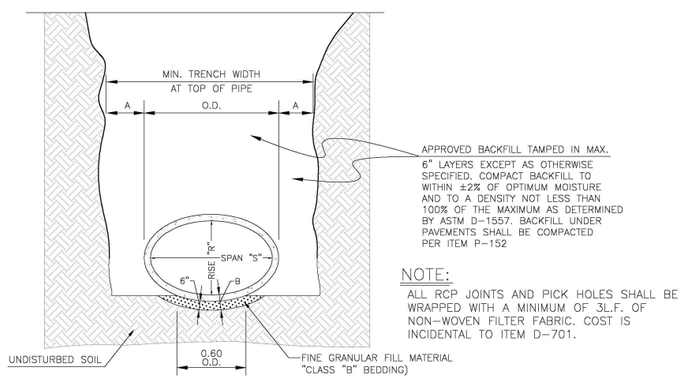

NOTE:
ALL RCP JOINTS AND PICK HOLES SHALL BE WRAPPED WITH A MINIMUM OF 3L.F. OF NON-WOVEN FILTER FABRIC. COST IS INCIDENTAL TO ITEM D-701.

PIPE BEDDING FOR R.C.P., P.V.C. AND D.I.P.

N.T.S.

DESTIN - FORT WALTON BEACH AIRPORT

OKALOOSA COUNTY

INFRASTRUCTURE CONSULTING & ENGINEERING
5550 WEST IDLEWILD AVE. SUITE 102
TAMPA, FLORIDA 33634 (813) 330-2701
CERTIFICATE OF AUTHORIZATION NO.: 30862

Project Name:
CONSTRUCT WEST APRON EXPANSION AND INFRASTRUCTURE AT VPS

Designer:	Checked by:
HJ	JNG
Technician:	ICE Proj. No.:
MA	18-46

Engineer of Record:

Notes:

REVISIONS

No.	Description	Date	By

Drawing Name:
DRAINAGE DETAILS

FAA A.I.P. Project No.:
3-12-0081-029-2018

FDOT Project No.:

Date: MAY 2019

Sheet Number: C4.4

File Path: Y:\Okaloosa County\VPS (Destin-FWB Airport)\18-46 VPS West Apron\CADD-dwg\014-C4.4-C4.12 DRAINAGE DETAILS.dwg Date: 5/17/2019 8:23 AM

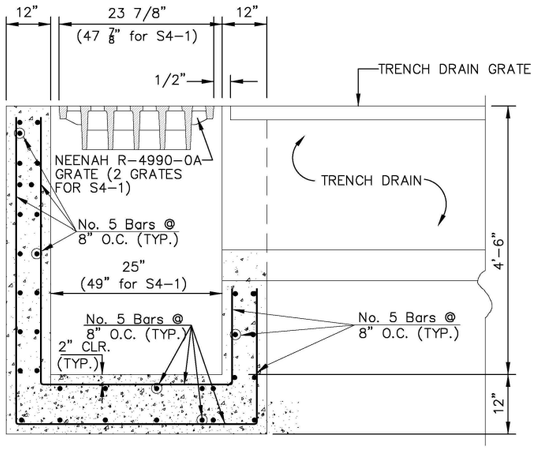

SECTION A-A

N.T.S.

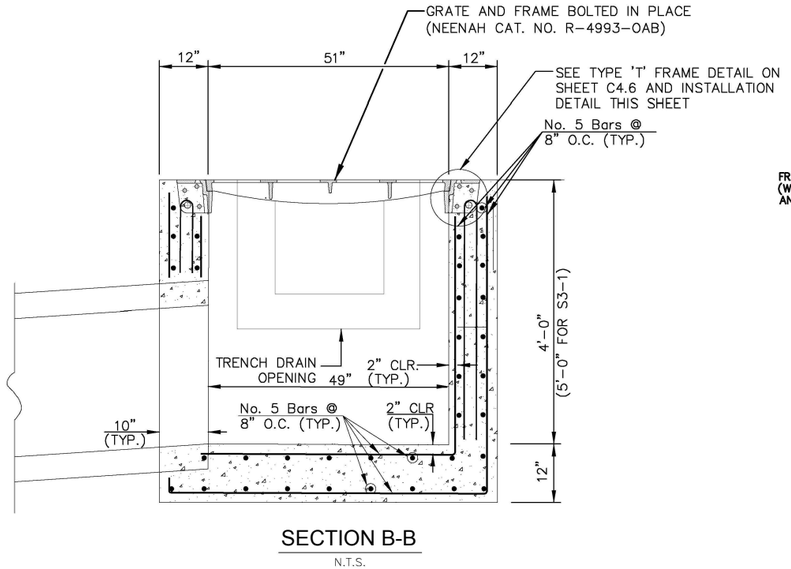

SECTION B-B

N.T.S.

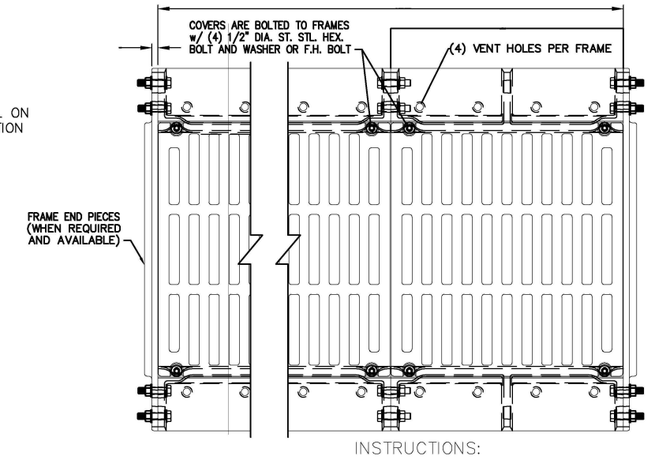

INSTRUCTIONS:

IMPORTANT DO NOT DISASSEMBLE THE COVERS FROM THE FRAMES UNTIL FORMING IS COMPLETE.

1. FIRST POUR THE BOTTOM SLAB OF THE TRENCH.
2. CREATE FORMS FOR THE INSIDE WALLS OF THE TRENCH. THE OUT TO OUT OF THE FORMS MATCHES THE 'C' DIMENSION PROVIDED IN THE CATALOG. WHEN DONE CORRECTLY, THE BOLTED FRAME AND COVER WILL NEATLY REST ON THE FORMS.
3. ADD ADDITIONAL SECTIONS OF TRENCH BY PLACING THEM ON THE FORMS WITH ALL SECTIONS BUTTED TOGETHER. THERE ARE 4 HOLES ON THE ENDS OF THE TRENCH FRAME. THE LARGEST HOLE WILL ACCEPT AS LARGE AS #8 REBAR. THE TWO MATCHING DIAGONAL HOLES WILL ACCEPT 1/2" DIA. STEEL BOLTS. ADD WASHERS AND NUT, FINGER TIGHTEN.
4. THE LONGITUDINAL #8 REBAR MUST BE USED WITH ADDITIONAL REBAR BENDS TO ANCHOR THE FRAME INTO THE CONCRETE. IT IS NOT ACCEPTABLE TO USE ONLY THE #8 REBAR AS THIS WILL BE COUNTER-PRODUCTIVE. THE REMAINING HOLE ON THE FRAME END WILL NOT REQUIRE BOLTS BUT CAN BE USED AS AN ALIGNMENT HOLE FOR THE TWO BUTTED FRAMES WHEN NEEDED.
5. POUR CONCRETE AND VIBRATE ASSURING THAT CONCRETE IS COMPLETELY UNDER THE FRAME AND THERE ARE NO VOIDS.
6. AFTER THE CONCRETE IS SET, THE FORMS CAN BE REMOVED. THE MATED FRAMES AND COVERS NEED TO BE MARKED IN MATCHING SETS SO WHEN THEY ARE REMOVED TO EXPOSE THE FORMWORK, THEY CAN BE REPLACED IN THE EXACT LOCATION AND ORIENTATION THAT THEY WERE ORIGINALLY IN. RELOCATING OR ROTATING THE COVERS IS UNACCEPTABLE.

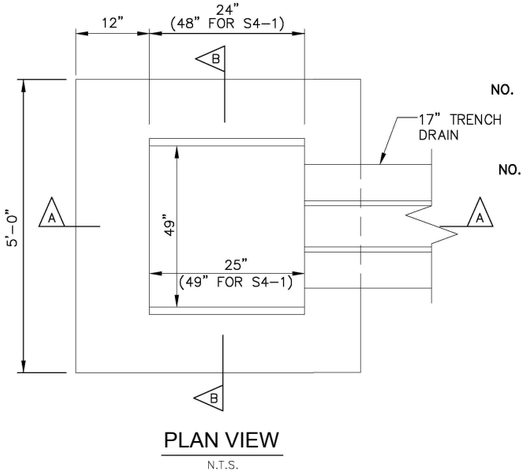

PLAN VIEW

N.T.S.

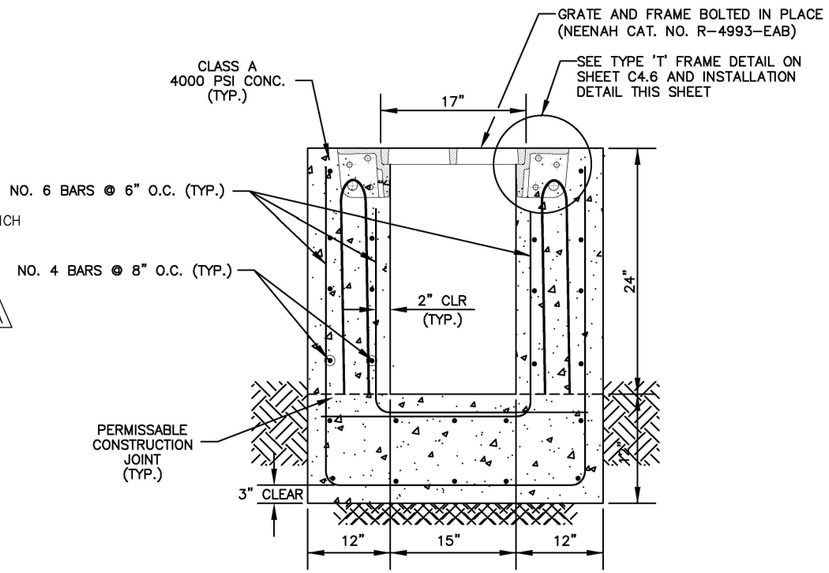

AIRFIELD TRENCH DRAIN INLET DETAIL

N.T.S.

AIRFIELD TRENCH DRAIN SECTION

N.T.S.

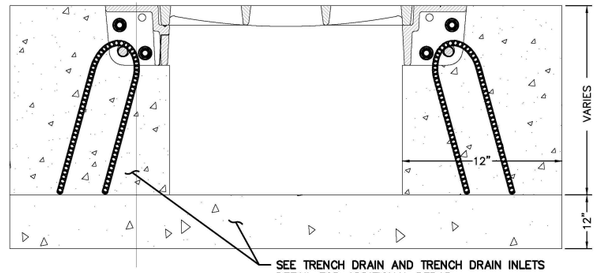

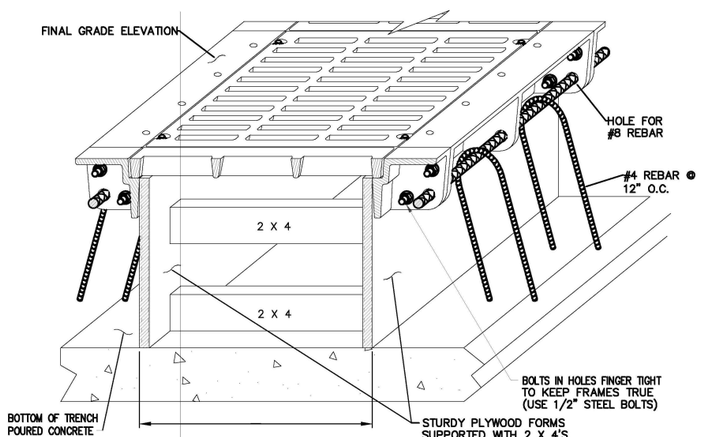

TYPICAL FORMING SECTION

NOTE: TYPE T TRENCH FRAMES COME BOLTED TO THE COVER AND SHOULD REMAIN BOLTED TO THE COVER UNTIL THE FORMWORK IS TO BE REMOVED. REMOVED GRATES MUST BE REINSTALLED IN THE SAME LOCATION AND ORIENTATION.

TYPE T FRAME INSTALLATION DETAIL

N.T.S.

DESTIN - FORT WALTON BEACH AIRPORT

INFRASTRUCTURE CONSULTING & ENGINEERING
5550 WEST IDLEWILD AVE. SUITE 102
TAMPA, FLORIDA 33634 (813) 330-2701
CERTIFICATE OF AUTHORIZATION NO.: 30862

Project Name:
CONSTRUCT WEST APRON EXPANSION AND INFRASTRUCTURE AT VPS

Designer:	Checked by:
HJ	JNG
Technician:	ICE Proj. No.:
MA	18-46

Engineer of Record:

Notes:

REVISIONS

No.	Description	Date	By

Drawing Name:
DRAINAGE DETAILS

FAA A.I.P. Project No.:
3-12-0081-029-2018

FDOT Project No.:

Date:	Sheet Number:
MAY 2019	C4.5

File Path: Y:\Okaloosa County\VPS (Destin-FWB Airport)\18-46 VPS West Apron\CADD-dwg\0914-C4.4-C4.12 DRAINAGE DETAILS.dwg Date: 5/17/2019 8:23 AM

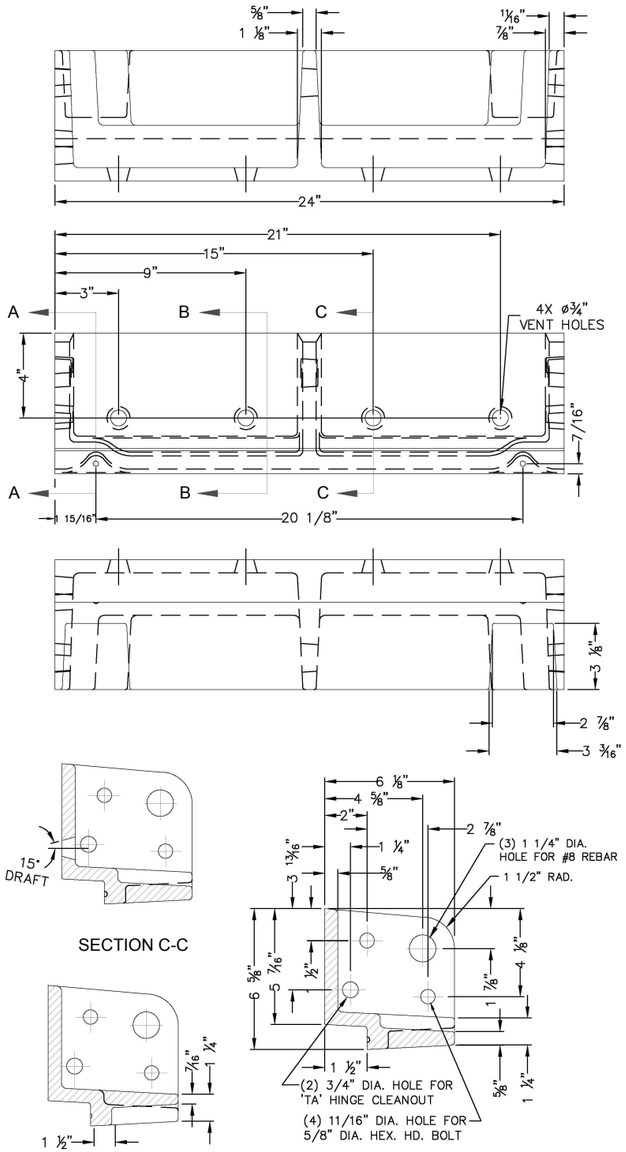

SECTION C-C

SECTION A-A

SECTION B-B

TYPE 'T' FRAME DETAIL

N.T.S.

FRAME TO BE NEENAH R-4993 TYPE T OR EQUAL

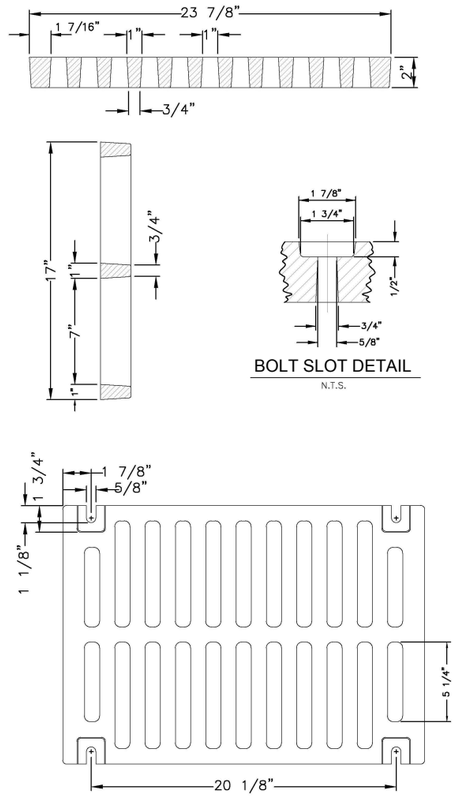

BOLT SLOT DETAIL

N.T.S.

TRENCH DRAIN GRATE DETAIL

N.T.S.

GRATE TO BE NEENAH R-4990-EAB OR EQUAL

NOTE:
GRATES DIFFERING ONLY IN NON-ESSENTIAL DETAILS WILL BE ACCEPTABLE. GRATES TO BE RATED FOR 100,000 LB DUAL WHEEL LOAD WITH A TIRE PRESSURE OF 250 PSI

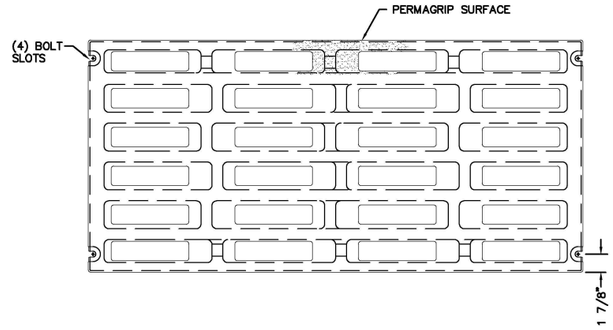

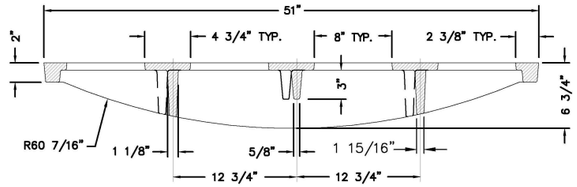

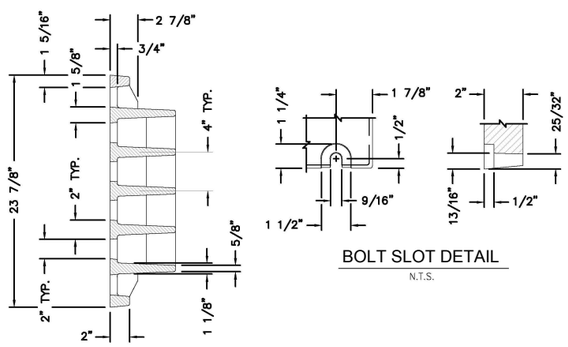

BOLT SLOT DETAIL

N.T.S.

TRENCH DRAIN INLET GRATE DETAIL

N.T.S.

GRATE TO BE NEENAH R-4990-OAB OR EQUAL

File Path: Y:\Okaloosa County\VPS (Destin-FWB Airport)\18-46 VPS West Apron\CADD-dwg\0014-C4.4-C4.12 DRAINAGE DETAILS.dwg Date: 5/17/2019 8:24 AM

DESTIN - FORT WALTON BEACH AIRPORT

INFRASTRUCTURE CONSULTING & ENGINEERING
5550 WEST IDLEWILD AVE. SUITE 102
TAMPA, FLORIDA 33634 (813) 330-2701
CERTIFICATE OF AUTHORIZATION NO.: 30862

Project Name:
CONSTRUCT WEST APRON EXPANSION AND INFRASTRUCTURE AT VPS

Designer:	Checked by:
HJ	JNG
Technician:	ICE Proj. No.:
MA	18-46

Engineer of Record:

Notes:

REVISIONS

No.	Description	Date	By

Drawing Name:
DRAINAGE DETAILS

FAA A.I.P. Project No.:
3-12-0081-029-2018

FDOT Project No.:

Date:	Sheet Number:
MAY 2019	C4.6

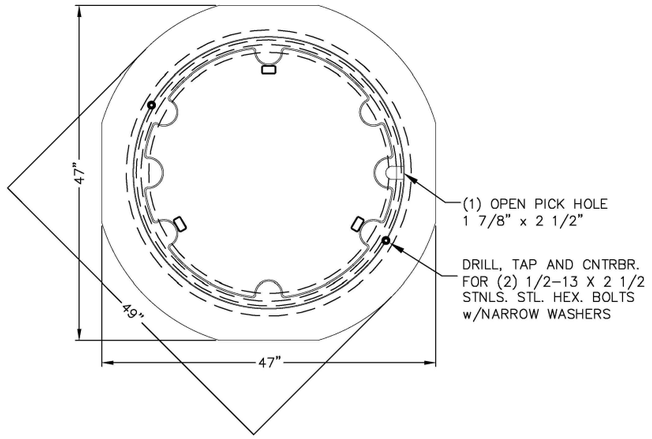

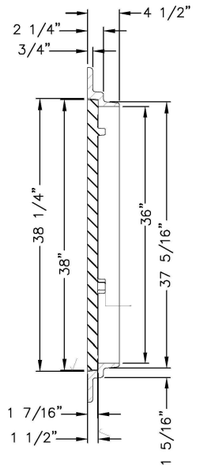

HEAVY DUTY MANHOLE COVER AND FRAME

N.T.S.

COVER TO BE NEENAH R3492–B OR EQUAL. MUST BE RATED TO SUPPORT 100,000 LB WHEEL LOADWITH 250 PSI TIRE PRESSURE.

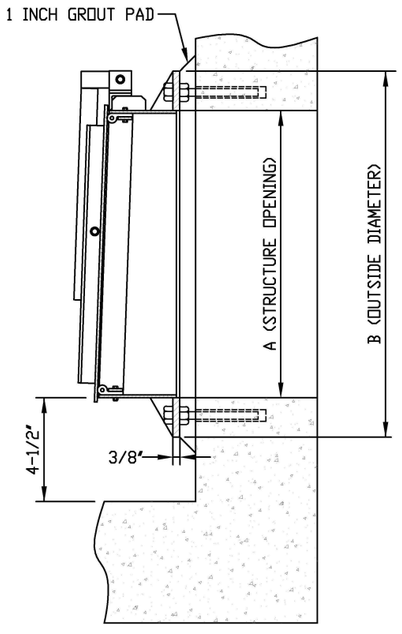

FLAP GATE DIMENSIONS			
PIPE SIZE	GATE SIZE	A	B
12"	15"	17"	$20\frac{1}{2}$"
18"	24"	$26\frac{1}{2}$"	$30\frac{5}{8}$"
30"	36"	$38\frac{1}{2}$"	$42\frac{5}{8}$"
36"	42"	46"	$48\frac{5}{8}$"

FLAP GATE SECTION

N.T.S.

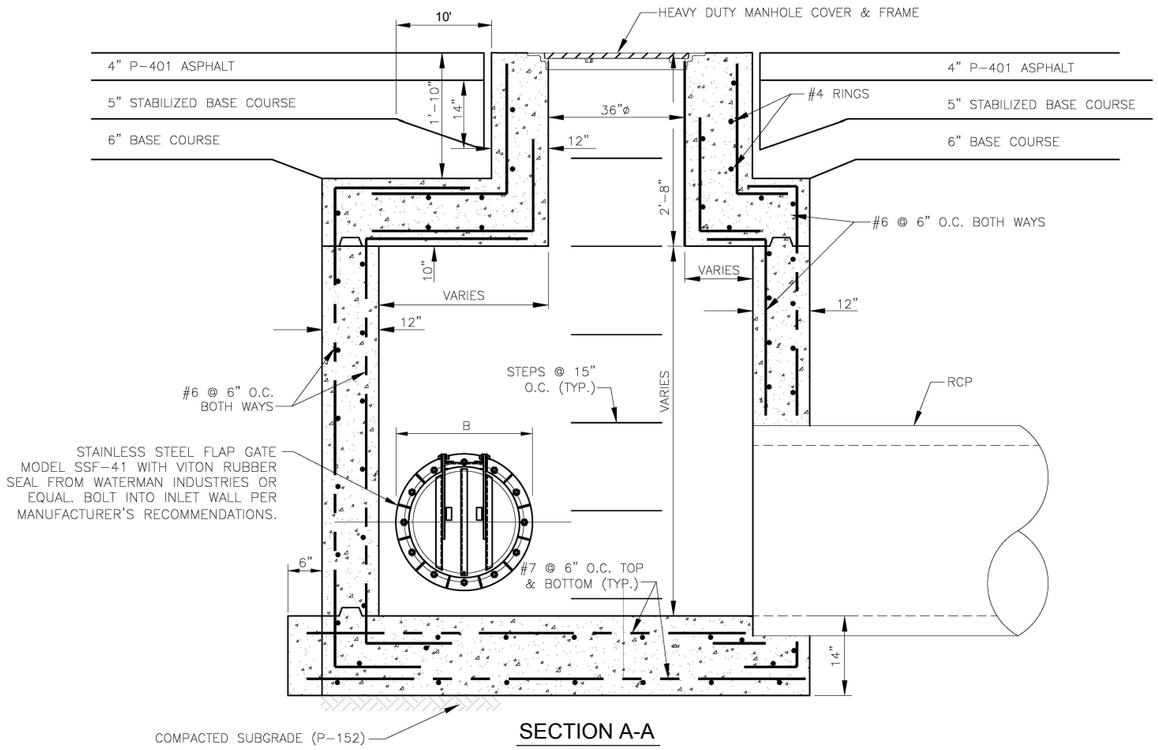

SECTION A-A

N.T.S.

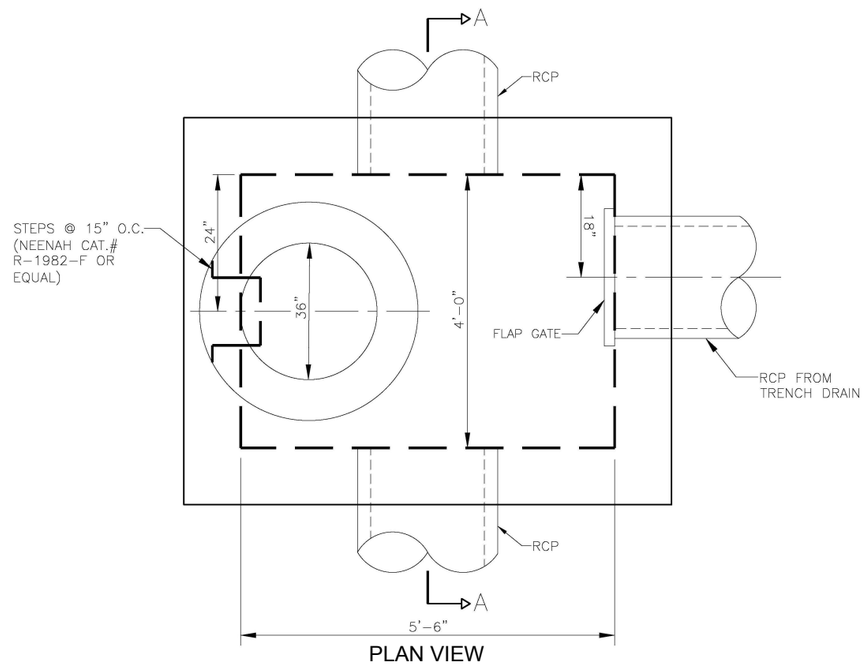

PLAN VIEW

N.T.S.

AIRFIELD MANHOLE DETAILS

N.T.S.

File Path: Y:\Okaloosa County\VPS (Destin-FWB Airport)\18-46 VPS West Apron\CADD-dwg\014-C4.4-C4.12 DRAINAGE DETAILS.dwg Date: 5/17/2019 8:24 AM

FLY VPS

DESTIN - FORT WALTON BEACH AIRPORT

OKALOOSA COUNTY

INFRASTRUCTURE CONSULTING & ENGINEERING
5550 WEST IDLEWILD AVE. SUITE 102
TAMPA, FLORIDA 33634 (813) 330-2701
CERTIFICATE OF AUTHORIZATION NO.: 30862

Project Name:
CONSTRUCT WEST APRON EXPANSION AND INFRASTRUCTURE AT VPS

Designer:	Checked by:
HJ	JNG
Technician:	ICE Proj. No.:
MA	18-46

Engineer of Record:

Notes:

REVISIONS

No.	Description	Date	By

Drawing Name:
DRAINAGE DETAILS

FAA A.I.P. Project No.:
3-12-0081-029-2018

FDOT Project No.:

Date:	Sheet Number:
MAY 2019	C4.7

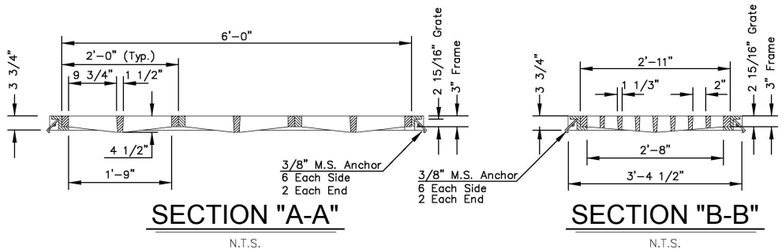

SECTION "A-A"

N.T.S.

SECTION "B-B"

N.T.S.

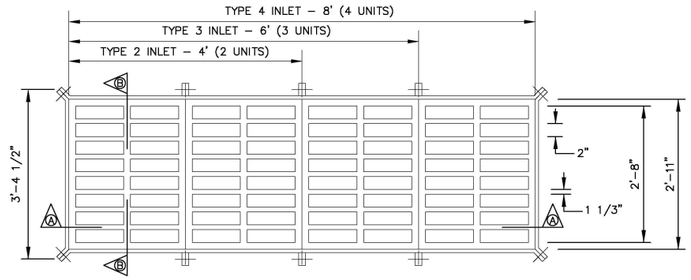

PLAN VIEW

N.T.S.

NOTES:
Similar Grates Differing Only in Non–Essential Details Will Be Acceptable. Grate To Carry 100,000 lbs. Dual Wheel Load With A Tire Pressure Of 250 P.S.I.

Grate And Frame To Be Neenah R–3475–H Or Approved Equivalent.

AIRFIELD/PAVEMENT INLET GRATE DETAIL

N.T.S.

INLET DIMENSIONS				
DESCRIPTION	A	B	C	D
TYPE 2 – INLET	3'–9"	1'–4 1/2"	4'–10"	6 1/2"
TYPE 3 – INLET	5'–9'	1'–4 1/2"	6'–10"	1'–2"
TYPE 4 – INLET	7'–9'	2'–0"	10'–1"	1'–2"

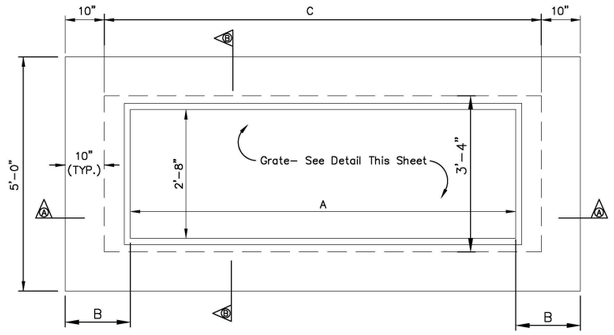

PLAN VIEW

N.T.S.

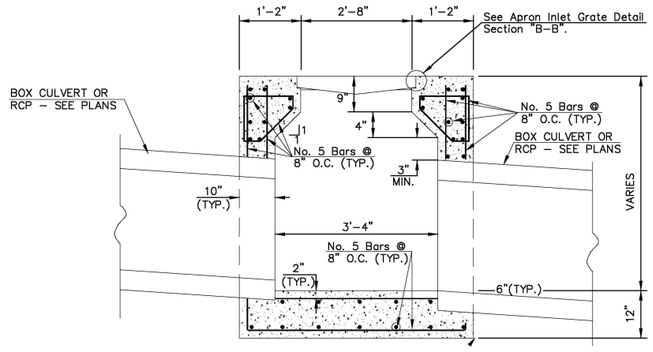

SECTION "B-B"

N.T.S.

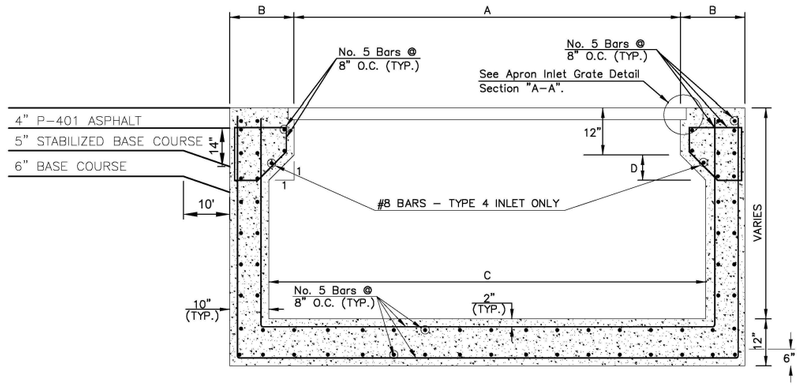

SECTION "A-A"

N.T.S.

AIRFIELD/PAVEMENT INLET DETAIL

N.T.S.

DESTIN - FORT WALTON BEACH AIRPORT

OKALOOSA COUNTY

INFRASTRUCTURE CONSULTING & ENGINEERING
5550 WEST IDLEWILD AVE. SUITE 102
TAMPA, FLORIDA 33634 (813) 330-2701
CERTIFICATE OF AUTHORIZATION NO.: 30862

Project Name:
CONSTRUCT WEST APRON EXPANSION AND INFRASTRUCTURE AT VPS

Designer:	Checked by:
HJ	JNG
Technician:	ICE Proj. No.:
MA	18-46

Engineer of Record:

Notes:

REVISIONS

No.	Description	Date	By

Drawing Name:
DRAINAGE DETAILS

FAA A.I.P. Project No.:
3-12-0081-029-2018

FDOT Project No.:

Date: MAY 2019

Sheet Number: C4.8

File Path: Y:\Okaloosa County\VPS (Destin-FWB Airport)\18-46 VPS West Apron\CADD-dwg\014-C4.4-C4.12 DRAINAGE DETAILS.dwg Date: 5/17/2019 8:24 AM

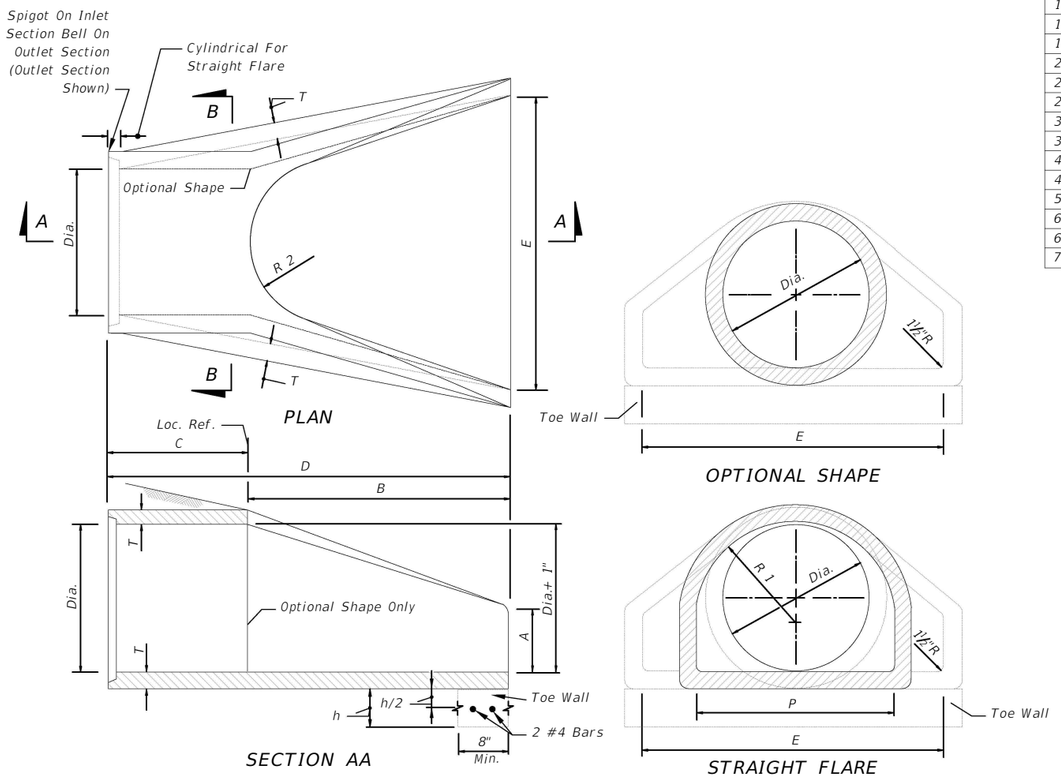

FLARED END SECTION

N.T.S.

DIA.	T	REINF. (in²/ft)	BELL Or Spigot	A	B	C	D	E	P	R 1	R 2	FLAT	WEIGHT (lb)	h	TOE WALL CLASS I CONC (CY)
12"	2"	0.07	1⅛"	4"	2'-0"	4'-0⅞"	6'-0⅞"	2'-0"	19¹⁵⁄₁₆"	10⅛"	9"	3½"	530	12"	.06
15"	2¼"	0.07	2"	6"	2'-3"	3'-10"	6'-1"	2'-6"	24³⁄₁₆"	12½"	11"	3½"	740	12"	.07
18"	2½"	0.07	2½"	9"	2'-3"	3'-10"	6'-1"	3'-0"	29"	15½"	12"	4"	990	15"	.11
21"	2¾"	0.07	2¾"	9"	2'-11"	3'-2"	6'-1"	3'-6"	31⅝"	16⅛"	13"	4"	1280	15"	.12
24"	3"	0.07	2¾"	9½"	3'-7½"	2'-6"	6'-1½"	4'-0"	33⅜"	16¹³⁄₁₆"	14"	4½"	1520	18"	.17
27"	3¼"	0.148	2½"	10½"	4'-0"	2'-1½"	6'-1½"	4'-6"	36"	18⅜"	14½"	4½"	1930	18"	.19
30"	3½"	0.148	3"	1'-0"	4'-6"	1'-7¾"	6'-1¾"	5'-0"	37"	18½"	15"	5"	2190	21"	.24
36"	4"	0.148	3½"	1'-3"	5'-3"	2'-10³⁄₁₆"	8'-1¾"	6'-0"	47¹³⁄₁₆"	24⅛"	20"	5½"	4100	21"	.29
42"	4½"	0.148	3¾"	1'-9"	5'-3"	2'-11"	8'-2"	6'-6"	53⅛"	27½"	22"	5½"	5380	24"	.36
48"	5"	0.148	4¼"	2'-0"	6'-0"	2'-2"	8'-2"	7'-0"	56½"	28⅜"	22"	5¾"	6550	24"	.39
54"	5½"	0.174	4¾"	2'-3"	5'-5"	2'-11"	8'-4"	7'-6"	65½"	33⅜"	24"	6¼"	8040	24"	.42
60"	6"	0.174	5"	2'-6"	5'-0"	3'-3"	8'-3"	8'-0"	72½"	36¹⁄₁₆"	24"	6¾"	8750	24"	.44
66"	6½"	0.174	5½"	2'-0"	6'-6"	1'-9"	8'-3"	8'-6"	72"	36⅛"	24"	7¼"	10630	24"	.47
72"	7"	0.174	6"	2'-0"	6'-6"	1'-9"	8'-3"	9'-0"	77¹³⁄₁₆"	38¹⁵⁄₁₆"	24"	7¾"	12520	24"	.50

GENERAL NOTES

1. FLARED END SECTIONS SHALL CONFORM TO THE REQUIREMENTS OF ASTM C76 WITH THE EXCEPTION THAT DIMENSIONS AND REINFORCEMENT SHALL BE AS PRESCRIBED IN THE TABLE ABOVE. CIRCUMFERENTIAL REINFORCEMENT MAY CONSIST OF EITHER ONE CAGE OR TWO CAGES OF STEEL. FIBER–REINFORCED CONCRETE MAY BE SUBSTITUTED FOR CONVENTIONAL REINFORCEMENT IN ACCORDANCE WITH STRUCTURES DESIGN GUIDELINES, SECTION 3.17. COMPRESSIVE STRENGTH OF CONCRETE SHALL BE 4000 PSI. SHOP DRAWINGS FOR FLARED END SECTIONS HAVING FIBER REINFORCING OR DIMENSIONS OTHER THAN ABOVE MUST BE SUBMITTED FOR APPROVAL TO THE STATE DRAINAGE ENGINEER.

2. CONNECTIONS BETWEEN THE FLARED END SECTION AND THE PIPE CULVERT MAY BE ANY OF THE FOLLOWING TYPES UNLESS OTHERWISE SHOWN ON THE PLANS.

a. JOINTS MEETING THE REQUIREMENTS OF SECTION 449 OF THE STANDARD SPECIFICATIONS (O–RING GASKET). FLARED END SECTION JOINT DIMENSIONS AND TOLERANCES SHALL BE IDENTICAL OR COMPATIBLE TO THOSE USED IN THE PIPE CULVERT JOINT. WHEN PIPE CULVERT AND FLARED END SECTION MANUFACTURERS ARE DIFFERENT, THE COMPATIBILITY OF JOINT DESIGNS SHALL BE CERTIFIED TO BY THE MANUFACTURER OF THE FLARED END SECTIONS.

b. JOINTS SEALED WITH PREFORMED PLASTIC GASKETS. THE GASKETS SHALL MEET THE REQUIREMENTS OF SECTION 942–2 OF THE STANDARD SPECIFICATIONS AND THE MINIMUM SIZES FOR GASKETS SHALL BE AS THAT SPECIFIED FOR EQUIVALENT SIZES OF ELLIPTICAL PIPE.

3. REINFORCED CONCRETE JACKETS, AS DETAILED ON THIS DRAWING. COST OF THE REINFORCED CONCRETE JACKET TO BE INCLUDED IN THE CONTRACT UNIT PRICE FOR THE FLARED END SECTION. WHEN NON–COATED CORRUGATED METAL PIPE IS CALLED FOR IN THE PLANS, THE PIPE SHALL BE BITUMINOUS COATED IN THE JACKETED AREA AS SPECIFIED ON INDEX NO. 280. BITUMINOUS COATING TO BE INCLUDED IN THE CONTRACT UNIT PRICE FOR THE PIPE CULVERT. CONCRETE JACKET SHALL BE AS SPECIFIED ON INDEX NO. 280. COST OF CONCRETE AND REINFORCEMENT SHALL BE INCLUDED IN THE CONTRACT UNIT PRICE FOR THE PIPE CULVERT.

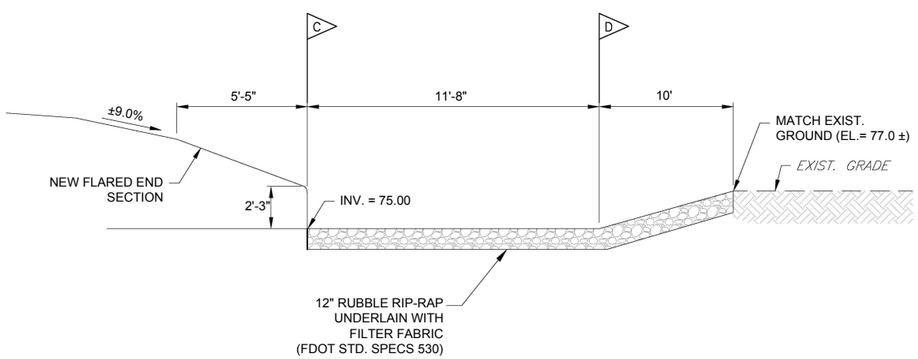

FLARED END PROFILE VIEW

N.T.S.

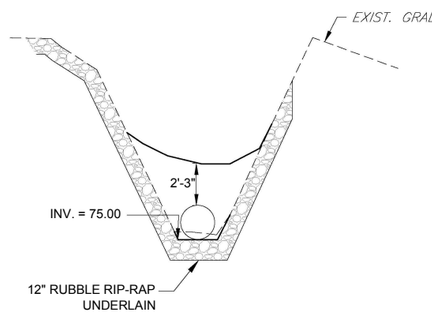

SECTION "C"

N.T.S.

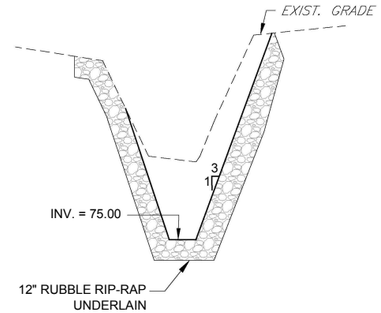

SECTION "D"

N.T.S.

DESTIN - FORT WALTON BEACH AIRPORT

OKALOOSA COUNTY

INFRASTRUCTURE CONSULTING & ENGINEERING
5550 WEST IDLEWILD AVE. SUITE 102
TAMPA, FLORIDA 33634 (813) 330-2701
CERTIFICATE OF AUTHORIZATION NO.: 30862

Project Name:
CONSTRUCT WEST APRON EXPANSION AND INFRASTRUCTURE AT VPS

Designer:	Checked by:
HJ	JNG
Technician:	ICE Proj. No.:
MA	18-46

Engineer of Record:

Notes:

REVISIONS

No.	Description	Date	By

Drawing Name:
DRAINAGE DETAILS

FAA A.I.P. Project No.:
3-12-0081-029-2018

FDOT Project No.:

Date: MAY 2019

Sheet Number: C4.9

File Path: Y:\Okaloosa County\VPS (Destin-FWB Airport)\18-46 VPS West Apron\CADD-dwg\0114-C4.4-C4.12 DRAINAGE DETAILS.dwg Date: 5/17/2019 8:24 AM

DIMENSIONS AND QUANTITIES

	Rise R	Span S	X	A	B	C	E	F	G	M Single Pipe	M Double Pipe	M Triple Pipe	M Quad. Pipe	N	5½" CONCRETE SLAB (CY) Single Pipe	5½" CONCRETE SLAB (CY) Double Pipe	5½" CONCRETE SLAB (CY) Triple Pipe	5½" CONCRETE SLAB (CY) Quad. Pipe	SODDING (SQ. YDS.) Single Pipe	SODDING (SQ. YDS.) Double Pipe	SODDING (SQ. YDS.) Triple Pipe	SODDING (SQ. YDS.) Quad. Pipe
Elliptical	19"	30"	4'–0"	2.62'	5.47'	8.09'	5.36'	8'	2.37'	6.04'	10.04'	14.04'	18.04'	1.27'	0.74	1.15	1.57	1.98	27	32	36	40
Round Pipe	15"	15"	2'–7"	2.27'	4.09'	6.36'	4.03'	8'	1.22'	4.63'	7.21'	9.79'	12.37'	1.19'	0.57	0.87	1.15	1.44	23	26	29	32
	18"	18"	2'–10"	2.36'	5.12'	7.48'	5.03'	9'	1.41'	4.92'	7.75'	10.58'	13.42'	1.21'	0.66	0.99	1.31	1.65	25	28	31	35
	24"	24"	3'–5"	2.53'	7.18△	9.71'	7.03△	11'	1.73'	5.50'	8.92'	12.33'	15.75'	1.25'	0.85	1.30	1.75	2.20	28	32	36	40
	30"	30"	4'–3"	2.70'	9.25'	11.95'	9.03'	13'	2.00'	6.08'	10.33'	14.58'	18.83'	1.29'	1.10	1.74	2.39	3.05	31	36	41	46

B	E	
△ 6.42'	△ 6.25	Dimensions permitted to allow use of 8' standard pipe lengths.
◇ 10.40	◇ 10.10'	Dimensions permitted to allow use of 12' standard pipe lengths.

△◇ Concrete slab shall be deepened to form bridge across crown of pipe. See section below.

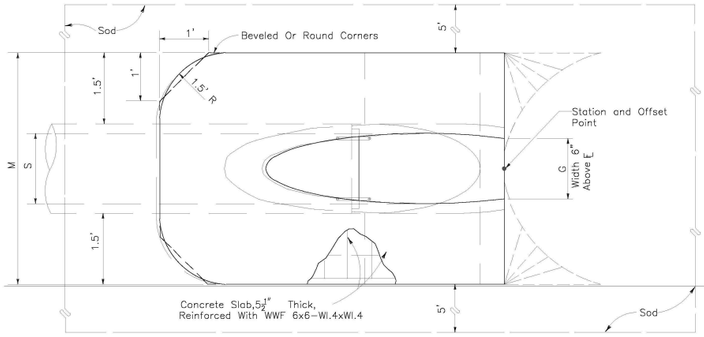

TOP VIEW–SINGLE PIPE

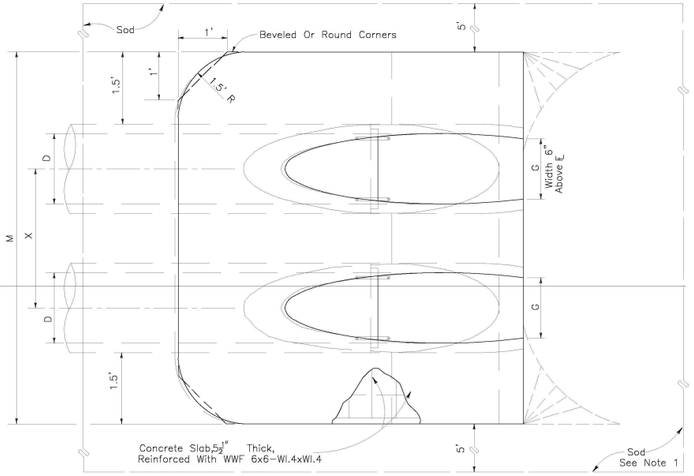

TOP VIEW–MULTIPLE PIPE

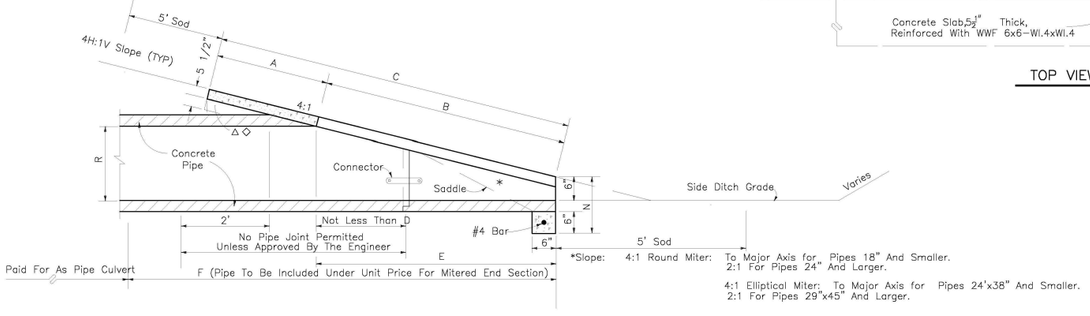

SECTION

MITERED END SECTION

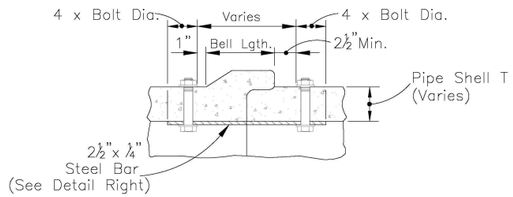

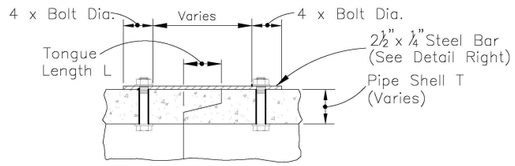

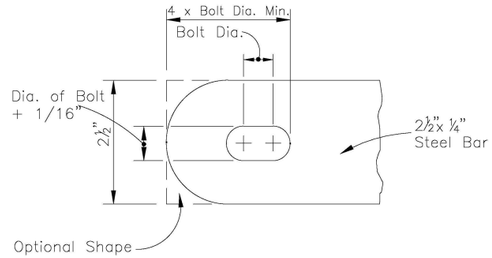

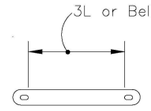

All bars, bolts, nuts and washers are to be galvanized steel.

Bolt diameters shall be 3/8" for 15" to 36" pipe and 5/8" for 42" to 60" pipe.

Two connectors required per joint, located 60° right and left of bottom center of pipe.

Bolt holes in pipe shell are to be drilled.

CONCRETE PIPE CONNECTOR DETAIL FOR MITERED END SECTION

NTS

DESTIN - FORT WALTON BEACH AIRPORT

OKALOOSA COUNTY

INFRASTRUCTURE CONSULTING & ENGINEERING
5550 WEST IDLEWILD AVE. SUITE 102
TAMPA, FLORIDA 33634 (813) 330-2701
CERTIFICATE OF AUTHORIZATION NO.: 30862

Project Name:
CONSTRUCT WEST APRON EXPANSION AND INFRASTRUCTURE AT VPS

Designer:	Checked by:
HJ	JNG
Technician:	ICE Proj. No.:
MA	18-46

Engineer of Record:

Notes:

REVISIONS

No.	Description	Date	By

Drawing Name:
DRAINAGE DETAILS

FAA A.I.P. Project No.:
3-12-0081-029-2018

FDOT Project No.:

Date:	Sheet Number:
MAY 2019	C4.10

File Path: Y:\Okaloosa County\VPS (Destin-FWB Airport)\18-46 VPS West Apron\CADD-dwg\0104-C4.4-C4.12 DRAINAGE DETAILS.dwg Date: 5/17/2019 8:25 AM

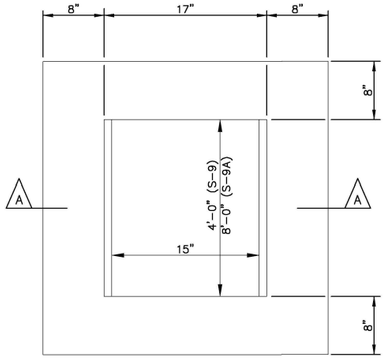

PLAN VIEW

N.T.S.

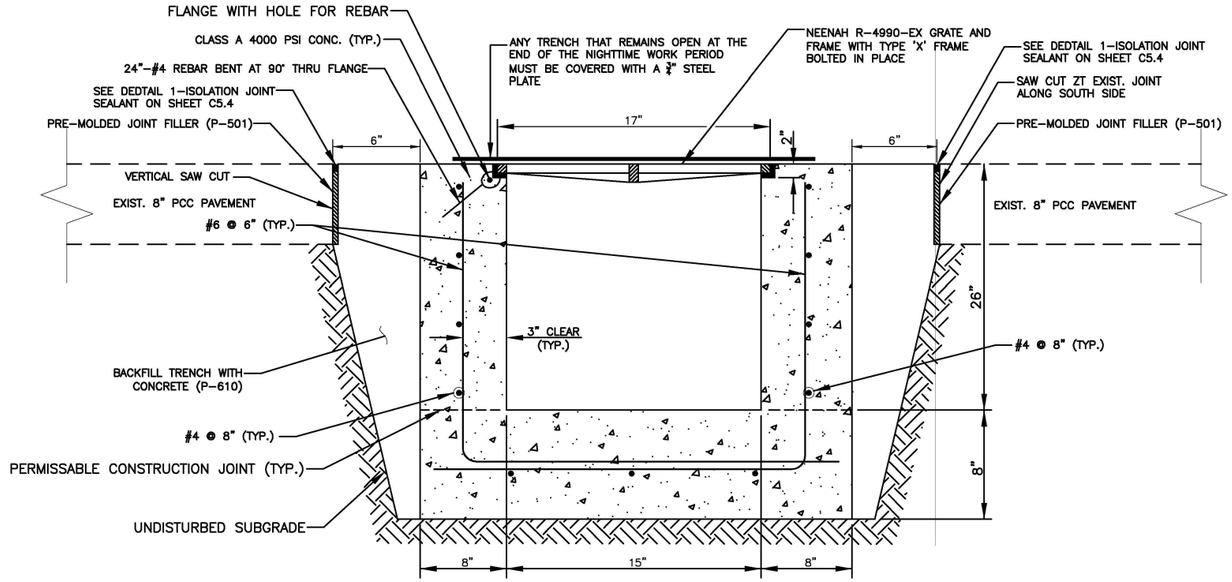

SECTION "A-A"

N.T.S.

TRENCH DRAIN IN EXISTING PCC PAVEMENT SECTION

N.T.S.

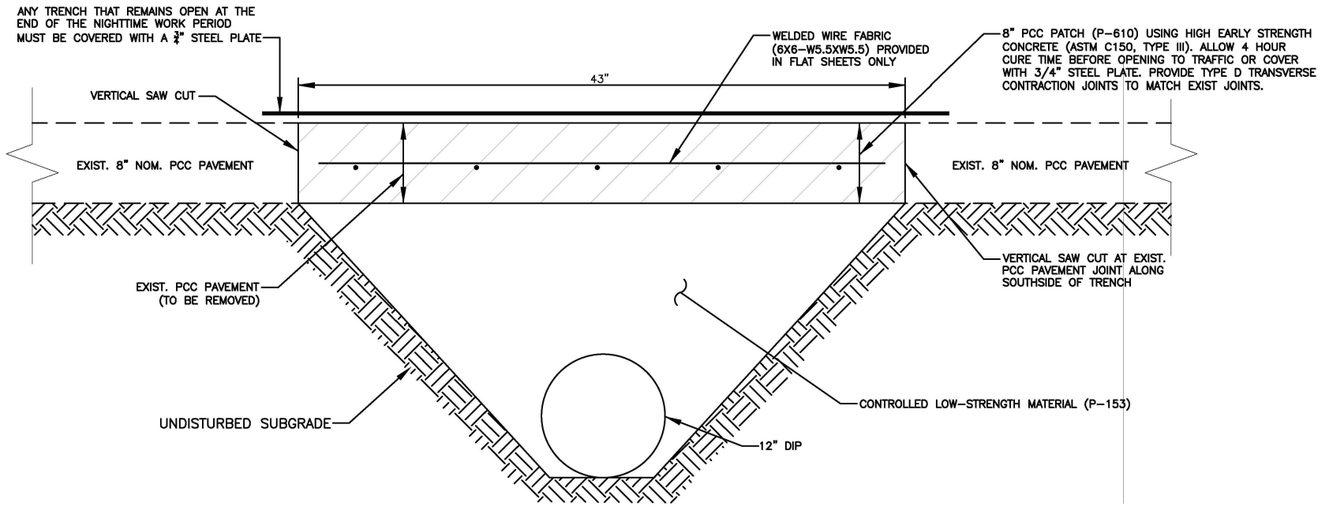

TYPICAL TRENCH FOR 12" DIP IN EXISTING PCC PAVEMENT

N.T.S.

NOTE: COST OF PCC PAVEMENT REMOVAL, TRENCHING, CLSM BACKFILL AND 8" PCC PAVEMENT PATCH TO BE INCIDENTAL TO CONTRACT UNIT PRICE FOR 12" DIP IN EXIST PCC PAVEMENT

File Path: Y:\Okaloosa County\VPS (Destin-FWB Airport)\18-46 VPS West Apron\CADD-dwg\014-C4.4-C4.12 DRAINAGE DETAILS.dwg Date: 5/17/2019 8:25 AM

FLY VPS

DESTIN - FORT WALTON BEACH AIRPORT

OKALOOSA COUNTY

INFRASTRUCTURE CONSULTING & ENGINEERING
5550 WEST IDLEWILD AVE. SUITE 102
TAMPA, FLORIDA 33634 (813) 330-2701
CERTIFICATE OF AUTHORIZATION NO.: 30862

Project Name:
CONSTRUCT WEST APRON EXPANSION AND INFRASTRUCTURE AT VPS

Designer:	Checked by:
HJ	JNG
Technician:	ICE Proj. No.:
MA	18-46

Engineer of Record:

Notes:

REVISIONS

No.	Description	Date	By

Drawing Name:
DRAINAGE DETAILS

FAA A.I.P. Project No.:
3-12-0081-029-2018

FDOT Project No.:

Date:	Sheet Number:
MAY 2019	C4.11

DRAINAGE STRUCTURE SCHEDULE

S1 CONSTRUCT FLARED END SECTION ON 54" RCP
STA. = 101+98.54
OFF. = 438.16'L
INV. = 75.00

S2 CONSTRUCT AIRFIELD MANHOLE
STA. = 101+80.84
OFF. = 231.97'L
GRATE EL. = 82.40
INV. EL. (54") = 75.0
INV. EL. (42"&36") = 75.0

S2-1 CONSTRUCT TYPE "4" AIRFIELD INLET
STA. = 101+56.18
OFF. = 55.49'L
GRATE EL. = 80.50
INV. EL. = 75.0

S3 CONSTRUCT AIRFIELD MANHOLE
STA. = 102+12.01
OFF. = 109.28'L
RIM EL.= 81.82
INV. EL. (42") = 75.00
INV. EL. (36") = 75.50
INV. EL. (30") = 75.50

S3-1 CONSTRUCT AIRFIELD TRENCH DRAIN INLET
STA. = 102+08.14
OFF. = 40.63'L
GRATE EL.= 80.50
INV. EL. = 76.50

S4 CONSTRUCT AIRFIELD MANHOLE
STA. = 103+23.61
OFF. = 107.30'L
RIM EL.= 81.96
INV. EL. (36") = 75.71
INV. EL. (30") = 76.21
INV. EL. (18") = 77.21

S4-1 CONSTRUCT AIRFIELD TRENCH DRAIN INLET
STA. = 103+25.35
OFF. = 76.04'L
GRATE EL.= 81.80
INV. EL. = 77.80

S5 CONSTRUCT AIRFIELD MANHOLE
STA. = 104+46.61
OFF. = 107.16'L
RIM EL.= 82.52
INV. EL. (30") = 76.80
INV. EL. (18") = 77.80

S5-1 CONSTRUCT AIRFIELD TRENCH DRAIN INLET
STA. = 104+50.44
OFF. = 75.70'L
GRATE EL.= 82.40
INV. EL. = 78.40

S6 CONSTRUCT AIRFIELD MANHOLE
STA. = 105+59.11
OFF. = 107.04'L
GRATE EL.= 83.22
INV. EL.(30") = 77.50
INV. EL.(24") = 78.00
INV. EL.(18") = 78.50

S6-1 CONSTRUCT AIRFIELD TRENCH DRAIN INLET
STA. = 105+62.85
OFF. = 75.76'L
GRATE EL.= 83.25
INV. EL. = 79.25

S7 CONSTRUCT AIRFIELD MANHOLE
STA. = 106+52.89
OFF. = 156.94'L
GRATE EL.= 83.92
INV. EL.(24") = 78.75
INV. EL.(18") = 79.80

S7-1 CONSTRUCT TRENCH DRAIN INLET
STA. = 106+52.98
OFF. = 147.99'L
GRATE EL.= 83.92
INV. EL. = 79.92

S7-2 CONSTRUCT TRENCH DRAIN INLET
STA. = 106+52.89
OFF. = 165.44'L
GRATE EL.= 83.92
INV. EL. = 79.92

S7-3 CONSTRUCT TYPE "D" INLET WITH FLAP GATE OVER 12" RCP
STA. = 106+52.89
OFF. = 165.44'L
GRATE EL. = 83.92
INV. EL. (12" RCP) = 81.92
INV. (BOX) = 81.40

S8 CONSTRUCT STANDARD MANHOLE
STA. = 108+53.70
OFF. = 60.00'L
RIM EL. = 86.10
INV. EL. (SW) = 82.10
INV. EL. (E) = 82.10

S9 CONSTRUCT STANDARD MANHOLE
STA. = 108+51.93
OFF. = 51.49'R
RIM EL. = 86.40
INV. EL. = 82.40

S-9A CONSTRUCT 10 L.F. OF TRENCH DRAIN IN EXIST. PCC PAVEMENT
STA. = 108+51.70
OFF = 147.32'R
GRATE EL.= MATCH EXIST. PAVEMENT SURFACE
INV. EL. = 24" BELOW GRATE

S-9B CONSTRUCT 10 L.F. OF TRENCH DRAIN IN EXIST. PCC PAVEMENT
STA. = 108+51.63
OFF. = 212.14'R
GRATE EL.= MATCH EXIST. PAVEMENT SURFACE
INV. EL. = 24" BELOW GRATE

S10 CONSTRUCT 4:1 MITERED END SECTION (M.E.S.) ON 18" RCP
N:549712.96, E:1321663.73
INV. EL. = 78.20

S11 CONSTRUCT TYPE "C" INLET
N:549709.37, E:1321723.72
GRATE EL.= 82.50
INV. EL. = 78.4

S12 CONSTRUCT TYPE "C" INLET
N:549582.07, E:1321716.98
GRATE EL.= 81.70
INV. EL. = 78.4

S12A CONSTRUCT 4:1 MITERED END SECTION (M.E.S.) ON 18" RCP
N:549584.81, E:1321664.31
INV. EL. = 78.00

S13 CONSTRUCT TYPE "C" INLET
N:549843.15, E:1321731.35
GRATE EL.= 82.70
INV. EL. = 78.4

S13A CONSTRUCT 4:1 MITERED END SECTION (M.E.S.) ON 18" RCP
N:549846.27, E:1321676.79
INV. EL. = 78.50

S14 CONSTRUCT TYPE "C" INLET
STA. = 106+90.27
OFF. = 430.09'L
GRATE EL.= MATCH EXIST. PAVEMENT SURFACE
INV. EL. = MATCH EXIST. 30" RCP

S15 CONSTRUCT TYPE "C" INLET
STA. = 108+40.27
OFF. = 355.07'L
RIM EL.= 87.20
INV. EL. = MATCH EXIST. 18" RCP

S16 CONSTRUCT TYPE "C" INLET
STA. = 106+78.76
OFF. = 350.23'L
GRATE EL.= 83.75
INV. EL. = 82.07

S17 CONSTRUCT TYPE "C" INLET
STA. = 106+78.76
OFF. = 315.23'L
GRATE EL.= 83.75
INV. EL. = 82.05

DRAINAGE PIPE SCHEDULE

S-1	S-2	54" TYPE 'S' CPP	244 LF
S-2	S2-1	36" CLASS V RCP	185 LF
S-2	S-3	42" CLASS V RCP	153 LF
S-3	S3-1	30" CLASS V RCP	66 LF
S-3	S-4	36" CLASS V RCP	121 LF
S-4	S4-1	18" CLASS V RCP	28 LF
S-4	S-5	30" CLASS V RCP	125 LF
S-5	S5-1	18" CLASS V RCP	28 LF
S-5	S-6	30" CLASS V RCP	113 LF
S-6	S6-1	18" CLASS V RCP	28 LF
S-6	S-7	24" CLASS V RCP	107 LF
S-7	S7-1	18" CLASS V RCP	5 LF
S-7	S7-2	18" CLASS V RCP	5 LF
S-7	S-8	18" CLASS V RCP	217 LF
S-8	S-9	18" CLASS III RCP	106 LF
S-9	S-9A	12" DIP	90 LF
S-9A	S-9B	12" DIP	57 LF
S7-3	S-16	12" CLASS V RCP	68 LF
S-16	S-17	12" CLASS III RCP	33 LF
S-14	S-15	18" CLASS III RCP	164 LF
S-10	S-11	18" CLASS III RCP	56 LF
S-12A	S-12	18" CLASS III RCP	48 LF
S-13A	S-13	18" CLASS III RCP	51 LF
S-18	S-19	24" CLASS III RCP	195 LF
S-19	S-20	24" CLASS III RCP	255 LF
S-20	S-21	24" CLASS III RCP	40 LF

S18 CONSTRUCT 4:1 MITERED END SECTION (M.E.S.) ON 24" RCP
N:549953.20, E:1321677.43
INV. EL. = 78.00

S19 CONSTRUCT STANDARD MANHOLE
N:549964.70, E:1321872.63
RIM EL. = 83.30
INV. EL. = 79.00

S20 CONSTRUCT TYPE "C" INLET
N:549949.39, E:1322125.82
GRATE EL.= 83.60
INV. EL. = 80.00

S21 CONSTRUCT TYPE "C" INLET
N:549947.02, E:1322167.04
GRATE EL.= 84.00
INV. EL. = 80.30

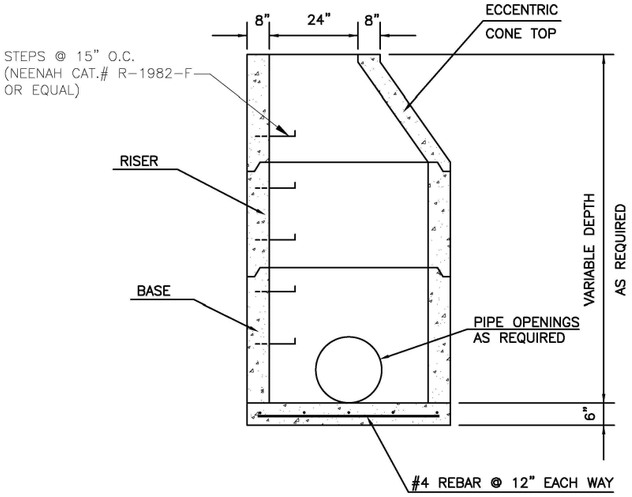

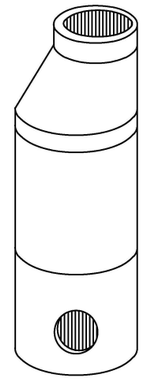

ISOMETRIC VIEW

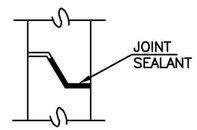

JOINT DETAIL

NOTES:

1) STRUCTURE MAY BE CAST INPLACE OR PRECAST.
2) IF STRUCTURE DEPTH EXCEEDS 4'-6" METAL STEPS ARE TO BE PLACED ON WALL.
3) WALLS SHALL BE REINFORCED WITH WIRE MESH AT 0.2 IN. SQ./FT.
4) BOTTOM SLAB AND CAP SHALL BE REINFORCED WITH #4 REBAR AT 12" O.C. EACH WAY.
5) PROVIDE MANHOLE FRAME AND LID RATED FOR H-20 LOADING.

STANDARD MANHOLE DETA ILS

N.T.S.

FLY VPS

DESTIN - FORT WALTON BEACH AIRPORT

OKALOOSA COUNTY

INFRASTRUCTURE CONSULTING & ENGINEERING
5550 WEST IDLEWILD AVE. SUITE 102
TAMPA, FLORIDA 33634 (813) 330-2701
CERTIFICATE OF AUTHORIZATION NO.: 30862

Project Name:
CONSTRUCT WEST APRON EXPANSION AND INFRASTRUCTURE AT VPS

Designer:	Checked by:
HJ	JNG
Technician:	ICE Proj. No.:
MA	18-46

Engineer of Record:

Notes:

REVISIONS

No.	Description	Date	By

Drawing Name:
DRAINAGE DETAILS

FAA A.I.P. Project No.:
3-12-0081-029-2018

FDOT Project No.:

Date: MAY 2019

Sheet Number: C4.12

File Path: Y:\Okaloosa County\VPS (Destin-FWB Airport)\18-46 VPS West Apron\CADD-dwg\014-C4.4-C4.12 DRAINAGE DETAILS.dwg Date: 5/17/2019 8:25 AM

STORMWATER POLLUTION PREVENTION PLAN

1. SILT FENCING,INLET PROTECTION AND ROCK CHECK STRUCTURES WILL BE REQUIRED TO CONTROL EROSION AS SHOWN ON THE PLANS OR AT LOCATIONS DETERMINED BY THE ENGINEER. THE CONTRACTOR SHALL IMPLEMENT AND MAINTAIN THESE MEASURES THROUGHOUT CONSTRUCTION. ALL EROSION CONTROL DEVICES SHALL BE INSTALLED PRIOR TO ANY EXCAVATION OR CLEARING AND GRUBBING WORK. THE QUANTITY OF TEMPORARY EROSION AND SEDIMENTATION CONTROL DEVICE MAY BE INCREASED OR DECREASED FROM THAT SHOWN IN THE DRAWINGS BASED ON WEATHER, CONSTRUCTION PROCEDURES AND ACTUAL SITE CONDITIONS THAT OCCUR DURING CONSTRUCTION. SUCH VARIATIONS WILL NOT BE CONSIDERED AS ALTERATIONS IN THE DETAILS OF CONSTRUCTION OR A CHANGE IN THE CHARACTER OF WORK.
2. SILT FENCE SHALL BE CONSTRUCTED IN ACCORDANCE WITH SECTION 104 OF THE FDOT STANDARD SPECIFICATIONS FOR ROAD AND BRIDGE CONSTRUCTION. FILTER FABRIC FOR SILT FENCE AND ROCK CHECK STRUCTURES SHALL BE IN ACCORDANCE WITH SECTION 985 OF THE FDOT STANDARD SPECIFICATIONS.
3. ALL DISTURBED AREAS ARE TO BE SODDED IN ACCORDANCE WITH FDOT SPECIFICATIONS SECTION 570 WITHIN 14 DAYS OF THE COMPLETION OF GRADING OPERATIONS AND WITHIN THE PRESCRIBED PHASING SCHEDULE.
4. ANY FINES, PENALTIES, OR OTHER COSTS ASSESSED BY STATE, LOCAL OR OTHER GOVERNMENTAL AGENCIES FOR NON-PERFORMANCE OF THE EROSION CONTROL REQUIREMENTS OF THIS PROJECT AGAINST THE AIRPORT AUTHORITY SHALL BECOME THE RESPONSIBILITY OF THE CONTRACTOR, AND ANY SUCH ASSESSMENTS, IF NOT PAID BY THE CONTRACTOR, WILL BE DEDUCTED FROM MONIES DUE AT THE COMPLETION OF THE PROJECT.
5. THE CONTRACTOR SHALL BE RESPONSIBLE FOR FILING AN NPDES NOTICE OF INTENT (NOI) TO USE GENERIC PERMIT FOR STORMWATER DISCHARGE FROM LARGE AND SMALL CONSTRUCTION ACTIVITIES FROM FDEP. THE CONTRACTOR WILL ALSO BE REQUIRED TO FILE A NOTICE OF TERMINATION (NOT) AT THE COMPLETION OF THE PROJECT. THE CONTRACTOR SHALL BE NAMED AS THE OPERATOR IN THE (NOI) AND MAY ENTER A STATEMENT ON THE FORM THAT "THERE ARE NO ATTACHMENTS SUBMITTED WITH THIS DOCUMENT" TO ADDRESS THAT THE CONTRACTOR DID PREPARE THE STORMWATER POLLUTION PROTECTION PLAN.
6. PLACE CE's (CONSTRUCTION ENTRANCES) ADJACENT TO STAGING AREAS OR ACCESS GATES TO WORK ZONES. PROVIDE SILT FENCE OR EQUIVALENT TO MATERIAL STORAGE LOCATIONS.

MAINTENANCE PLAN

1. ALL EROSION AND SEDIMENT CONTROL PRACTICES WILL BE CHECKED FOR STABILITY AND OPERATION FOLLOWING EVERY RUNOFF-PRODUCING RAINFALL BUT IN NO CASE LESS THAN ONCE EVERY WEEK. ANY NEEDED REPAIRS WILL BE MADE IMMEDIATELY TO MAINTAIN ALL PRACTICES AS DESIGNED.
2. SEDIMENT WILL BE REMOVED FROM THE INLET PROTECTION DEVICES WHEN STORAGE CAPACITY HAS BEEN APPROXIMATELY 50% FILLED OR AS DIRECTED BY THE ENGINEER. GRAVEL WILL BE CLEANED OR REPLACED WHEN SEDIMENT POOL NO LONGER DRAINS PROPERLY.
3. SEDIMENT WILL BE REMOVED FROM BEHIND THE TEMPORARY SILT FENCE WHEN IT BECOMES 0.5 FT. DEEP AT THE FENCE. THE TEMPORARY SILT FENCE WILL BE REPAIRED AS NECESSARY TO MAINTAIN A BARRIER. TEMPORARY DIVERSION SWALES WILL BE CHECKED AFTER EVERY RAINFALL AND ANY SIGNIFICANT SEDIMENT BUILD UP WILL BE REMOVED AS DIRECTED BY THE ENGINEER.
4. SEDIMENTS SHALL BE REMOVED FROM THE WEST POND AND RE-SEEDED PER FDOT SPEC 570 AT THE END OF THE PROJECT.
5. SEDIMENT SHALL BE REMOVED FROM ALL STORM DRAIN PIPES AT THE END OF THE PROJECT.
6. THE COST OF ALL EROSION AND SEDIMENT CONTROL WORK SHALL BE CONSIDERED INCIDENTAL TO ITEM C-105- MOBILIZATION.

TYPE III SILT FENCE

N.T.S.

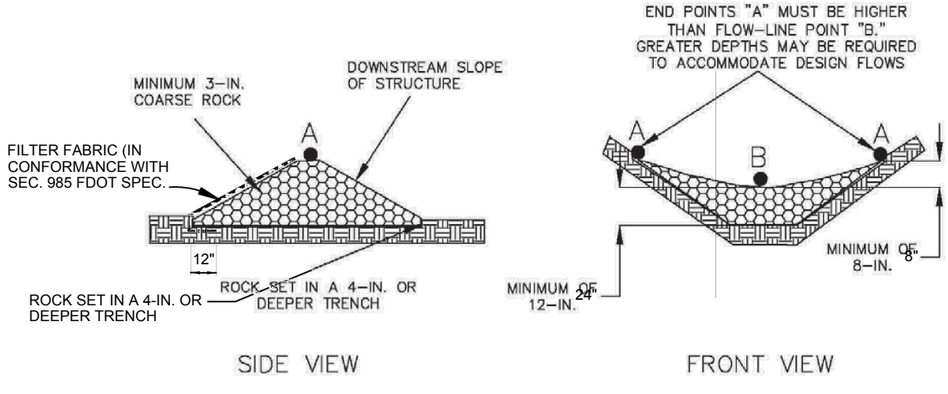

ROCK CHECK STRUCTURE

N.T.S.

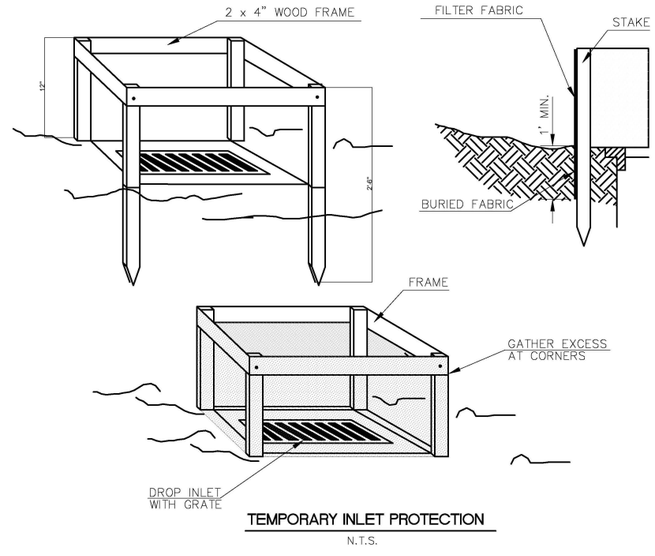

TEMPORARY INLET PROTECTION

N.T.S.

DESTIN - FORT WALTON BEACH AIRPORT

OKALOOSA COUNTY

INFRASTRUCTURE CONSULTING & ENGINEERING
5550 WEST IDLEWILD AVE. SUITE 102
TAMPA, FLORIDA 33634 (813) 330-2701
CERTIFICATE OF AUTHORIZATION NO.: 30862

Project Name:
CONSTRUCT WEST APRON EXPANSION AND INFRASTRUCTURE AT VPS

Designer:	Checked by:
HJ	JNG
Technician:	ICE Proj. No.:
MA	18-46

Engineer of Record:

Notes:

REVISIONS

No.	Description	Date	By

Drawing Name:
STORMWATER POLLUTION PREVENTION PLAN

FAA A.I.P. Project No.:
3-12-0081-029-2018

FDOT Project No.:

Date:	Sheet Number:
MAY 2019	C4.13

File Path: Y:\Okaloosa County\VPS (Destin-FWB Airport)\18-46 VPS West Apron\CADD-dwg\015-C4.13 SWPPP.dwg Date: 4/29/2019 2:59 PM

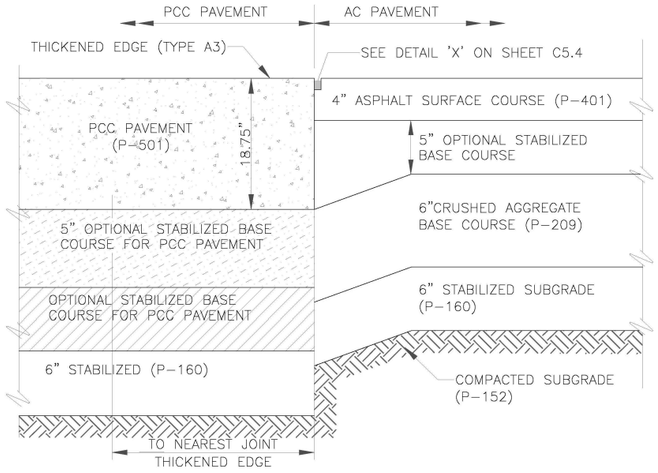

TYPICAL SECTION: RIGID-FLEXIBLE PAVEMENT JUNCTURE

N.T.S.

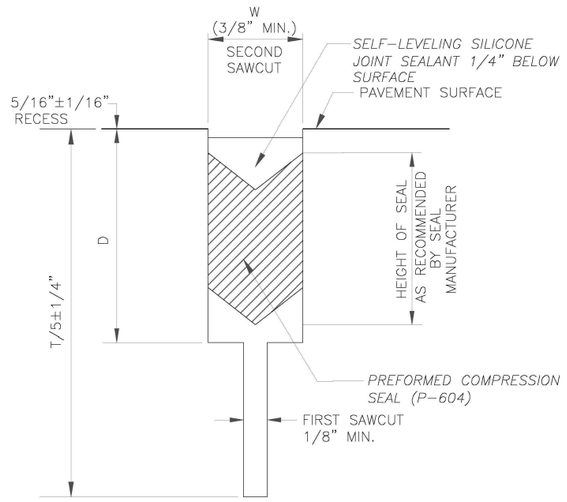

DETAIL 2 CONTRACTION JOINT SEALANT (OPTIONAL)

N.T.S.

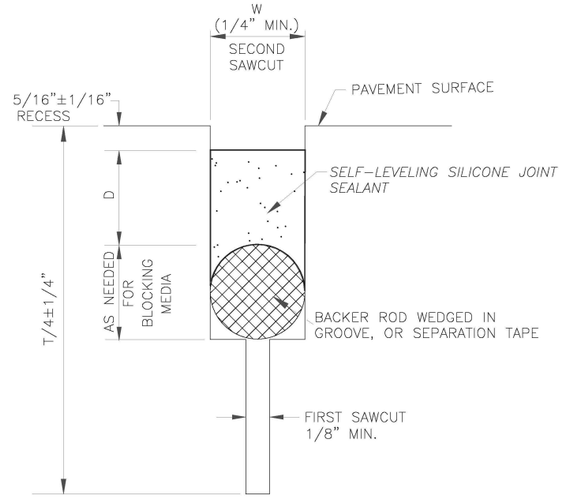

DETAIL 2 CONTRACTION JOINT SEALANT

N.T.S.

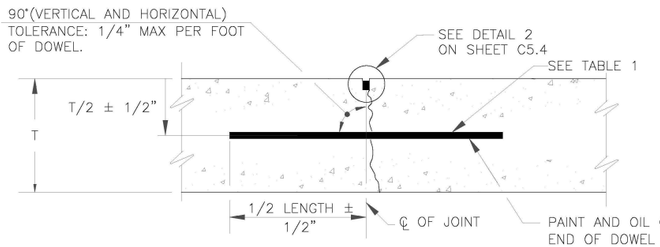

TYPE C - DOWELED CONTRACTION JOINT

N.T.S.

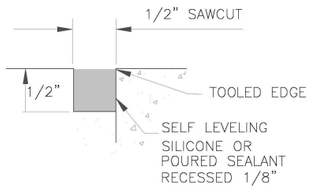

DETAIL 'X'

N.T.S.

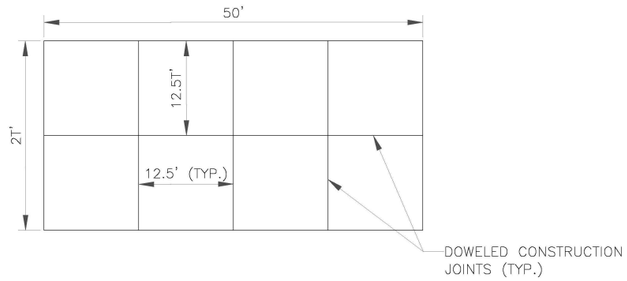

TYPICAL CONCRETE HARDSTAND JOINT LAYOUT PLAN

N.T.S.

TABLE1 DOWEL BAR DIMENSIONS			
T	LENGTH	DIA.	SPACING
8"	18"	1"	12" O.C.
15"	20"	1-1/4"	15" O.C.

FLY VPS
DESTIN - FORT WALTON BEACH AIRPORT

OKALOOSA COUNTY

INFRASTRUCTURE CONSULTING & ENGINEERING
5550 WEST IDLEWILD AVE. SUITE 102
TAMPA, FLORIDA 33634 (813) 330-2701
CERTIFICATE OF AUTHORIZATION NO.: 30862

Project Name:
CONSTRUCT WEST APRON EXPANSION AND INFRASTRUCTURE AT VPS

Designer:	Checked by:
HJ	JNG
Technician:	ICE Proj. No.:
MA	18-46

Engineer of Record:

Notes:

REVISIONS

No.	Description	Date	By

Drawing Name:
CONCRETE JOINT PLAN AND DETAILS

FAA A.I.P. Project No.:
3-12-0081-029-2018

FDOT Project No.:

Date:	Sheet Number:
MAY 2019	C5.1

File Path: Y:\Okaloosa County\VPS (Destin-FWB Airport)\18-46 VPS West Apron\CADD-dwg\016-C5.1-CONCRETE JOINT PLAN AND DETAILS.dwg Date: 5/17/2019 8:28 AM

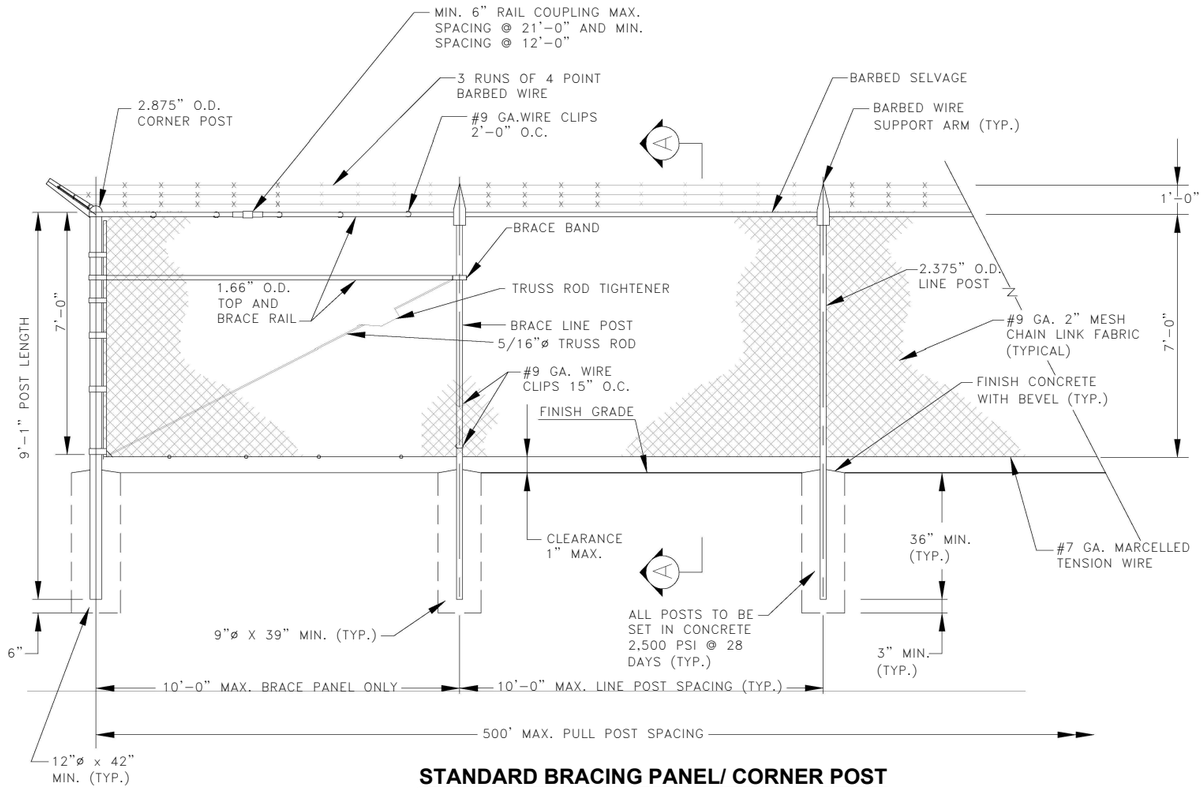

STANDARD BRACING PANEL/ CORNER POST

N.T.S.

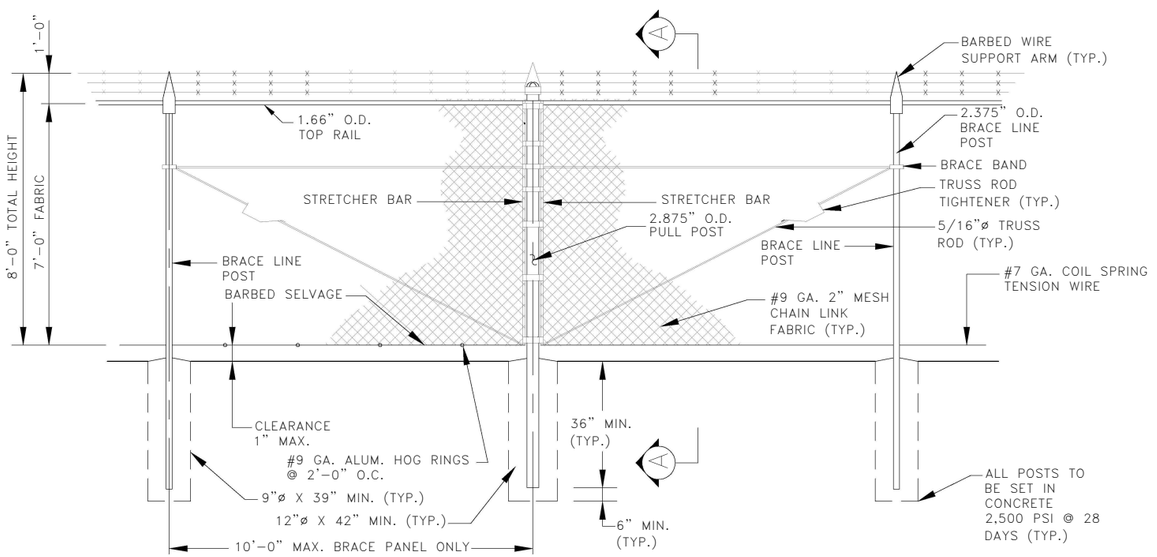

STANDARD BRACING/ PULL POST PANEL

N.T.S.

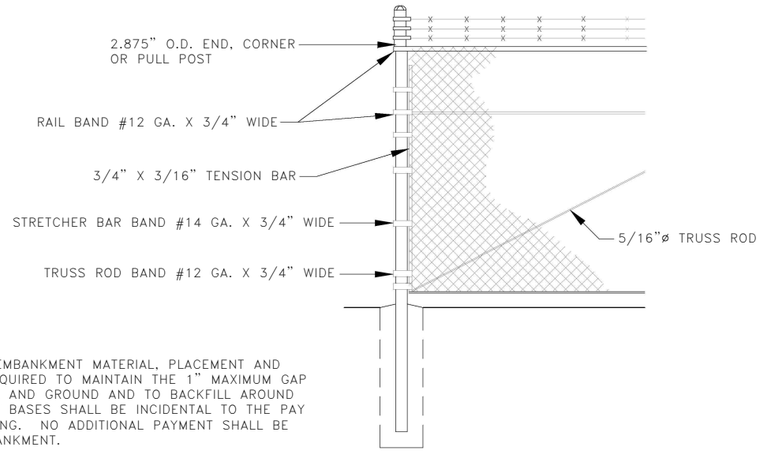

NOTES:

1. ALL BACKFILL/EMBANKMENT MATERIAL, PLACEMENT AND COMPACTION REQUIRED TO MAINTAIN THE 1" MAXIMUM GAP BETWEEN FENCE AND GROUND AND TO BACKFILL AROUND CONCRETE POST BASES SHALL BE INCIDENTAL TO THE PAY ITEM FOR FENCING. NO ADDITIONAL PAYMENT SHALL BE MADE FOR EMBANKMENT.
2. AT LOCATIONS SHOWN IN THE PLANS OR WHERE DIRECTED BY THE ENGINEER, HIGH DENSITY POLYETHYLENE SLATS WOVEN THROUGH THE CHAIN LINK FABRIC SHALL BE INCLUDED. SLATS SHALL BE INDUSTRIAL QUALITY WITH ULTRAVIOLET INHIBITORS. SLATS SHALL BE INSTALLED VERTICALLY WITH EACH SLAT EXTENDING THE ENTIRE HEIGHT OF THE FABRIC AND SECURED FROM SLIDING DOWN. OWNER TO SELECT COLOR.
3. FOR TEMPORARY FENCE THE CONCRETE POST FOUNDATION AND TOP RAIL ARE NOT RQUIRED.

TERMINAL DETAIL

N.T.S.

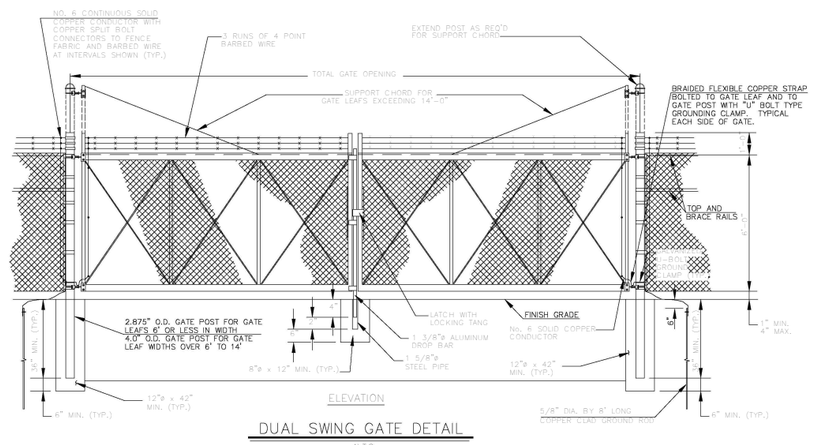

DUAL SWING GATE DETAIL

N.T.S

DESTIN - FORT WALTON BEACH AIRPORT

INFRASTRUCTURE CONSULTING & ENGINEERING
5550 WEST IDLEWILD AVE. SUITE 102
TAMPA, FLORIDA 33634 (813) 330-2701
CERTIFICATE OF AUTHORIZATION NO.: 30862

Project Name:
CONSTRUCT WEST APRON EXPANSION AND INFRASTRUCTURE AT VPS

Designer:	Checked by:
HJ	JNG
Technician:	ICE Proj. No.:
MA	18-46

Engineer of Record:

Notes:

REVISIONS

No.	Description	Date	By

Drawing Name:
CHAIN LINK FENCE DETAILS

FAA A.I.P. Project No.:
3-12-0081-029-2018

FDOT Project No.:

Date:	Sheet Number:
MAY 2019	C6.1

File Path: Y:\Okaloosa County\VPS (Destin-FWB Airport)\18-46 VPS West Apron\CADD-dwg\0016-C6.1-C6.2-CHAIN LINK FENCE DETAILS.dwg Date: 5/17/2019 9:20 AM

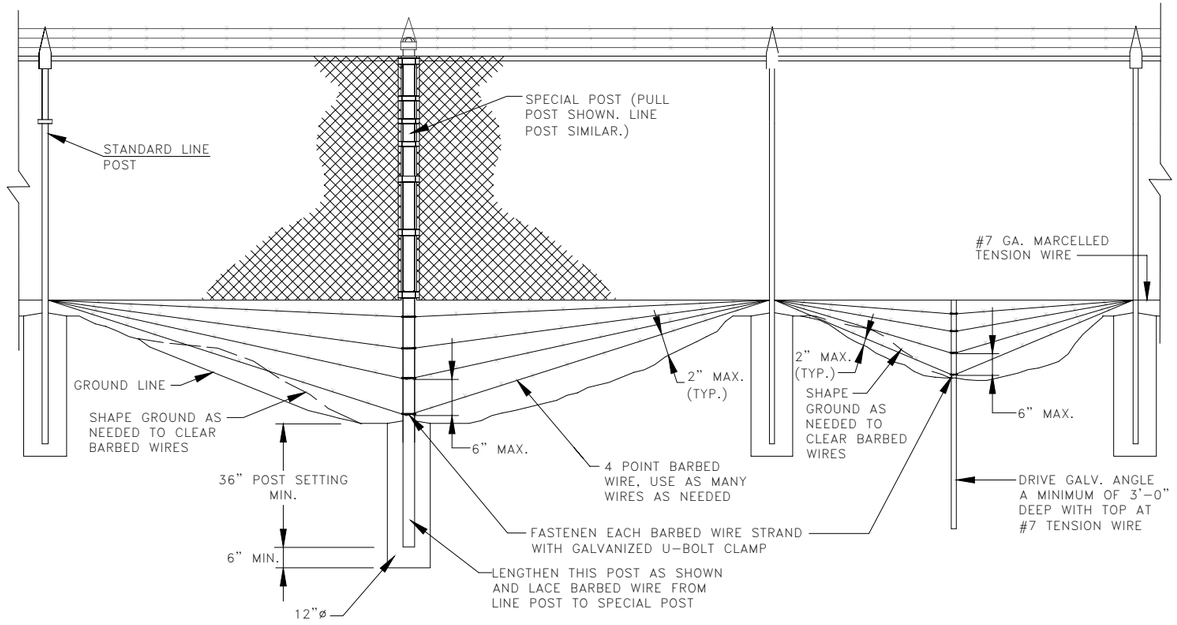

CONSTRUCTION METHOD
WHEN 2 BAYS SPAN DITCH

CONSTRUCTION METHOD
WHEN 1 BAY SPANS DITCH

NOTE: ALL FENCE DITCH CROSSING TREATMENTS SHALL BE CONSIDERED INCIDENTAL TO FENCE CONSTRUCTION.

BARBED WIRE DITCH TREATMENT
N.T.S.

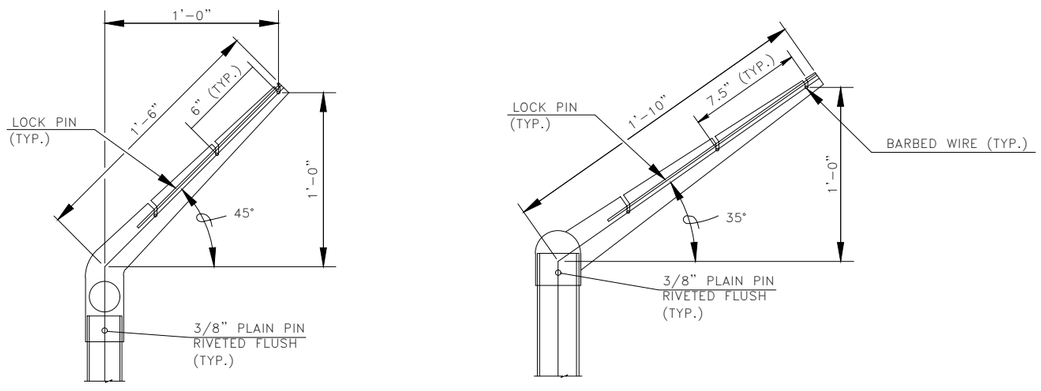

LINE POST

CORNER POST

NOTE: EXTENSION ARMS TO BE ANGLED OUTWARD AND AWAY FROM AIRFIELD SIDE OF FENCING (TYP.)

BARBED WIRE SUPPORT ARM DETAILS
N.T.S.

FENCE ELECTRICAL GROUNDING NOTE:

1. ELECTRICAL GROUNDS SHALL BE CONSTRUCTED AT THE FOLLOWING LOCATIONS:

A) WHERE A POWER LINE PASSES OVER OR UNDER THE FENCE, THE GROUND SHALL BE INSTALLED DIRECTLY BELOW THE POINT OF CROSSING.

B) AT MAXIMUM 500-FOOT INTERVALS ALONG THE FENCE.

C) AT EACH GATE LEAF AND EACH GATE POST ON BOTH SIDES OF EACH GATE.

2. THE GROUND SHALL BE ACCOMPLISHED WITH A COPPER-CLAD ROD 8 FEET LONG AND A MINIMUM OF 5/8 INCH IN DIAMETER DRIVEN VERTICALLY UNTIL THE TOP IS 6 INCHES BELOW THE GROUND SURFACE. A NO. 6 SOLID COPPER CONDUCTOR SHALL BE CLAMPED TO THE ROD AND TO THE FENCE IN SUCH A MANNER THAT EACH ELEMENT OF THE FENCE IS GROUNDED.

3. INSTALLATION OF GROUND RODS SHALL NOT CONSTITUTE A PAY ITEM AND SHALL BE CONSIDERED INCIDENTAL TO THE LINE ITEM FOR FENCING.

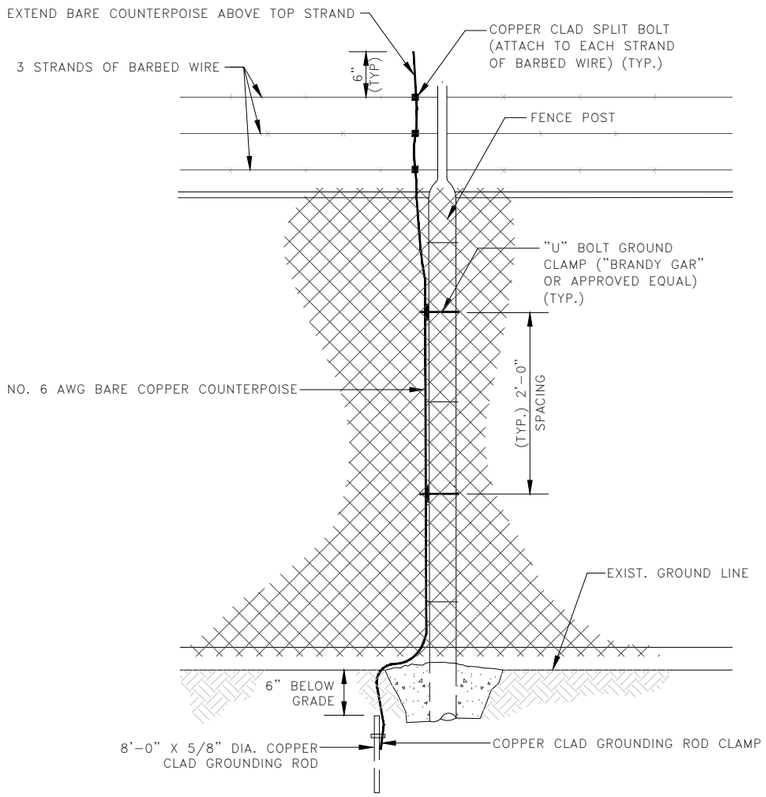

TYPICAL FENCE GROUNDING DETAIL
N.T.S.

DESTIN - FORT WALTON BEACH AIRPORT

OKALOOSA COUNTY

INFRASTRUCTURE CONSULTING & ENGINEERING
5550 WEST IDLEWILD AVE. SUITE 102
TAMPA, FLORIDA 33634 (813) 330-2701
CERTIFICATE OF AUTHORIZATION NO.: 30862

Project Name:
CONSTRUCT WEST APRON EXPANSION AND INFRASTRUCTURE AT VPS

Designer:	Checked by:
HJ	JNG
Technician:	ICE Proj. No.:
MA	18-46

Engineer of Record:

Notes:

REVISIONS

No.	Description	Date	By

Drawing Name:
CHAIN LINK FENCE DETAILS

A.I.P. Project No.:
3-12-0081-029-2018

T Project No.:

Date:	Sheet Number:
MAY 2019	C6.2

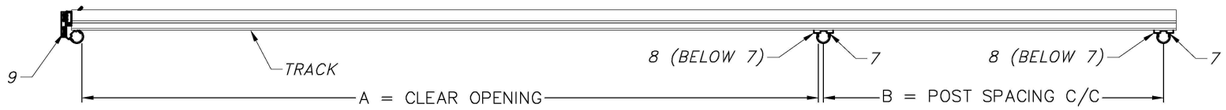

PLAN VIEW
Scale: None

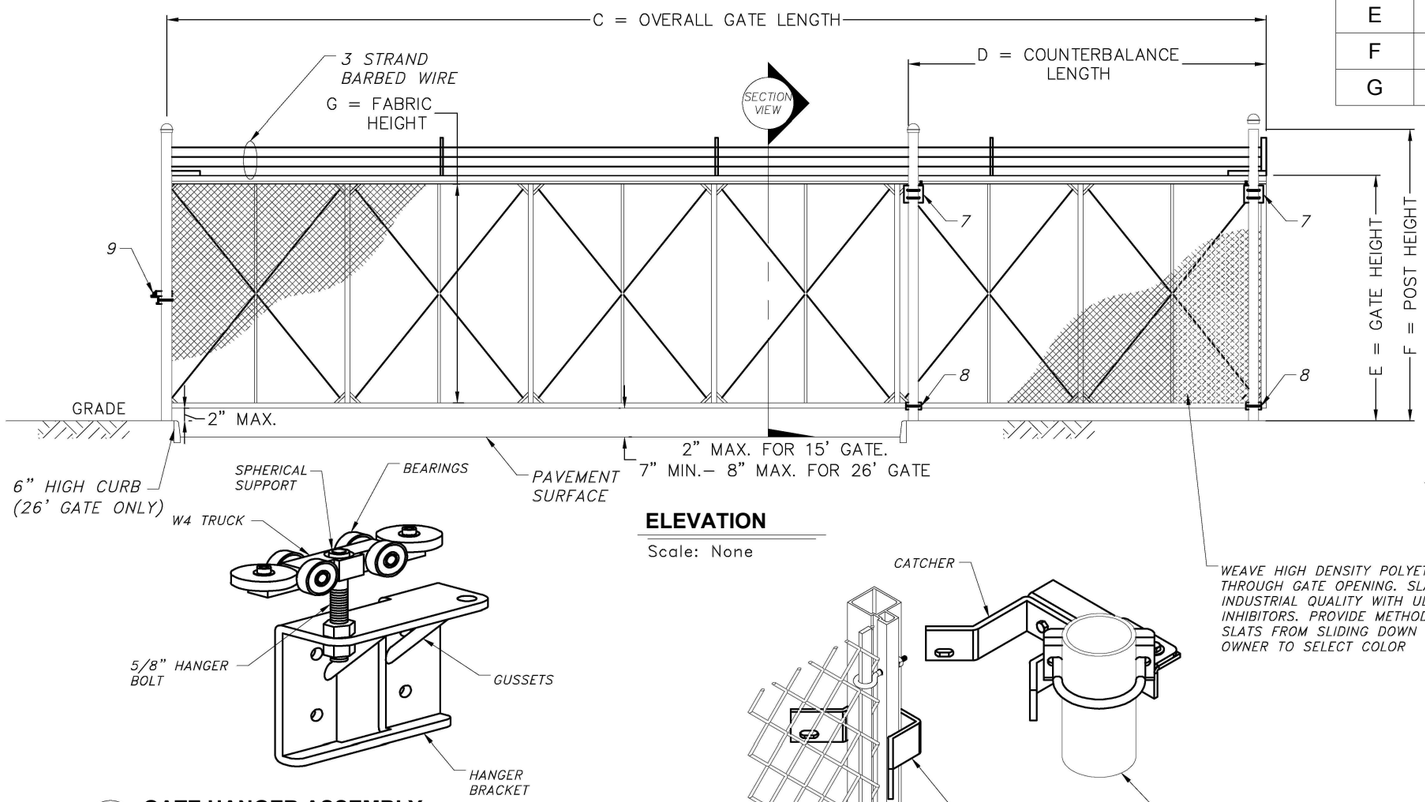

ELEVATION
Scale: None

SECTION
Scale: None

WEAVE HIGH DENSITY POLYETHYLENE SLATS THROUGH GATE OPENING. SLATS SHALL BE INDUSTRIAL QUALITY WITH ULTRA VIOLET INHIBITORS. PROVIDE METHOD OF SECURING SLATS FROM SLIDING DOWN OVER TIME. OWNER TO SELECT COLOR

7 GATE HANGER ASSEMBLY
Scale: None

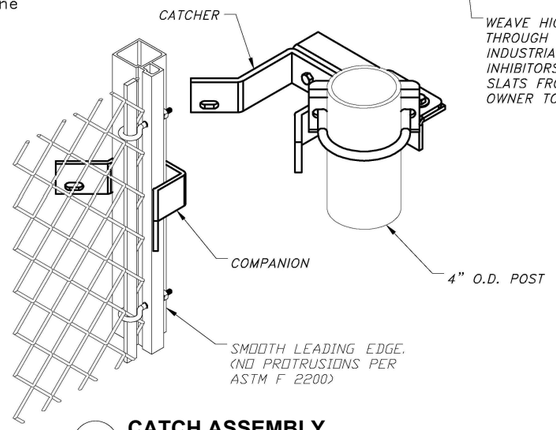

9 CATCH ASSEMBLY
Scale: None

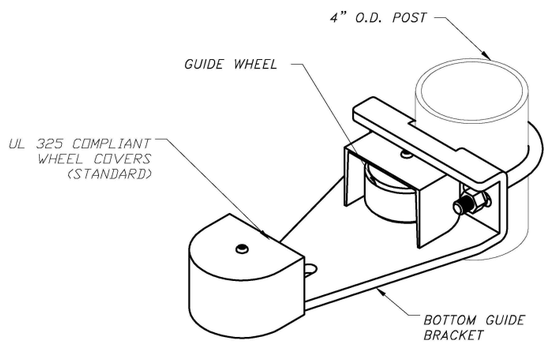

8 BOTTOM GUIDE
Scale: None

NOTES:
1. ALL FITTINGS STANDARDLY PROVIDED FOR 4" O.D. POSTS. OTHER SIZES AVAILABLE UPON REQUEST.
2. DIRECTION OF GATE OPENING MAY VARY. REFER TO PLANS.
3. GATE TO INCLUDE HIGH DENSITY POLYETHYLENE SLATS WOVEN THROUGH THE CHAIN LINK FABRIC. SLATS SHALL BE INDUSTRIAL QUALITY WITH ULTRAVIOLET INHIBITORS. SLATS SHALL BE INSTALLED VERTICALLY OR AT 45 DEGREES WITH EACH SLAT EXTENDING THE ENTIRE HEIGHT OF THE FABRIC AND SECURED FROM SLIDING DOWN. OWNER TO SELECT COLOR. COST TO BE INCIDENTAL TO UNIT COST OF 15' SLIDING GATE.
4. GATES TO BE COMPATIBLE WITH A LINEAR INDUCTION SLIDE GATE OPERATOR AS MANUFACTURED BY VMAG, LLC. GATE SHOP DRAWING MUST BE APPROVED BY VMAG OPERATOR INSTALLER.

DIMENSION CHART

MARK	DESCRIPTION	FORMULA	DIM.	
A	CLEAR OPENING	A	15'	26'
B	COUNTERBALANCE POST SPACING C/C	(A/2)-11"	6' - 7"	12' - 1"
C	OVERALL GATE LENGTH	A x 1.5	22' - 6"	39' - 0"
D	COUNTERBALANCE LENGTH	A x 0.5	7' - 6"	13' - 0"
E	NOMINAL GATE HEIGHT	E	7' - 0"	7' - 6"
F	POST HEIGHT (W BARB ARMS)	E + 1'-6"	8' - 6"	9' - 0"
G	FABRIC HEIGHT	E - 1'-0"	6' - 0"	6' - 0"

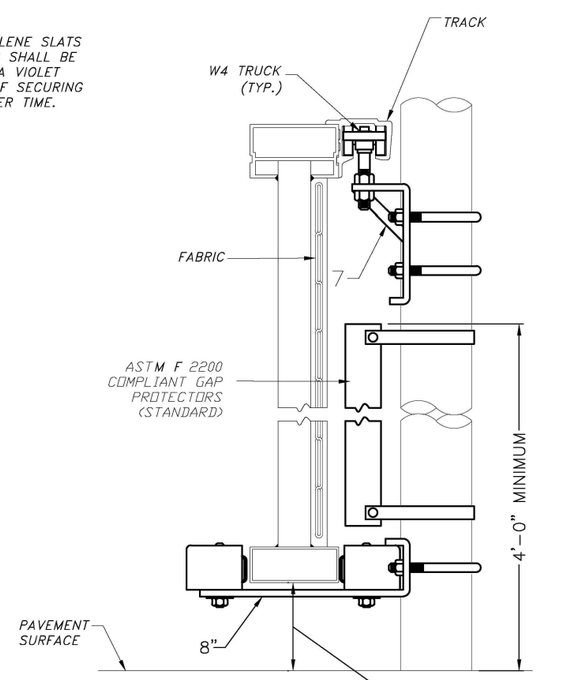

ENLARGED SECTION
Scale: None

DESTIN - FORT WALTON BEACH AIRPORT

OKALOOSA COUNTY

INFRASTRUCTURE CONSULTING & ENGINEERING
5550 WEST IDLEWILD AVE. SUITE 102
TAMPA, FLORIDA 33634 (813) 330-2701
CERTIFICATE OF AUTHORIZATION NO.: 30862

Project Name:
CONSTRUCT WEST APRON EXPANSION AND INFRASTRUCTURE AT VPS

Designer:	Checked by:
HJ	JNG
Technician:	ICE Proj. No.:
MA	18-46

Engineer of Record:

Notes:

REVISIONS

No.	Description	Date	By

Drawing Name:
GATE DETAILS

FAA A.I.P. Project No.:
3-12-0081-029-2018

FDOT Project No.:

Date: MAY 2019

Sheet Number: C6.3

File Path: Y:\Okaloosa County\VPS (Destin-FWB Airport)\18-46 VPS West Apron\CADD-dwg\017-C6.3-C6.4-GATE DETAILS.dwg Date: 5/17/2019 9:23 AM

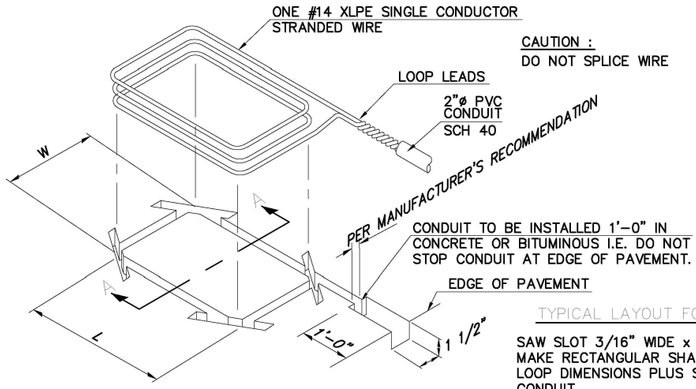

CAUTION : DO NOT SPLICE WIRE

CONDUIT TO BE INSTALLED 1'-0" IN CONCRETE OR BITUMINOUS I.E. DO NOT STOP CONDUIT AT EDGE OF PAVEMENT.

EDGE OF PAVEMENT

TYPICAL LAYOUT FOR LOOP

SAW SLOT 3/16" WIDE x 1-1/2" DEEP. MAKE RECTANGULAR SHAPE TO SPECIFIED LOOP DIMENSIONS PLUS SLOT FOR LEAD CONDUIT.
GROUT WITH NO. 202 WEATHERBAN SEALANT. A PRODUCT OF 3M CO. OR APPROVED EQUAL.

CAUTION : DO NOT FRACTURE WIRE INSULATION. LOOPS SHORTED TO GROUND WILL CAUSE DETECTOR MALFUNCTION. WHEN PLACING WIRE IN THE SLOT, DO NOT USE SCREWDRIVER OR OTHER SHARP TOOLS.

NOTE:
GROOVE SECTION MAY VARY AS PER MANUFACTURER'S REQUIREMENTS. CONTRACTOR TO SUBMIT METHOD OF LOOP INSTALLATION FOR ENGINEER'S APPROVAL PRIOR TO CONSTRUCTION.

DETECTOR LOOP AND SAW SLOT – PERSPECTIVE VIEW
N.T.S.

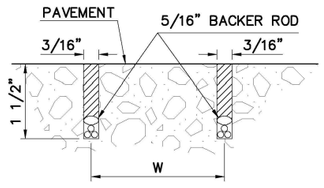

SECTION A–A

NOTES :
1. LOOP LEADS ARE LIMITED TO 100 FEET.
2. LOOP LEADS MUST HAVE FOUR (4) TWIST PER FOOT.
3. LOOP AND LOOP LEADS MUST BE LOCATED AT LEAST 18" FROM ANY ELECTRICAL POWER SERVICE OR RUNS AND OR STEEL PLATFORMS.
4. LOOP LEADS MUST BE IN SEPARATE CONDUIT BETWEEN LOOP AND DETECTOR. THEY MUST NOT SHARE CONDUIT WITH OTHER WIRING OR LEADS FROM OTHER LOOPS.
5. USE #14 XLPE SINGLE CONDUCTOR STRANDED WIRE.
6. ALL WIRE TO BE CONTINUOUS WITHOUT SPLICING.

DETECTOR LOOP – SECTION VIEW
N.T.S.

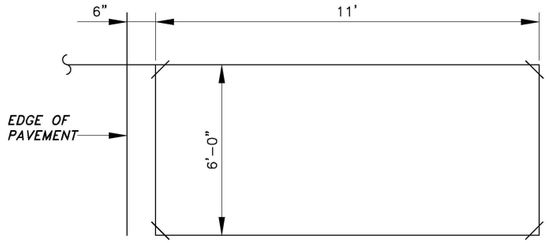

DETECTOR LOOP DETAIL – PLAN VIEW
N.T.S.

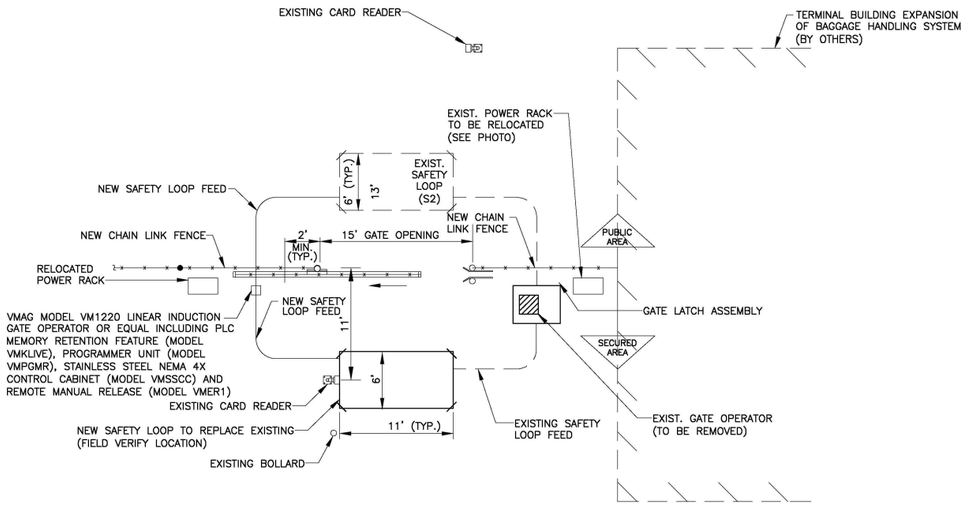

SCHEMATIC PLAN FOR OPERATED CANTILEVER SLIDE GATE
N.T.S.

EXISTING WEST GATE
N.T.S.

DESTIN - FORT WALTON BEACH AIRPORT

OKALOOSA COUNTY

INFRASTRUCTURE CONSULTING & ENGINEERING
5550 WEST IDLEWILD AVE. SUITE 102
TAMPA, FLORIDA 33634 (813) 330-2701
CERTIFICATE OF AUTHORIZATION NO.: 30862

Project Name:
CONSTRUCT WEST APRON EXPANSION AND INFRASTRUCTURE AT VPS

Designer:	Checked by:
HJ	JNG
Technician:	ICE Proj. No.:
MA	18-46

Engineer of Record:

Notes:

REVISIONS

No.	Description	Date	By

Drawing Name:
GATE DETAILS

FAA A.I.P. Project No.:
3-12-0081-029-2018

FDOT Project No.:

Date: MAY 2019

Sheet Number: C6.4

File Path: Y:\Okaloosa County\VPS (Destin-FWB Airport)\18-46 VPS West Apron\CADD-dwg\017-C6.3-C6.4-GATE DETAILS.dwg Date: 5/17/2019 9:23 AM

EXIST. MARKING STRIPES
(REMOVE STRIPES WITHIN LIMITS OF NEW HANDICAP STALL. SEE SHEET C7.4)

EXIST. HANDICAPPED SIGNS (TYP.)

EXIST. STOP SIGN

EXIST. DIRECTIONAL ARROW
(TO BE REMOVED TYP.)

EXIST. TAXIWAY EDGE STRIPES
(TO BE REMOVED)

EXIST. TAXIWAY EDGE STRIPES
(TO BE REMOVED)

EXIST. TAXIWAY CENTERLINE STRIPE
(TO BE REMOVED)

CONTROL POINT 1001
SET NAIL & DISK
N:549685.92
E:1322794.81

STA:107+01.72
OFF:95.86'R

STA:105+42.98
OFF:103.87'R

.NOTE:
AIRCRAFT APRON MARKING REMOVAL TO BE PERFORMED AT NIGHT BEGINNING AFTER THE LAST FLIGHT HAS ARRIVED AND ENDING 1 HOUR BEFORE THE FIRST FLIGHT DEPARTS THE FOLLOWING MORNING.THIS IS NORMALLY FROM10:00 PM TO 5:00 AM BUT CAN VARY DEPENDING ON AIRLINE SCHEDULES.

0 15 30 60

MATCH LINE SHEET C7.2

File Path: Y:\Okaloosa County\VPS (Destin-FWB Airport)\18-46 VPS West Apron\CADD-dwg\019-C7.1-7.5-MARKING AND SIGNAGE AND REMOVAL PLANS.dwg Date: 5/20/2019 8:50 AM

FLY VPS

DESTIN - FORT WALTON BEACH AIRPORT

OKALOOSA COUNTY

INFRASTRUCTURE CONSULTING & ENGINEERING
5550 WEST IDLEWILD AVE. SUITE 102
TAMPA, FLORIDA 33634 (813) 330-2701
CERTIFICATE OF AUTHORIZATION NO.: 30862

Project Name:
CONSTRUCT WEST APRON EXPANSION AND INFRASTRUCTURE AT VPS

Designer:	Checked by:
HJ	JNG
Technician:	ICE Proj. No.:
MA	18-46

Engineer of Record:

Notes:

REVISIONS

No.	Description	Date	By

Drawing Name:
MARKING REMOVAL PLAN NO. 1

FAA A.I.P. Project No.:
3-12-0081-029-2018

FDOT Project No.:

Date:	Sheet Number:
MAY 2019	C7.1

MATCH LINE SHEET C7.1

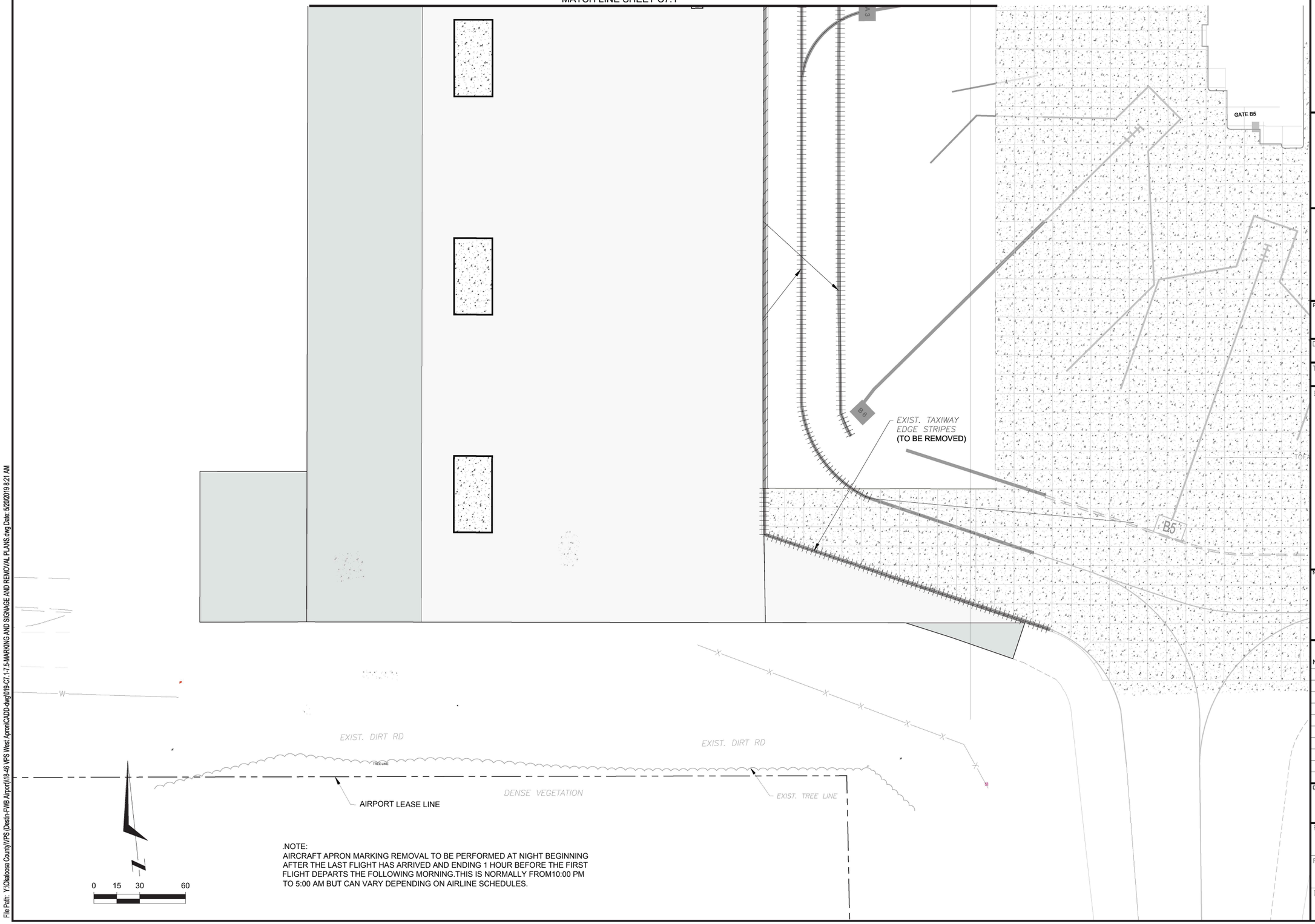

.NOTE:
AIRCRAFT APRON MARKING REMOVAL TO BE PERFORMED AT NIGHT BEGINNING AFTER THE LAST FLIGHT HAS ARRIVED AND ENDING 1 HOUR BEFORE THE FIRST FLIGHT DEPARTS THE FOLLOWING MORNING.THIS IS NORMALLY FROM10:00 PM TO 5:00 AM BUT CAN VARY DEPENDING ON AIRLINE SCHEDULES.

File Path: Y:\Okaloosa County\VPS [Destin-FWB Airport]\18-46 VPS West Apron\CADD-dwg\019-C7.1-7.5-MARKING AND SIGNAGE AND REMOVAL PLANS.dwg Date: 5/20/2019 8:21 AM

FLY VPS

DESTIN - FORT WALTON BEACH AIRPORT

OKALOOSA COUNTY

INFRASTRUCTURE CONSULTING & ENGINEERING
5550 WEST IDLEWILD AVE. SUITE 102
TAMPA, FLORIDA 33634 (813) 330-2701
CERTIFICATE OF AUTHORIZATION NO.: 30862

Project Name:
CONSTRUCT WEST APRON EXPANSION AND INFRASTRUCTURE AT VPS

Designer:	Checked by:
HJ	JNG
Technician:	ICE Proj. No.:
MA	18-46

Engineer of Record:

Notes:

REVISIONS

No.	Description	Date	By

Drawing Name:
MARKING REMOVAL PLAN NO. 2

FAA A.I.P. Project No.:
3-12-0081-029-2018

FDOT Project No.:

Date:	Sheet Number:
MAY 2019	C7.2

SIGN SUMMARY				
SIGN STYLE	MUTCD	LEGEND	DIMENSIONS	SIGN TOTALS
S1	R1-1	STOP	30" x 30"	5
S2	CUSTOM	SHUTTLE STOP	24" x 18"	4
S3	CUSTOM	ROW A	18" x 24"	28

NOTE:

1. ALL ROADWAY AND PARKING LOT MARKINGS ARE TO BE CONSTRUCTED TO FDOT DESIGN STANDARDS 2019 INDEX NO. 17346 UNLESS OTHERWISE NOTED.

CREDIT CARD LOT PARKING SUMMARY		
EXISTING SPACES:	679	(15 HC)
SPACES REMOVED:	164	(212 SPACE INCREASE)
NEW SPACES:	376	
TOTAL:	891	(17 HC)

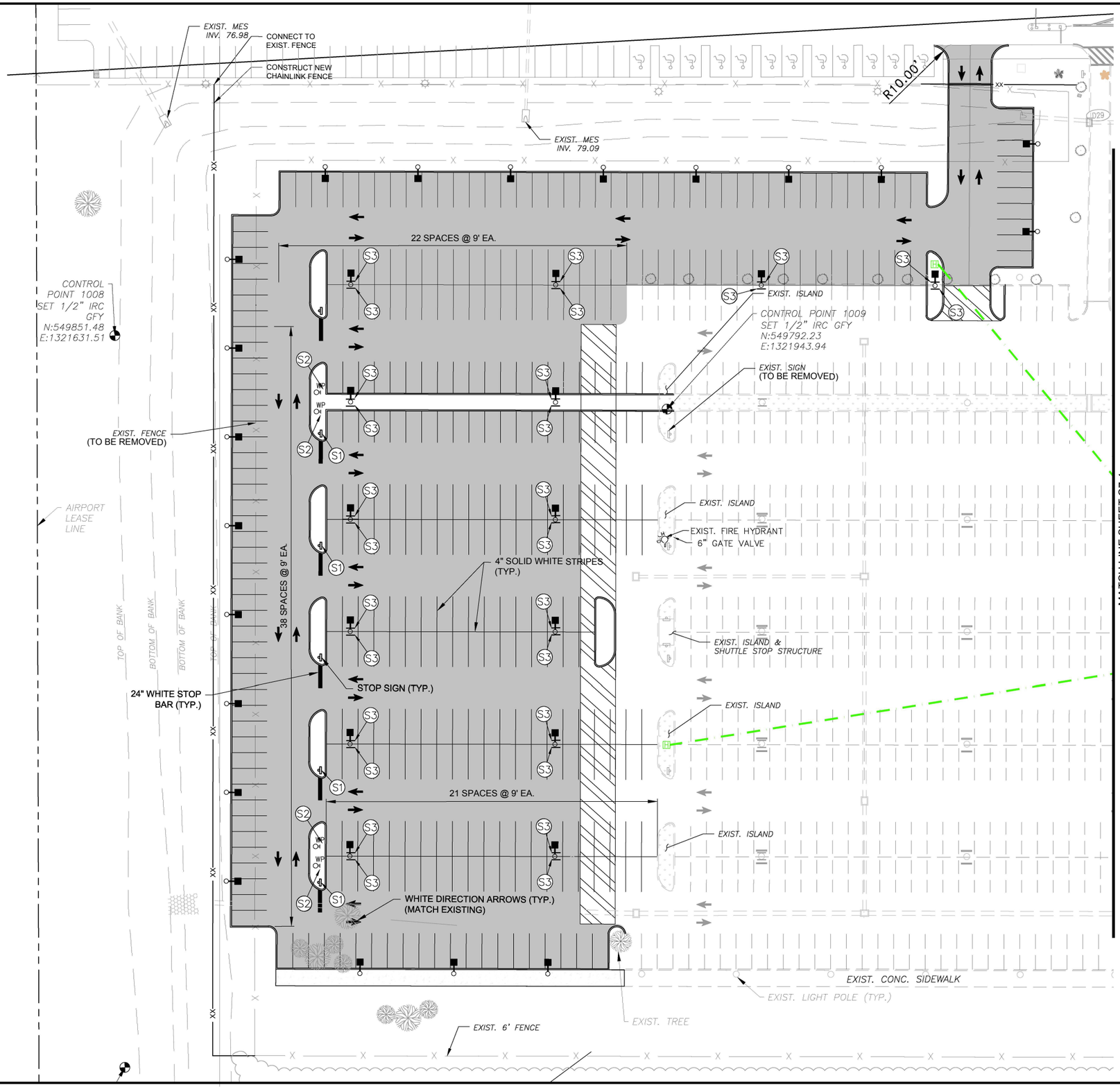

File Path: Y:\Okaloosa County\VPS (Destin-FWB Airport)\18-46 VPS West Apron\CADD-dwg\019-C7.1-7.5-MARKING AND SIGNAGE AND REMOVAL PLANS.dwg Date: 5/17/2019 1:54 PM

FLY VPS

DESTIN - FORT WALTON BEACH AIRPORT

OKALOOSA COUNTY

INFRASTRUCTURE CONSULTING & ENGINEERING
5550 WEST IDLEWILD AVE. SUITE 102
TAMPA, FLORIDA 33634 (813) 330-2701
CERTIFICATE OF AUTHORIZATION NO.: 30862

Project Name:
CONSTRUCT WEST APRON EXPANSION AND INFRASTRUCTURE AT VPS

Designer:	Checked by:
HJ	JNG
Technician:	ICE Proj. No.:
MA	18-46

Engineer of Record:

Notes:

REVISIONS

No.	Description	Date	By

Drawing Name:
MARKING AND SIGNAGE PLAN NO. 1

FAA A.I.P. Project No.:
3-12-0081-029-2018

FDOT Project No.:

Date:	Sheet Number:
MAY 2019	C7.3

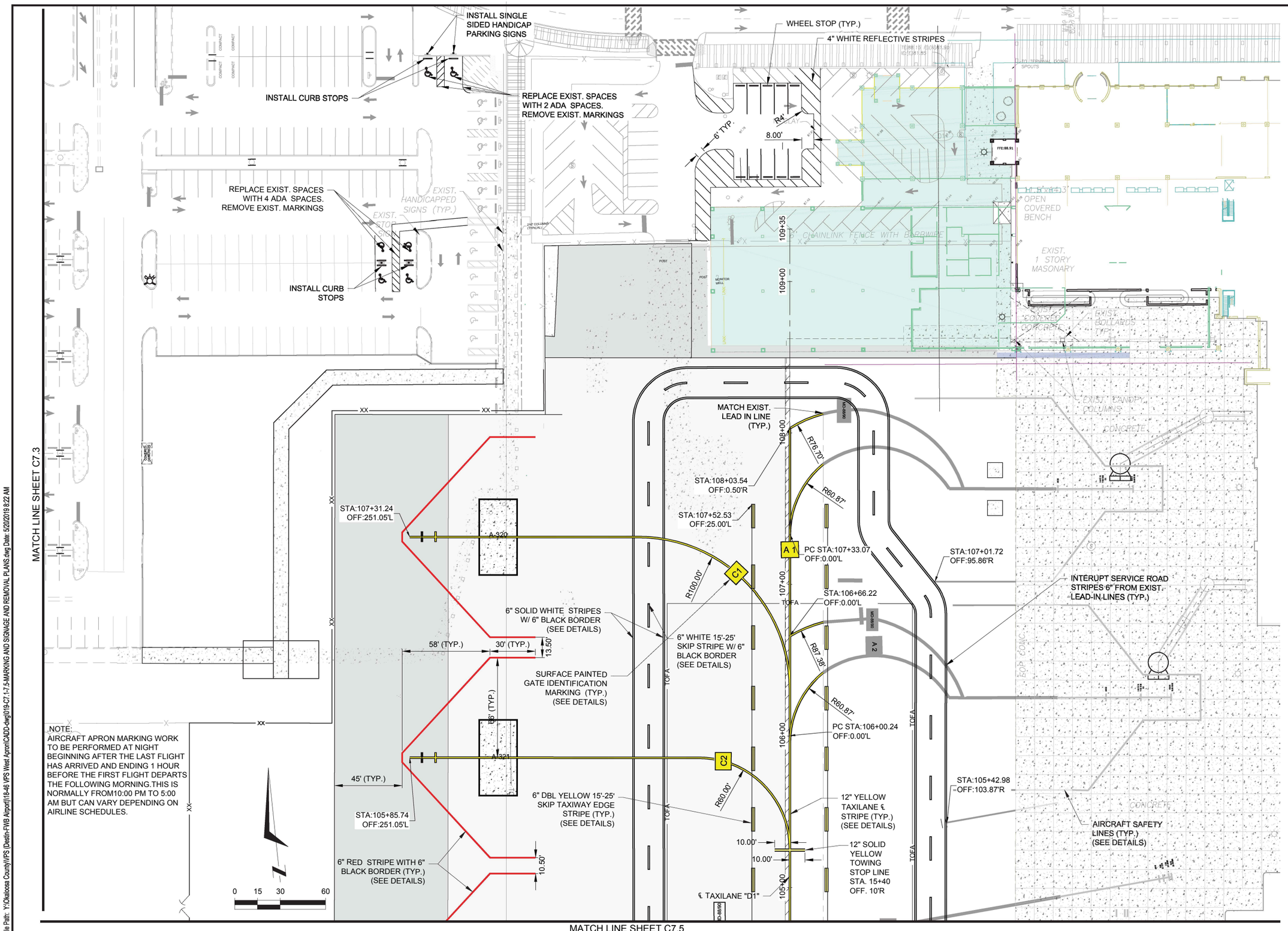

FLY VPS

DESTIN - FORT WALTON BEACH AIRPORT

OKALOOSA COUNTY

INFRASTRUCTURE CONSULTING & ENGINEERING
5550 WEST IDLEWILD AVE. SUITE 102
TAMPA, FLORIDA 33634 (813) 330-2701
CERTIFICATE OF AUTHORIZATION NO.: 30862

Project Name:
CONSTRUCT WEST APRON EXPANSION AND INFRASTRUCTURE AT VPS

Designer:	Checked by:
HJ	JNG
Technician:	ICE Proj. No.:
MA	18-46

Engineer of Record:

Notes:

REVISIONS

No.	Description	Date	By

Drawing Name:
MARKING AND SIGNAGE PLAN NO. 2

FAA A.I.P. Project No.:
3-12-0081-029-2018

FDOT Project No.:

Date:	Sheet Number:
MAY 2019	C7.4

File Path: Y:\Okaloosa County\VPS (Destin-FWB Airport)\18-46 VPS West Apron\CADD-dwg\019-C7.1-7.5-MARKING AND SIGNAGE AND REMOVAL PLANS.dwg Date: 5/20/2019 8:22 AM

MATCH LINE SHEET C7.4

B737

B757

MP90

STOP TAXILANE EDGE STRIPE AT CENTERLINE STRIPE (TYP.)

6" WHITE 15'-25' SKIP STRIPE W/ 6" BLACK BORDER (SEE DETAILS)

6" SOLID WHITE STRIPES W/ 6" BLACK BORDER (SEE DETAILS)

TAXILANE EDGE LINE

℄ TAXILANE "D"

6" RED STRIPE WITH 6" BLACK BORDER (TYP.) (SEE DETAILS)

6" DBL YELLOW 15'-25' SKIP TAXIWAY EDGE STRIPE (TYP.) (SEE DETAILS)

12" YELLOW TAXILANE ℄ STRIPE (TYP.) (SEE DETAILS)

STOP TAXILANE EDGE STRIPE AT CENTERLINE STRIPE

58' (TYP.)

30' (TYP.)

60' (TYP.)

45' (TYP.)

10.50' TYP.

25'

10'

4'

R60.00'

R75.00'

R100.00'

104+00

103+00

102+00

101+00

100+00

TOFA

STA:103+00.73
OFF:251.05'L

STA:102+32.20
OFF:102.97'L

PT STA:102+32.55
OFF:25.00'L

PC STA:101+46.82
OFF:24.86'L

STA:104+20.67
OFF:103.97'R

STA:104+12.59
OFF:0.09'L

STA:102+72.53
OFF:31.64'R

STA:101+83.51
OFF:38.24'R

STA:101+26.12
OFF:38.40'R

MATCH EXIST. STRIPES

MATCH EXIST. CENTERLINE STRIPE

MATCH EXIST. STRIPES

GATE B5

B5

B6

CONCRETE

4" WHITE REFLECTIVE STRIPES CENTERED ON DUMP STATION INLET (SEE SHEET C8.2)

BFO

BFP CONC SLAB

FIBER VAULT

EXIST. VAULT

EXIST. DIRT RD

EXIST. DIRT RD

TREE LINE

DENSE VEGETATION

EXIST. TREE LINE

AIRPORT LEASE LINE

.NOTE:
AIRCRAFT APRON MARKING WORK TO BE PERFORMED AT NIGHT BEGINNING AFTER THE LAST FLIGHT HAS ARRIVED AND ENDING 1 HOUR BEFORE THE FIRST FLIGHT DEPARTS THE FOLLOWING MORNING.THIS IS NORMALLY FROM10:00 PM TO 5:00 AM BUT CAN VARY DEPENDING ON AIRLINE SCHEDULES.

0 15 30 60

File Path: Y:\Okaloosa County\VPS (Destin-FWB Airport)\18-46 VPS West Apron\CADD-dwg\019-C7.1-7.5-MARKING AND SIGNAGE AND REMOVAL PLANS.dwg Date: 5/20/2019 8:51 AM

FLY VPS

DESTIN - FORT WALTON BEACH AIRPORT

OKALOOSA COUNTY

INFRASTRUCTURE CONSULTING & ENGINEERING
5550 WEST IDLEWILD AVE. SUITE 102
TAMPA, FLORIDA 33634 (813) 330-2701
CERTIFICATE OF AUTHORIZATION NO.: 30862

Project Name:
CONSTRUCT WEST APRON EXPANSION AND INFRASTRUCTURE AT VPS

Designer:	Checked by:
HJ	JNG
Technician:	ICE Proj. No.:
MA	18-46

Engineer of Record:

Notes:

REVISIONS

No.	Description	Date	By

Drawing Name:
MARKING AND SIGNAGE PLAN NO. 3

FAA A.I.P. Project No.:
3-12-0081-029-2018

FDOT Project No.:

Date:	Sheet Number:
MAY 2019	C7.5

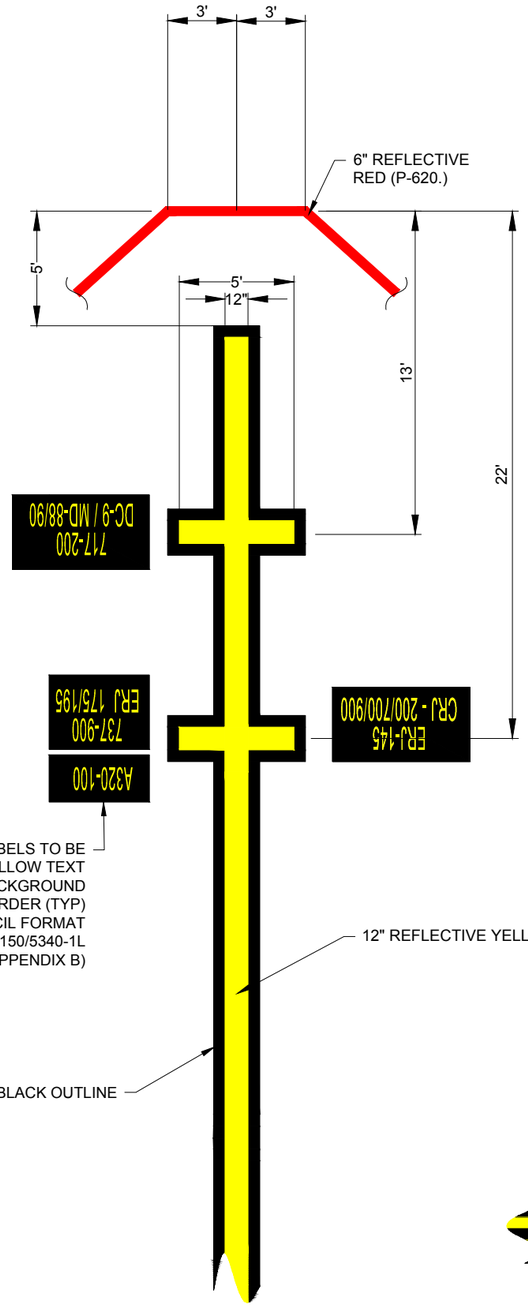

TYPICAL POSITION LEAD-IN LINE AND STOP BAR CONFIGURATION C1 THRU C5

N.T.S

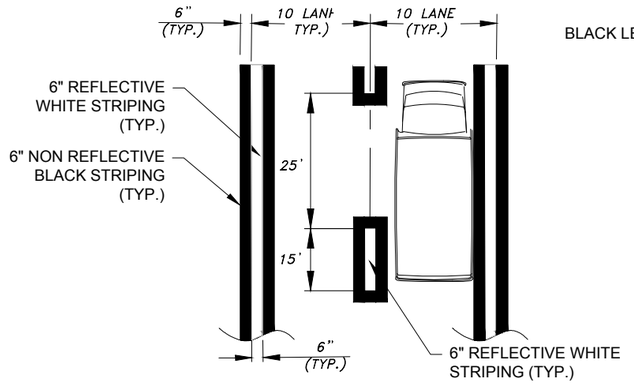

APRON ROADWAY MARKINGS

N.T.S.

NOTE:
IMMEDIATELLY UPON COMPLETION OF PAVING AN APPLICATION OF TEMPORARY PAINT IS TO BE APPLIED FOR ALL APRON MARKINGS, EXCLUDING REFLECTIVE BEADS AND THE BLACK BORDER, AND THE TEMPORARY TXILANE ℄ STRIPE SHOWN ON C3.4 IS TO BE REMOVED. AFTER A MINIMUM OF 24 DAYS AFTER PAVING IS COMPLETED, OR AS RECOMMENDED BY THE PAINT MANUFACTURER, THE BLACK BORDER AND FULL COAT OF REFLECTIVE PAINT IS TO BE APPLIED

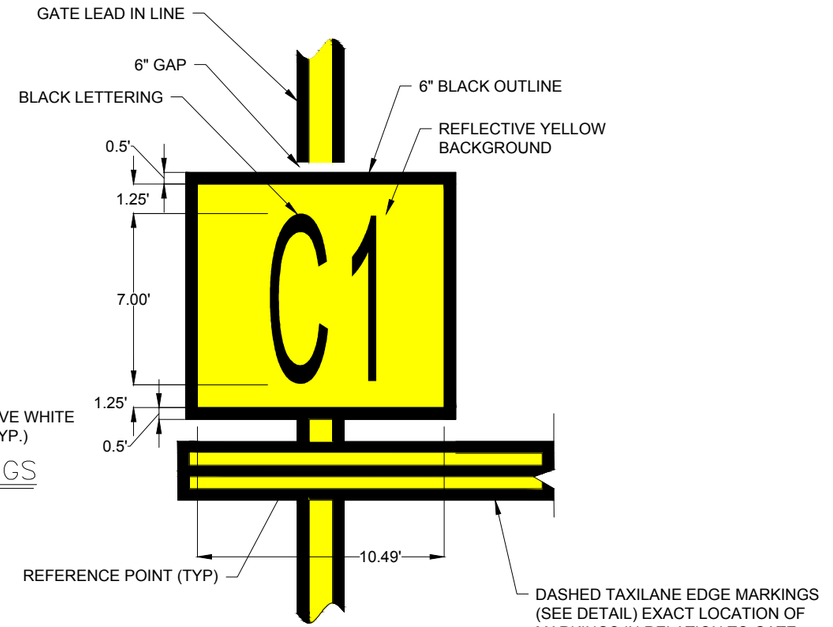

TYPICAL GATE IDENTIFICATION MARKINGS

N.T.S.

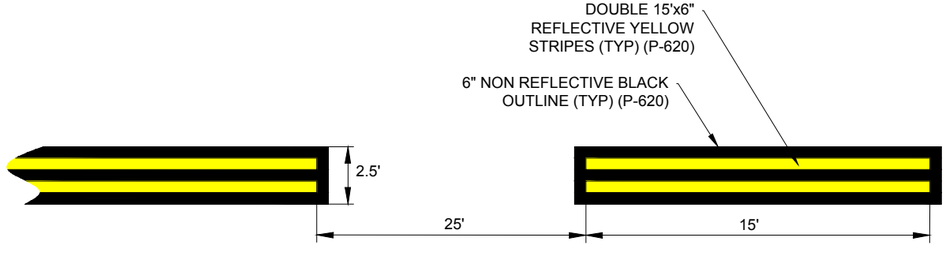

TAXIWAY/TAXILANE DASHED EDGE MARKINGS

NTS

NOTE:
THE OUTERMOST EDGE OF THE YELLOW STRIPE IS TO BE AT THE TAXIWAY/TAXILANE EDGE LINE

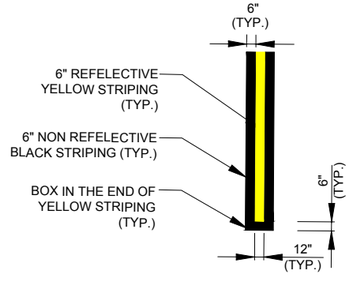

TAXIWAY CENTERLINE STRIPING DETAIL

N.T.S

FLY VPS

DESTIN - FORT WALTON BEACH AIRPORT

OKALOOSA COUNTY

INFRASTRUCTURE CONSULTING & ENGINEERING
5550 WEST IDLEWILD AVE. SUITE 102
TAMPA, FLORIDA 33634 (813) 330-2701
CERTIFICATE OF AUTHORIZATION NO.: 30862

Project Name:
CONSTRUCT WEST APRON EXPANSION AND INFRASTRUCTURE AT VPS

Designer:	Checked by:
HJ	JNG
Technician:	ICE Proj. No.:
MA	18-46

Engineer of Record:

Notes:

REVISIONS

No.	Description	Date	By

Drawing Name:
APRON MARKING DETAILS

FAA A.I.P. Project No.:
3-12-0081-029-2018

ST Project No.:

Date:	Sheet Number:
MAY 2019	C7.6

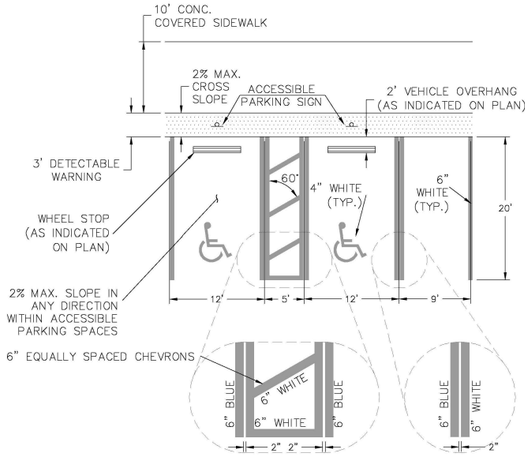

ACCESSIBLE STRIPING

N.T.S

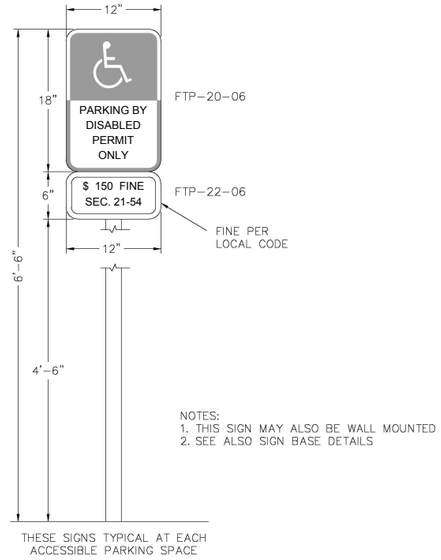

ACCESSIBLE PARKING SIGN

N.T.S

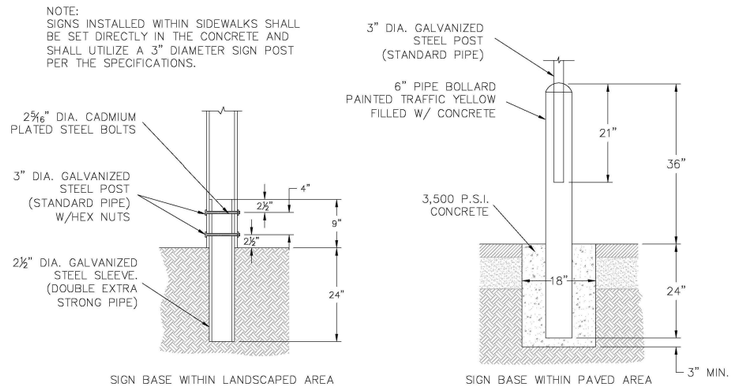

SIGN BASE

N.T.S

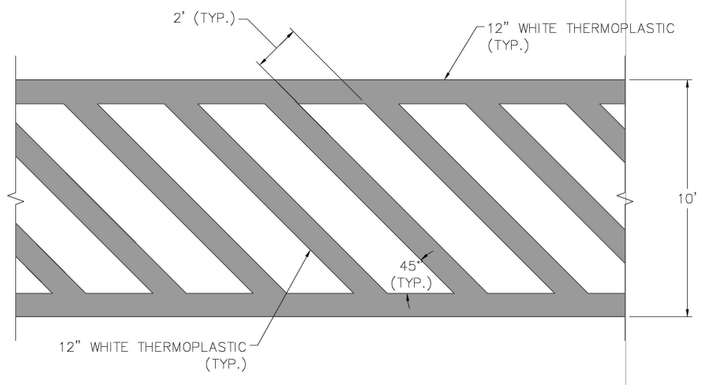

CROSSWALK MARKING DETAIL

N.T.S

SIGN SUMMARY

SIGN STYLE	MUTCD	LEGEND	DIMENSIONS	SIGN TOTALS
S1	R1-1	STOP	30" x 30"	5
S2	CUSTOM	SHUTTLE STOP	24" x 18"	4
S3	CUSTOM	ROW A	18" x 24"	28

FLY VPS
DESTIN - FORT WALTON BEACH AIRPORT
OKALOOSA COUNTY
INFRASTRUCTURE CONSULTING & ENGINEERING
5550 WEST IDLEWILD AVE. SUITE 102
TAMPA, FLORIDA 33634 (813) 330-2701
CERTIFICATE OF AUTHORIZATION NO.: 30862

Project Name:
CONSTRUCT WEST APRON EXPANSION AND INFRASTRUCTURE AT VPS

Designer:	Checked by:
HJ	JNG
Technician:	ICE Proj. No.:
MA	18-46

Engineer of Record:

Notes:

REVISIONS

No.	Description	Date	By

Drawing Name:
PARKING LOT MARKING AND SIGNING DETAILS

FAA A.I.P. Project No.:
3-12-0081-029-2018

FDOT Project No.:

Date: MAY 2019

Sheet Number: C7.7

File Path: Y:\Okaloosa County\VPS (Destin-FWB Airport)\18-46 VPS West Apron\CADD-dwg\020-C7.7 PARKING LOT MARKING AND SIGNING DETAILS.dwg Date: 5/17/2019 9:39 AM

EXIST. DIRECTIONAL ARROW (TO BE REMOVED TYP.)

CONNECT TO EXIST. 6" DIP WATER LINE WITH 6"-22.5°BEND

EXIST. 6" DIP WATER LINE

45° AND 22.5° BEND

90° BEND

12"X6" TEE

WATER LINE TO PASS UNDER STORM DRAIN LINE WITH 12" MIN. VERTICAL CLEARANCE USING 1-20' JOINT OF DIP CENTERED UNDER THE 18" RCP

CONSTRUCT 6" PVC WATER LINE

GATE VALVE

EXIST. SANITARY M.H.
TOP ELEVATION = 85.40'
8" PVC INV(S)=72.45'
8" PVC INV(N)=72.37'
(TO BE REMOVED)

EXIST. CONC. SLABS

CONNECT TO EXIST. 12" DIP WATER LINE
BEGIN 12" WATER LINE PROFILE (SHEET C8.3)

EXIST. 6" DIP WATER LINE (TO BE REMOVED)

EXIST. 12" DIP WATER LINE (TO BE REMOVED)

CONSTRUCT AIRCRAFT RATED SANITARY SEWER MANHOLE ON EXIST. 8" PVC
RIM EL. = 84.59
STA. 17+45.73, 144.92' (LT)
INV. (EXIST. 8" PVC) = 72.5 ± (CONTRACTOR TO FIELD VERIFY)
INV. (NEW 8" PVC) = 72.30

CONSTRUCT 61 L.F. OF 8" PVC GRAVITY SEWER PIPE AT 0.75%

EXIST. LIFT STATION (TO BE REMOVED)

EXIST. SANITARY MH
TOP ELEVATION = 84.84
8" PVC INV(W)=72.18'
8" PVC INV(E)=72.13'
(TO BE REMOVED)

CONSTRUCT 315 L.F. OF 8" PVC GRAVITY SEWER PIPE AT 0.75%

EXIST. 6" PVC FORCE MAIN (TO BE REMOVED)

EXIST. 2" FORCE MAIN (TO BE REMOVED)

EXIST. DUMP STATION INLET DRAIN (TO BE REMOVED)

CONSTRUCT NEW DUMP STATION ON EAST SIDE OF TERMINAL PRIOR TO TAKING EXIST. DUMP STATION OUT OF SERVICE. SEE SHEET C8.3

EXIST. LIFT STATION (TO BE REMOVED)

CONSTRUCT AIRCRAFT RATED SANITARY SEWER MANHOLE ON EXIST. 8" PVC
RIM EL. = 84.30
STA. 17+12.47, OFFSET 94.44' (LT)
INV. (EXIST. 8" PVC) = 72.5 ± (CONTRACTOR TO FIELD VERIFY)
INV. (NW) = 71.84
INV. (S) = 71.74

INV. = 75.90 (PER RECORD DRAWINGS)

NOTES:
1. THE EXISTING SEWER SYSTEM MUST REMAIN IN SERVICE UNTIL THE NEW SYSTEM HAS BEEN CONSTRUCTED AND CONNECTED TO THE EXISTING.
2. CONNECTION OF NEW WATER LINES TO EXISTING MUST BE MADE BETWEEN 12:00 AM AND 5:00 AM.
3. MINIMUM COVER OVER TOP OF WATER LINES SHALL BE 36".

INSTALL FIRE HYDRANT ASSEMBLY

22.5° BEND

CONSTRUCT 12" PVC WATER LINE

INSTALL FIRE HYDRANT ASSEMBLY

CONSTRUCT 6" PVC WATER LINE

SANITARY MH W/ CONCRETE COLLAR
TE:88.22
IE:(E)76.49
IE:(W)76.43

EXISTING TERMINAL BUILDING 11.5'x14.3' OPEN COVERED BENCH

6' CHAINLINK FENCE WITH BARBWIRE

EXIST. 1 STORY MASONARY

EXIST. COVERED CONCRETE

EXIST. BOLLARDS TYP.

EXIST. CANOPY COLUMNS

CONCRETE

EOP CONC.

8"SAN

EXISTING DIRT RD

6" PVC FORCE MAIN

2" PE FORCE MAIN

109+35
109+00
108+00
107+00
106+00
105+00

0 15 30 60

MATCH LINE SHEET C8.2

DESTIN - FORT WALTON BEACH AIRPORT

OKALOOSA COUNTY

INFRASTRUCTURE CONSULTING & ENGINEERING
5550 WEST IDLEWILD AVE. SUITE 102
TAMPA, FLORIDA 33634 (813) 330-2701
CERTIFICATE OF AUTHORIZATION NO.: 30862

Project Name:
CONSTRUCT WEST APRON EXPANSION AND INFRASTRUCTURE AT VPS

Designer:	Checked by:
HJ	JNG
Technician:	ICE Proj. No.:
MA	18-46

Engineer of Record:

Notes:
1. SEE SHEET C4.1 FOR LEGEND.

REVISIONS

No.	Description	Date	By

Drawing Name:
WATER AND SANITARY SEWER PLAN NO.1

FAA A.I.P. Project No.:
3-12-0081-029-2018

FDOT Project No.:

Date: MAY 2019

Sheet Number: C8.1

File Path: Y:\Okaloosa County\VPS (Destin-FWB Airport)\18-46 VPS West Apron\CADD-dwg\021-C8.1-8.5-WATER AND SANITARY SEWER PLANS.dwg Date: 5/16/2019 5:05 PM

MATCH LINE SHEET C8.1

0 15 30 60

CONSTRUCT AIRCRAFT RATED SANITARY SEWER MANHOLE
STA. 103+81.22, OFFSET 94.56' (LT)
RIM EL. = 82.11
INV (N) = 69.38
INV (S) = 69.28

CONSTRUCT 315 L.F. OF 8" PVC GRAVITY SEWER PIPE AT 0.75%

CONSTRUCT 12" PVC WATER LINE

PROVIDE 8" PVC STUB OUT AND CAP

CONSTRUCT STANDARD SANITARY SEWER MANHOLE
STA. 102+21.10, 382.43' (LT)
RIM EL. = 83.36
INV. = 78.00

CONSTRUCT 110 L.F. OF 8" PVC GRAVITY SEWER @1.24%

INSTALL FIRE HYDRANT ASSEMBLY

INSTALL FIRE HYDRANT ASSEMBLY

CONSTRUCT STANDARD SANITARY SEWER MANHOLE
STA. 102+06.56, 336.82' (LT)
RIM EL. = 84.12
INV. (E) = 76.54
INV. (NW) = 76.64

CONSTRUCT 12" GATE VALVE

WATER LINE TO PASS UNDER STORM DRAIN PIPE WITH 12" MIN. VERTICAL CLEARANCE

NEW OCWS 20" FLUSHING PAD (BY OCWS)

NEW DUMP STATION INLET DRAIN

EXIST. 6" PVC FORCE MAIN (TO BE REMOVED)

EXIST. 2" FORCE MAIN (TO BE REMOVED)

EXIST. OCWS 20" FLUSHING PAD (TO BE REMOVED)

EXIST. 6" CONC. BOX
TOP EL.=84.8
BOT EL.= 82.4
(TO BE REMOVED)

EXIST. 18" STAND PIPE
(TO BE REMOVED)

EXIST. 2" FORCE MAIN

EXISTING DIRT RD

12" RUBBLE RIP-RAP UNDERLAIN WITH FILTER FABRIC (FDOT STD. SPECS 530)

20" DIP WATER PIPE (BY OCWS)

OCWS 20" WATER MAIN

CONNECT TO EXIST. 20" DIP WITH 20"x20" TAPPING VALVE AND SLEEVE

1" HDPE TUBING TO DUMP STATION NO. 1 (SEE SHEET C8.4)

EXIST. BFP

EXIST. METER VAULT

EXIST. BFP

TAPPING SADDLE AND CORPORATION STOP

EXIST. 20" DIP (TO BE REMOVED)

CUT AND CAPPED BY OCWS. CONTRACTOR SHALL COORDINATE WITH OCWS 10 BUSINESS DAYS BEFORE REMOVAL IS TO COMMENCE

AIRPORT LEASE LINE

SEE INSERT 'A' FOR ENLARGED VIEW

CONSTRUCT 214 LF OF 8" PVC GRAVITY SEWER @ 4.20%

CONSTRUCT STANDARD SANITARY SEWER MANHOLE
STA. 101+74.00, OFFSET 161.86' (LT)
RIM EL. = 81.30
INV (N) = 66.92
INV (W) = 66.92
INV (S) = 66.82
INV (E) = 68.82 (2" FM)

CONSTRUCT 24 L.F.OF 8" PVC GRAVITY SEWER @ 0.75%

CONNECT TO EXIST. 2" FORCE MAIN

CONNECT 8" GRAVITY SEWER TO EXIST. WET WELL
INV= 66.62

CONSTRUCT 82 L.F. OF 2" PVC FORCE MAIN

STA:101+69.40
OFF:178.00'L
N:548823.77
E:1322543.53

CONSTRUCT SANITARY SEWER LIFT STATION

CONNECT 6" PVC FORCE MAIN TO LIFT STATION

INSTALL 10' DUAL SWING GATE

CONNECT 12" PVC TO EXIST. 12" DIP WATER LINE. END 12" WATER LINE PROFILE.

CONSTRUCT 125 L.F. OF 6" PVC FORCE MAIN

N:548880.70
E:1322824.86

CONNECT TO EXIST. 12" DIP WATER LINEWITH 12"X12" TEE

CONSTRUCT 12" GATE VALVES

WATER VAULT

BFP

BFP

6" FORCEMAIN

FORCE MAIN TO PASS UNDER WATER LINE WITH 12" MINIMUM VERTICAL CLEARANCE

CONNECT TO EXIST. 6" FORCE MAIN

INSERT 'A'

0 5 10 20

EXIST. 6' CHAINLINK FENCE WITH BARBWIRE

DENSE VEGETATION

NOTES:
1. THE EXISTING SEWER SYSTEM MUST REMAIN IN SERVICE UNTIL THE NEW SYSTEM HAS BEEN CONSTRUCTED AND CONNECTED TO THE EXISTING.
2. CONNECTION OF NEW WATER LINES TO EXISTING MUST BE MADE BETWEEN 12:00 AM AND 5:00 AM.
3. MINIMUM COVER OVER TOP OF WATER LINES SHALL BE 36".

File Path: Y:\Okaloosa County\VPS (Destin-FWB Airport)\18-46 VPS West Apron\CADD-dwg\021-C8.1-8.5-WATER AND SANITARY SEWER PLANS.dwg Date: 5/17/2019 4:21 PM

FLY VPS
DESTIN - FORT WALTON BEACH AIRPORT

OKALOOSA COUNTY

INFRASTRUCTURE CONSULTING & ENGINEERING
5550 WEST IDLEWILD AVE. SUITE 102
TAMPA, FLORIDA 33634 (813) 330-2701
CERTIFICATE OF AUTHORIZATION NO.: 30862

Project Name:
CONSTRUCT WEST APRON EXPANSION AND INFRASTRUCTURE AT VPS

Designer:	Checked by:
HJ	JNG
Technician:	ICE Proj. No.:
MA	18-46

Engineer of Record:

Notes:
1. SEE SHEET C4.1 FOR LEGEND.

REVISIONS

No.	Description	Date	By

Drawing Name:
WATER AND SANITARY SEWER PLAN NO. 2

FAA A.I.P. Project No.:
3-12-0081-029-2018

FDOT Project No.:

Date: MAY 2019

Sheet Number: C8.2

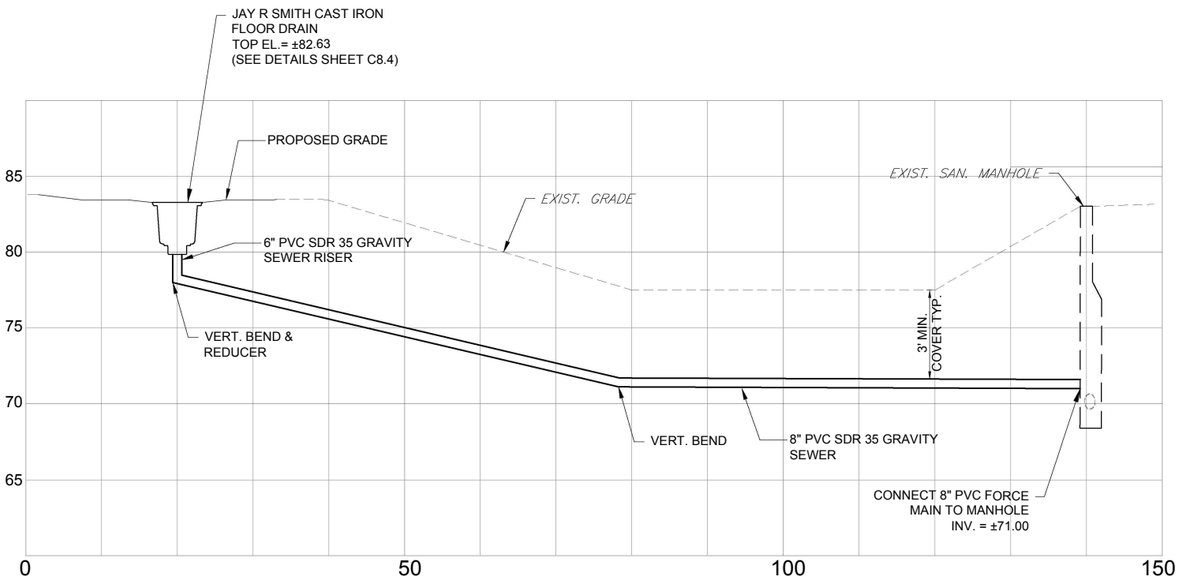

8" GRAVITY SEWER PROFILE (LOCATION #2)

N.T.S.

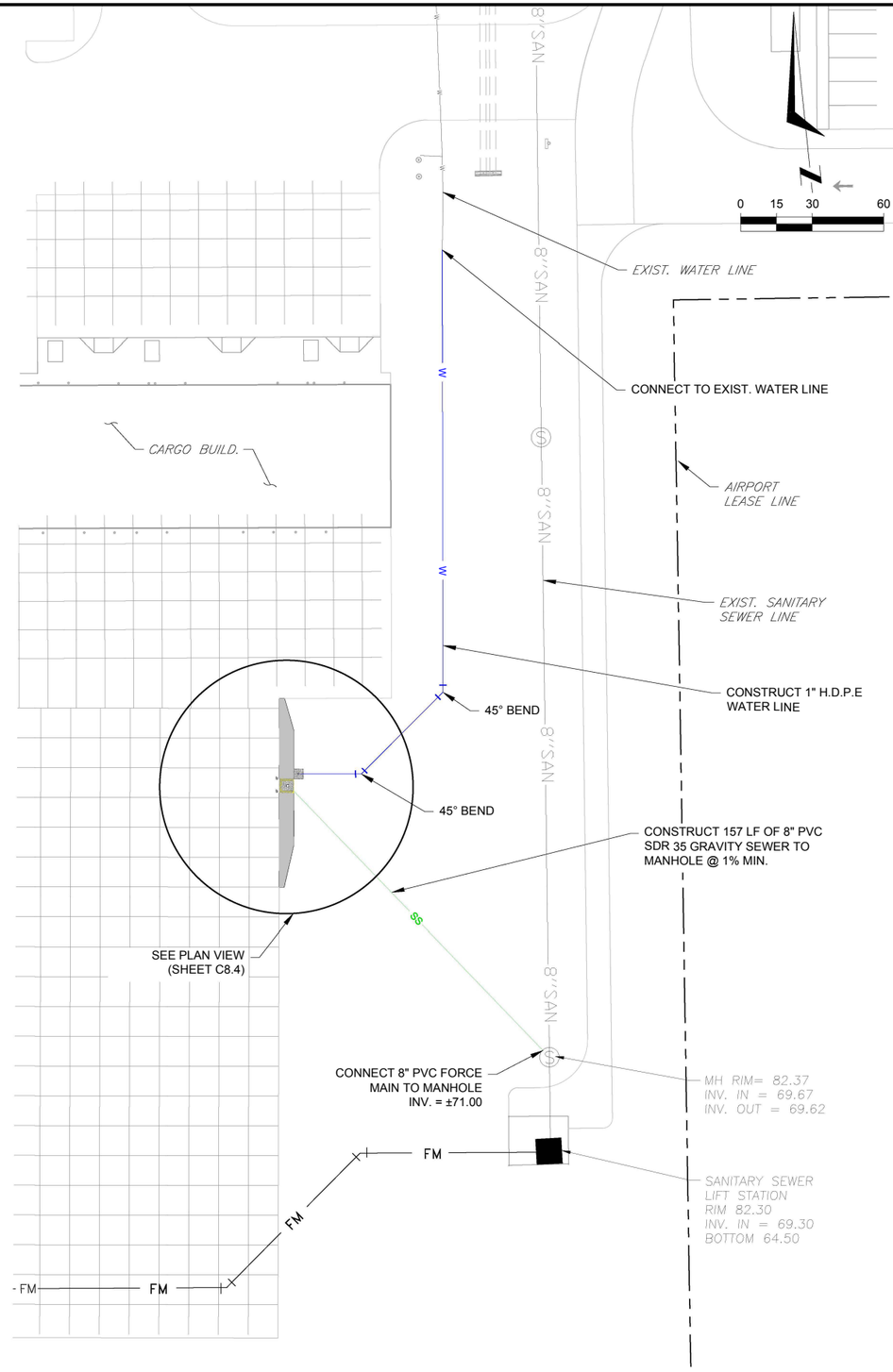

DUMP STATION (LOCATION #2)

N.T.S.

Dat - 5/17/2019 -

DESTIN - FORT WALTON BEACH AIRPORT

OKALOOSA COUNTY

INFRASTRUCTURE
CONSULTING & ENGINEERING
5550 WEST IDLEWILD AVE. SUITE 102
TAMPA, FLORIDA 33634 (813) 330-2701
CERTIFICATE OF AUTHORIZATION NO.: 30862

Project Name:
CONSTRUCT WEST APRON EXPANSION AND INFRASTRUCTURE AT VPS

Designer:	Checked by:
HJ	JNG
Technician:	ICE Proj. No.:
MA	18-46

Engineer of Record:

Notes:

1. SEE SHEET C4.1 FOR LEGEND.

REVISIONS

No.	Description	Date	By

Drawing Name:
WATER AND SANITARY SEWER PLAN NO. 3

FAA A.I.P. Project No.:
3-12-0081-029-2018

FDOT Project No.:

Date:	Sheet Number:
MAY 2019	C8.3

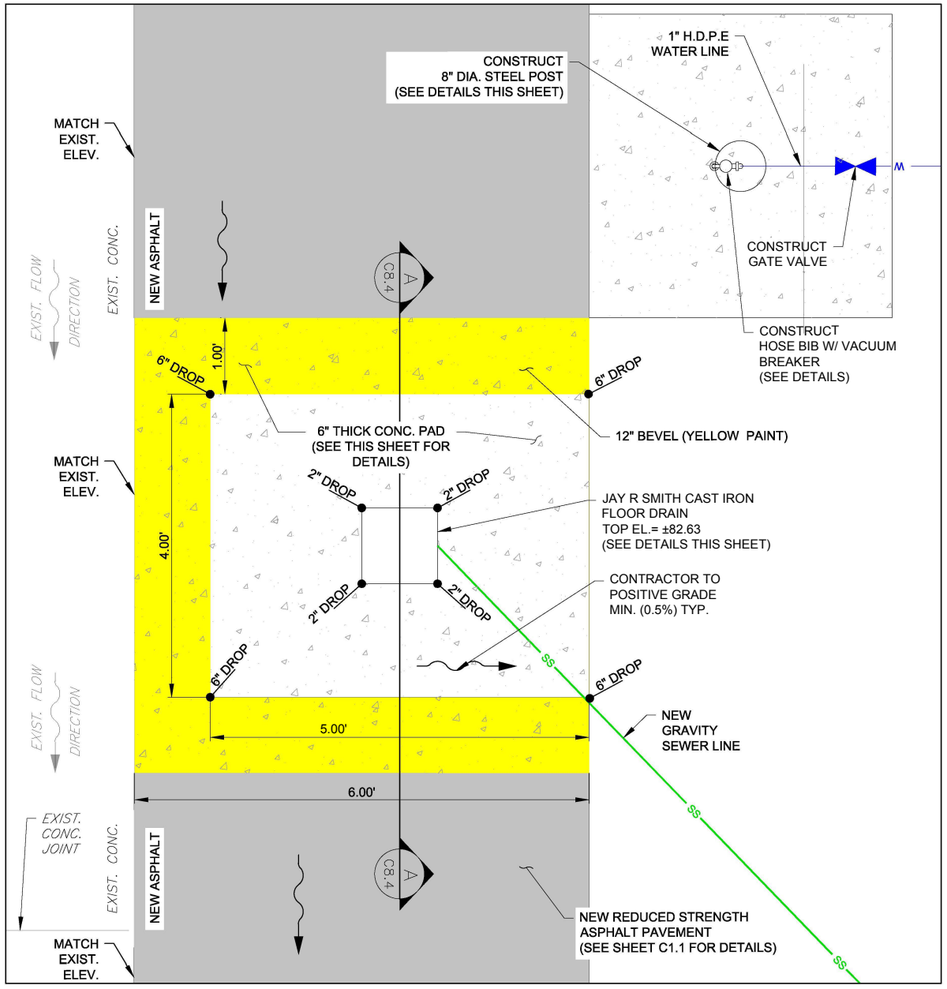

DUMP STATION PLAN VIEW (LOCATION #2)

N.T.S.

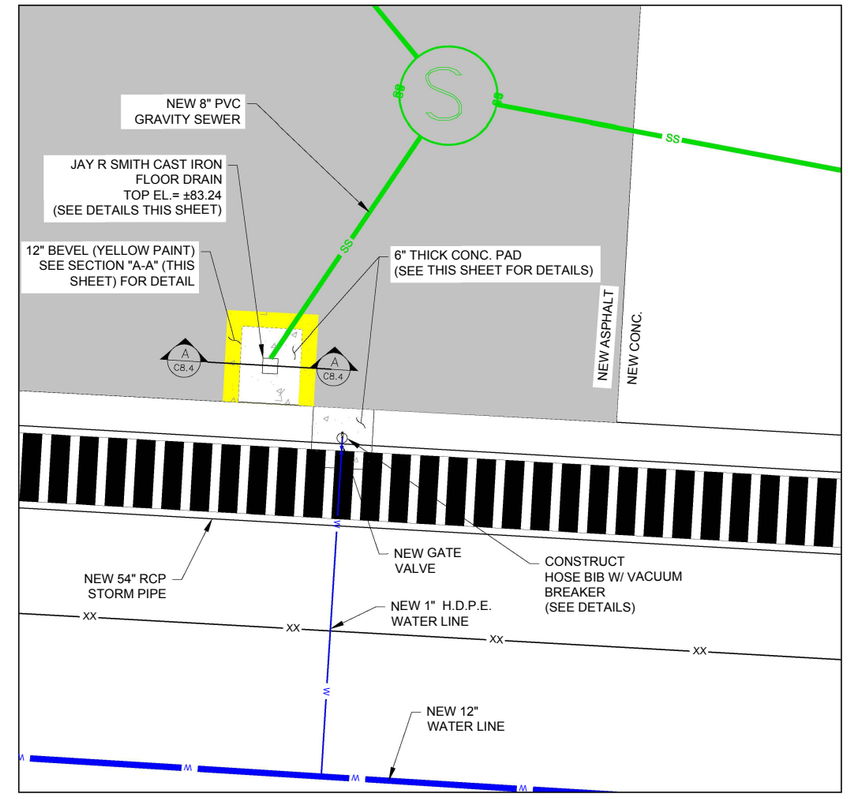

DUMP STATION PLAN VIEW (LOCATION #1)

N.T.S.

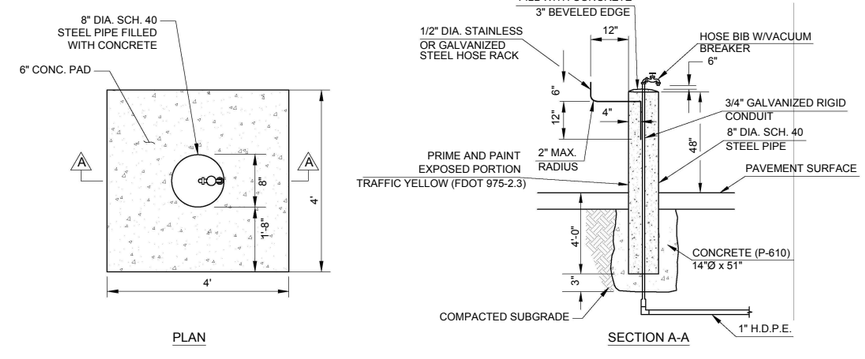

HOSE BIB DETAIL

N.T.S.

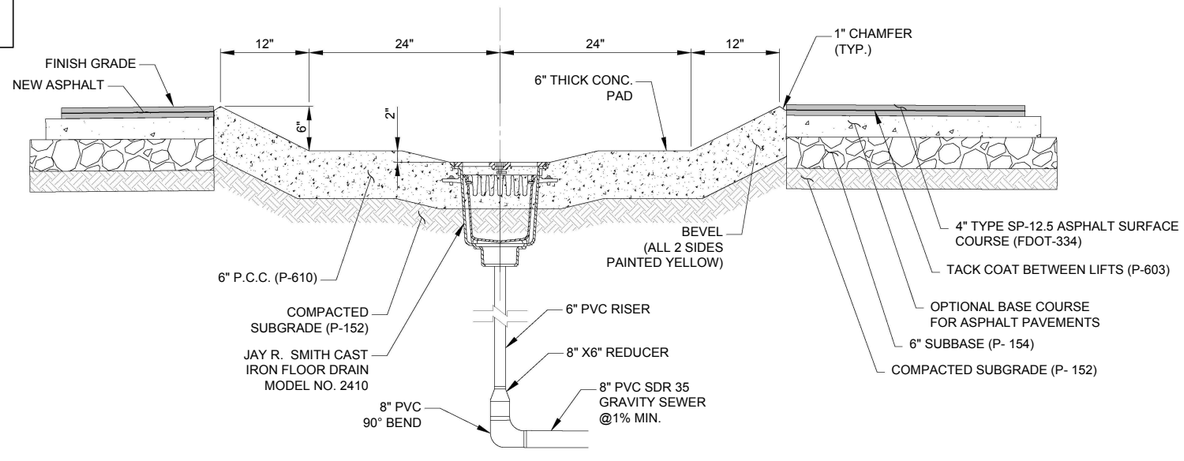

SECTION "A-A" DUMP STATION INLET DRAIN ELEVATION VIEW

N.T.S.

File Path: Y:\Okaloosa County\VPS (Destin-FWB Airport)\18-46 VPS West Apron\CADD-dwg\021-C8.1-8.5-WATER AND SANITARY SEWER PLANS.dwg Date: 5/17/2019 9:46 AM

DESTIN - FORT WALTON BEACH AIRPORT

OKALOOSA COUNTY

INFRASTRUCTURE CONSULTING & ENGINEERING
5550 WEST IDLEWILD AVE. SUITE 102
TAMPA, FLORIDA 33634 (813) 330-2701
CERTIFICATE OF AUTHORIZATION NO.: 30862

Project Name:
CONSTRUCT WEST APRON EXPANSION AND INFRASTRUCTURE AT VPS

Designer:	Checked by:
HJ	JNG
Technician:	ICE Proj. No.:
MA	18-46

Engineer of Record:

Notes:

REVISIONS

No.	Description	Date	By

Drawing Name:
WATER AND SANITARY SEWER PLAN NO. 4

FAA A.I.P. Project No.:
3-12-0081-029-2018

FDOT Project No.:

Date:	Sheet Number:
MAY 2019	C8.4

OCWS WATER & SEWER NOTES:

1. A MANDATORY PRECONSTRUCTION MEETING SHALL BE HELD, AT THE OCWS ENGINEERING DEPT, WITH ALL INVOLVED PARTIES, INCLUDING THE DEVELOPER, ENGINEER-OF-RECORD, AND CONTRACTOR, A MINIMUM OF TWO (2) WEEKS PRIOR TO CONSTRUCTION, IN ORDER TO ADDRESS CONSTRUCTION AND INSPECTION REQUIREMENTS. FAILURE TO HOLD A PRECONSTRUCTION MEETING COULD RESULT IN EXPENSIVE REWORK OF ITEMS NOT ACCEPTABLE BY OCWS STANDARDS.

2. COORDINATE WITH LOCAL FIRE DEPARTMENT ON INSPECTION REQUIREMENTS AND TESTING.

3. COORDINATE ALL UTILITY TIE-INS WITH OCWS MAINTENANCE (850) 609-7034 A MINIMUM OF FIFTEEN (15) WORKING DAYS PRIOR TO CONSTRUCTION. OCWS WILL PERFORM AND/OR OVERSEE ALL CONNECTIONS TO EXISTING WATER OR SEWER MAINS.

4. ALL UTILITY CONSTRUCTION SHALL BE INSPECTED BY THE OCWS ENGINEERING DEPARTMENT (850) 609-6161, INCLUDING, BUT NOT LIMITED TO PRESSURE TESTING, FINISHED GRADE DEPTH, AND SERVICE LOCATIONS. AS A MINIMUM, A MANDATORY FORTY-EIGHT (48) HOUR NOTICE IS REQUIRED FOR ALL INSPECTIONS.

5. PRIOR TO OCWS SIGNING FDEP CLEARANCE APPLICATIONS (INVOLVING NEW MAINS), THE FOLLOWING ITEMS ARE REQUIRED:
   a. PASSING PRESSURE TESTS
   b. PASSING BACTERIOLOGICAL TESTS
   c. SATISFACTORY INSPECTION
   d. COMPLETE, ACCURATE AS-BUILTS RECEIVED
6. PRIOR TO OCWS ACCEPTANCE OF INFRASTRUCTURE AND THE SETTING OF WATER METERS, THE FOLLOWING ITEMS ARE REQUIRED:
   a. FDEP CLEARANCE
   b. PASSING FINAL INSPECTION, AT ESTABLISHED FINISHED GRADE
   c. ASSOCIATED RIGHT-OF-WAY AND/OR EASEMENTS EXECUTED AND RECORDED
   d. WATER & SEWER CONSTRUCTION COST
   e. 12-MONTH WARRANTY AGREEMENT, TO COVER ANY DAMAGES TO OCWS' MAINTAINED UTILITIES, WHICH MAY BE CAUSED BY THE INSTALLATION OF OTHER UTILITIES OR INFRASTRUCTURE. THE WARRANTY REQUIRES THE DEVELOPER AND CONTRACTOR TO MAKE ALL REPAIRS OR PAY ASSOCIATED COST REQUIRED TO CORRECT DAMAGE(S).

7. CAPACITY EXPANSION CHARGES SHALL BE PAID IN FULL PRIOR TO THE ISSUANCE OF A BUILDING PERMIT. COORDINATE CAPACITY EXPANSION CHARGES, ACCOUNT SETUP, AND HYDRANT METERS WITH THE OCWS TAPS OFFICE AT (850) 609-6182.

8. A MINIMUM 15'-0" CLEARANCE SHALL BE MAINTAINED BETWEEN UTILITY MAINS AND PROPOSED BUILDINGS. THE CONTRACTOR SHALL PROVIDE PROPER SEPARATION FROM PROPOSED DRAINAGE SYSTEMS AND UTILITY PIPES, INCLUDING SERVICES.

9. NO UTILITY CONNECTIONS WILL BE MADE INTO COUNTY/FDOT RIGHT-OF-WAY AND/OR EASEMENTS WITHOUT AN APPROVED UTILITY PERMIT. ALL CROSSINGS UNDER EXISTING ROADS WILL BE BORED, UNLESS PERMITTED OTHERWISE. THE CONTRACTOR MUST REPAIR ANY PAVEMENT CUTS WITHIN TIME SPECIFIED ON PERMIT AND COORDINATE ALL CUTS WITH GOVERNING AUTHORITY A MINIMUM 15 DAYS PRIOR TO WORK BEING DONE.

10. THE CONTRACTOR WILL BE RESPONSIBLE FOR EXTENDING THE PROPOSED WATER AND SEWER MAINS FROM THE UTILITY MAIN CONNECTIONS PROVIDED BY OCWS INTO THE DEVELOPMENT.

11. ALL WATER UTILITIES SHALL BE CONSTRUCTED IN ACCORDANCE WITH OCWS REQUIREMENTS AND SPECIFICATIONS. ALL WATER MAIN PIPING SHALL BE C-900 DR 18 OR LESS, WITH 2 EXCEPTIONS: DUCTILE IRON PIPE IS REQUIRED FROM TEES TO HYDRANTS, OR AS OTHERWISE SPECIFIED BY OCWS. HYDRANTS SHALL BE MUELLER SUPER CENTURION A423 OR AMERICAN DARLING B84B.

12. A MINIMUM 36" (AND A MAXIMUM 42" FOR WATER) COVER IS REQUIRED FROM TOP OF ALL PROPOSED UTILITY LINES AND SERVICES FROM FINISHED GRADES, INCLUDING SWALES AND BASINS.

13. ALL LOT CORNERS, RIGHTS-OF-WAY, AND REAR EASEMENT LINES SHALL BE LOCATED AND PROPERLY MARKED, PRIOR TO THE CONTRACTOR INSTALLING MAINS AND SERVICES, THEN AGAIN PRIOR TO FINAL INSPECTION. OCWS ENGINEERING WILL REQUIRE EXACT VERIFICATION OF EACH SERVICE PLACEMENT, BEFORE FINAL ACCEPTANCE IS MADE.

14. A MINIMUM HORIZONTAL CLEARANCE OF 36" IS REQUIRED FROM POWER TRANSFORMER/BOX PERIMETER TO ANY UTILITY MAINS AND SERVICES.

15. CLEANOUTS ARE REQUIRED ON ALL SEWER SERVICES AND SHOULD BE LOCATED AT THE BACK OF THE RIGHT-OF-WAY OR EASEMENT LINE. THE TOP OF THE CLEANOUT SHALL BE 6-12" BELOW GRADE AND INSIDE A PLASTIC METER BOX WITH A GREEN LID. IF THE CLEANOUT IS LOCATED IN PAVEMENT, IT SHALL BE TRAFFIC-RATED/BRASS, AND NO METER BOX IS REQUIRED.

File Path: Y:\Okaloosa County\VPS (Destin-FWB Airport)\18-46 VPS West Apron\CADD-dwg\021-C8.1-8.5-WATER AND SANITARY SEWER PLANS.dwg Date: 5/17/2019 9:47 AM

DESTIN - FORT WALTON BEACH AIRPORT

OKALOOSA COUNTY

INFRASTRUCTURE CONSULTING & ENGINEERING
5550 WEST IDLEWILD AVE. SUITE 102
TAMPA, FLORIDA 33634 (813) 330-2701
CERTIFICATE OF AUTHORIZATION NO.: 30862

Project Name:
CONSTRUCT WEST APRON EXPANSION AND INFRASTRUCTURE AT VPS

Designer:	Checked by:
HJ	JNG
Technician:	ICE Proj. No.:
MA	18-46

Engineer of Record:

Notes:
1. SEE SHEET C4.1 FOR LEGEND.

REVISIONS

No.	Description	Date	By

Drawing Name:
OCWS WATER AND SEWER GENERAL NOTES

FAA A.I.P. Project No.:
3-12-0081-029-2018

FDOT Project No.:

Date:	Sheet Number:
MAY 2019	C8.5

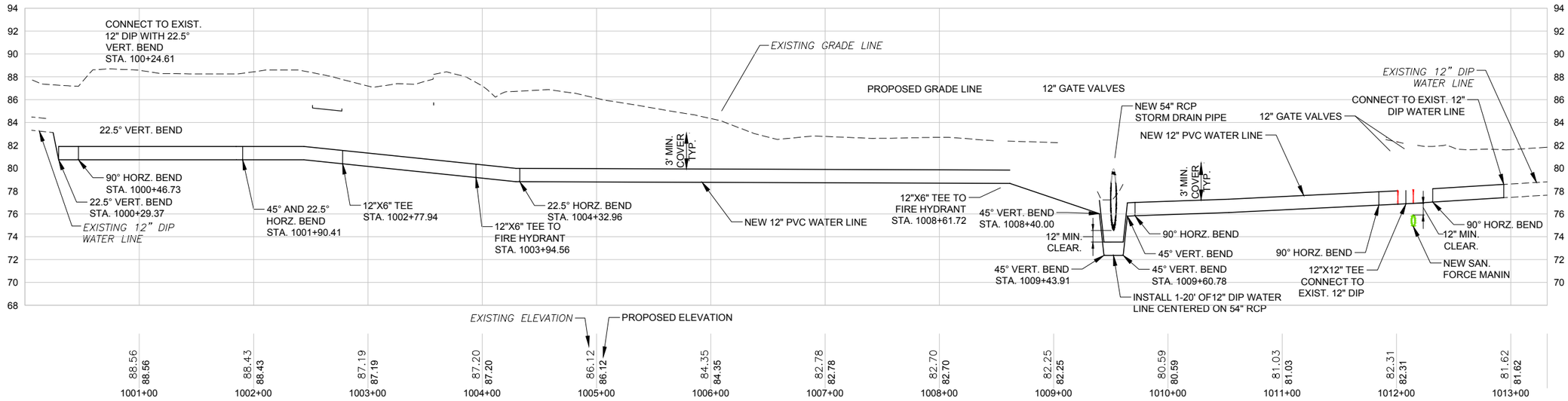

HORIZ.= 0 25 50 100

VERT.= 0 0.25 5 10

DESTIN - FORT WALTON BEACH AIRPORT

OKALOOSA COUNTY

INFRASTRUCTURE CONSULTING & ENGINEERING
5550 WEST IDLEWILD AVE. SUITE 102
TAMPA, FLORIDA 33634 (813) 330-2701
CERTIFICATE OF AUTHORIZATION NO.: 30862

Project Name:
CONSTRUCT WEST APRON EXPANSION AND INFRASTRUCTURE AT VPS

Designer:	Checked by:
HJ	JNG
Technician:	IC= Proj. No.:
MA	18-46

Engineer o- \ecord:

Notes:

REVISIONS

No.	Description	Date	By

Drawing Name:
WATER MAIN PROFILE

--A A.I.P. Projec- .:
3-12-0081-029-2018

FDOT Projec- .:

Da- :	Shee- imber:
MAY 2019	C8.6

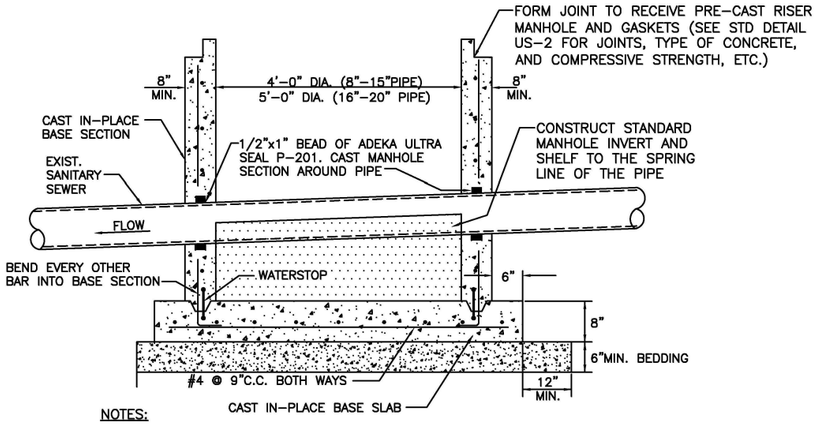

NOTES:

1. PRIOR TO ANY EXCAVATION OVER THE PIPE, A TV RECORDING OF THE EXISTING SEWER MAIN SHALL OCCUR BETWEEN THE UPSTREAM AND DOWNSTREAM MANHOLES WHILE THE COUNTY INSPECTOR IS PRESENT.
2. THE CONTRACTOR SHALL CAREFULLY EXCAVATE AROUND AND PROPERLY SUPPORT THE EXISTING PIPE.
3. PREFERRED CONSTRUCTION IS BY "CUTTING-IN" A STANDARD SANITARY SEWER MANHOLE WITH A TEMPORARY FLOW BY-PASS SYSTEM.
4. SEWER LINES GREATER THAN 20" REQUIRE SPECIAL DESIGN AND APPROVAL BY MANATEE COUNTY UTILITIES ENGINEERING.
5. ALLOW SUFFICIENT CURING TIME, 24-36 HOURS, FOR THE ADEKA ULTRA-SEAL P-201, BEFORE POURING CONCRETE.
6. FOLLOWING SATISFACTORY CURING OF THE INVERT CHANNEL AND SHELF, THE CONTRACTOR SHALL CUT AND REMOVE THE TOP HALF OF THE EXISTING PIPE WITHIN THE MANHOLE, TAKING CARE NOT TO ALLOW ANY PIECES TO BE WASHED DOWN STREAM IN THE PIPE. CUTTING OF THE PIPE SHALL BE IN A WORKMAN LIKE MANNER, PROVIDING A SMOOTH AND EVEN FINISHED PRODUCT.
7. A TV RECORDING OF THE SEWER MAIN SHALL ALSO OCCUR AFTER CONSTRUCTION WHILE THE COUNTY INSPECTOR IS PRESENT. PIPE DEFLECTION SHALL NOT DEVIATE BY MORE THAN 1 INCH FROM THE DESIGN LINE.
8. THERE SHALL BE NO VISIBLE LEAKS IN THE MANHOLE.

SANITARY SEWER MANHOLE CONSTRUCTED OVER EXISTING SEWER LINE

N.T.S.

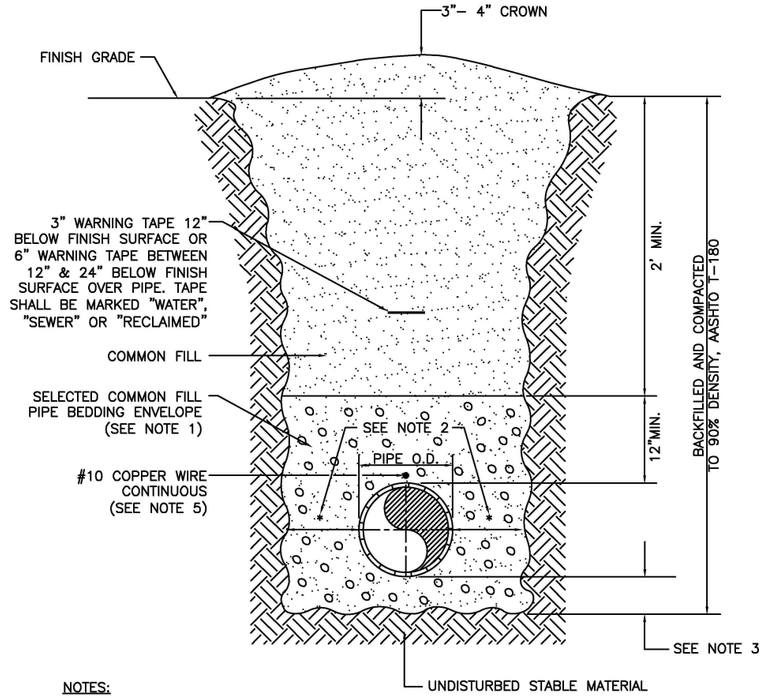

NOTES:

1. USE OF TYPE A-2 AND A-3 PIPE BEDDING TO BE DETERMINED IN THE FIELD BY THE ENGINEER.
2. PROVIDE ADEQUATE CLEARANCE TO PLACE AND COMPACT STAGE 1 BEDDING MATERIAL IN TRENCH AREA BELOW PIPE SPRINGLINE. PIPE EMBEDMENT MUST BE COMPACTED OUT TO THE TRENCH WALL OR 2.5 TIMES THE PIPE OD, WHICHEVER IS LESS.
3. TYPICALLY 4" TO 6".
4. PIPE INSTALLATION SHALL BE IN ACCORDANCE WITH THE MANUFACTURER'S WRITTEN INSTRUCTIONS.
5. TRACER WIRE NOT REQUIRED FOR GRAVITY SEWERS.

TRENCH WITH UNIMPROVED SURFACE TYPE A-1 PIPE BEDDING

N.T.S.

DESTIN - FORT WALTON BEACH AIRPORT

OKALOOSA COUNTY

INFRASTRUCTURE CONSULTING & ENGINEERING
5550 WEST IDLEWILD AVE. SUITE 102
TAMPA, FLORIDA 33634 (813) 330-2701
CERTIFICATE OF AUTHORIZATION NO.: 30862

Project Name:
CONSTRUCT WEST APRON EXPANSION AND INFRASTRUCTURE AT VPS

Designer:	Checked by:
HJ	JNG
Technician:	ICE Proj. No.:
MA	18-46

Engineer of Record:

Notes:

REVISIONS

No.	Description	Date	By

Drawing Name:
UTILITY DETAILS

FAA A.I.P. Project No.:
3-12-0081-029-2018

FDOT Project No.:

Date:	Sheet Number:
MAY 2019	C8.7

File Path: Y:\Okaloosa County\VPS (Destin-FWB Airport)\18-46 VPS West Apron\CADD-dwg\022-C8.7-C.8.9-UTILITY DETAILS.dwg Date: 5/17/2019 9:51 AM

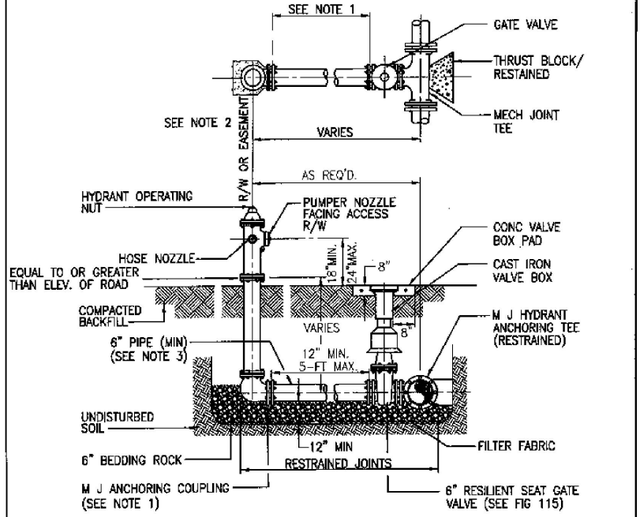

NOTES:

1. USE MECHANICAL JOINT RETAINER GLAND CLOW MODEL NO. F1058 OR APPROVED EQUAL.
2. HYDRANT SETBACK SHALL BE SET TO THE BACK OF THE EASEMENT OR RIGHT OF WAY.
3. SERVICE LINES FOR FIRE HYDRANTS TO BE SIZED TO ALLOW A MINIMUM OF 20 PSI RESIDUAL PRESSURE AT THE HYDRANT UNDER FIRE FLOW CONDITIONS.
4. TWO BLUE REFLECTIVE PAVEMENT MARKERS FOR IDENTIFICATION OF THE HYDRANT AND ITS VALVE LOCATION SHALL BE INSTALLED ON THE CENTER OF THE ADJACENT PAVED DRIVE LANE TO THE HYDRANT; MARKERS SHALL BE SPACED 1-FT APART, PERPENDICULAR TO THE ROAD CENTERLINE.
5. THE ELEVATION OF THE HYDRANT BASE SHALL BE EQUAL TO OR GREATER THAN THE ELEVATION OF THE EDGE OF PAVEMENT, BUT NOT LESS THAN 3 INCHES ABOVE THE FINISH GROUND SURFACE.

OCWS	-	FIRE HYDRANT DETAIL NOT TO SCALE	MAY 2006 200

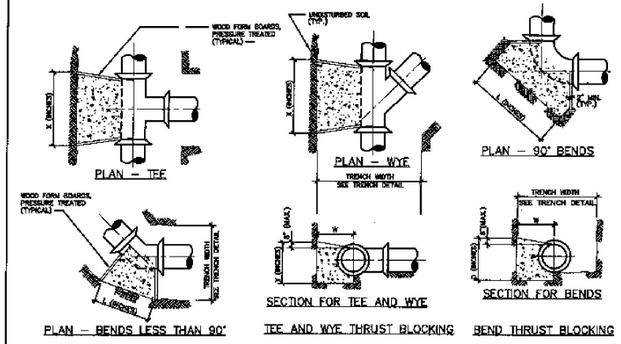

NOTES:

1. THRUST BLOCKS SHALL BE USED ONLY WHERE SHOWN ON THE DRAWINGS. THEY SHALL BE CONSTRUCTED WITH READY-MIX CONCRETE POURED BETWEEN THE FITTING AND UNDISTURBED EARTH. CAREFULLY PLACE THE CONCRETE SO THAT FITTING JOINTS ARE CLEAN AND ACCESSIBLE FOR REPAIR. WRAP ALL THRUST BLOCKS TO THE SHAPE AND DIMENSIONS SHOWN OR INDICATED BY THE ENGINEER. NO THRUST BLOCK SHALL BE POURED UNTIL THE FORMING HAS BEEN OBSERVED BY THE ENGINEER.
2. "W" SHALL BE SUFFICIENT TO PROVIDE SOLID BACKING TO UNDISTURBED EARTH.
3. VALUES IN THE TABLE ARE BASED ON 150 PSI INTERNAL PRESSURE WITH A SILT-SAND SOIL TYPE (ASTM D2487 CLASSIFICATION = GC AND SM). GC = CLAYEY GRAVELS, GRAVEL-SAND-CLAY MIXTURES. SM = SILTY SANDS, SAND-SILT MIXTURES) AND 3,000 LB. PER SQUARE FOOT BEARING PRESSURE. THRUST BLOCKS WERE COMPUTED PER DIPRA "THRUST RESTRAINT DESIGN FOR DUCTILE IRON PIPE."

THRUST BLOCK SIZE SCHEDULE

SIZE OF RUN	SIZE OF THRUST BLOCKS FOR TEE AND WYE (INCHES)			SIZE OF THRUST BLOCKS FOR BENDS AND DEAD ENDS (INCHES)								
				SIZE OF UNIT	CURVE OF 11.25°			22.5°			45°			90°			DEAD END		
					L	W	D	L	W	D	L	W	D	L	W	D	L	D
	SIZE OF BRANCH			6	12	6	12	12	22	12	26	16	22	16	22	16		
	X	Y																
6	22	16																
8	22	16																
10	22	16																
12	22	16																
14	22	16																
16	22	16																
18	22	16																
20	22	16																
24	22	16																

CONCRETE THRUST BLOCK DATA

OCWS	-	THRUST BLOCK SIZING DETAIL NOT TO SCALE	MAY 2006 130

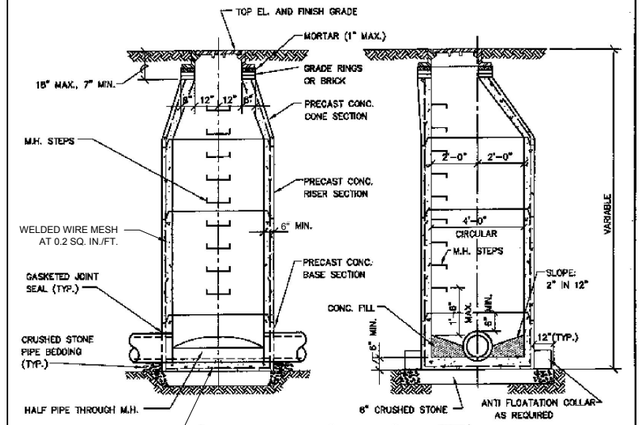

TYPICAL MANHOLE DETAIL
(PRECAST CONCRETE SECTIONS)

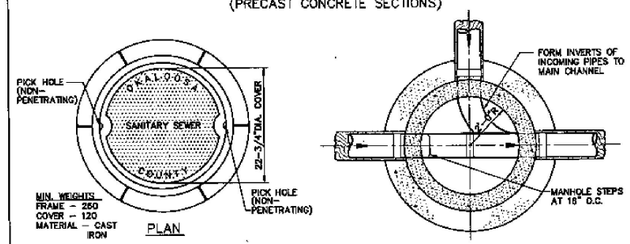

MANHOLE FRAME & COVER DETAIL

MANHOLE PLAN DETAIL

NOTE:

DETAIL SHOWN IS FOR A STANDARD MANHOLE. CONTRACTOR TO PROVIDE STRUCTURAL DESIGN FOR AIRCRAFT RATED MANHOLES. AIRCRAFT RATED MANHOLES AND COVERS TO BE RATED FOR 100,000 LB DUAL WHEEL LOAD WITH 250 PSI TIRE PRESSURE.

OCWS		PRECAST CONCRETE MANHOLE NOT TO SCALE	MAY 2006 300

REQUIRED LENGTH OF RESTRAINED JOINT PIPE FOR DIP

M-IN PIP- SIZ-	HORIZ. B-NDS			T--						\- - -\S					-
	90°	45°	22.5°	I - - TH						SI - - TII					
36	100	42	20	X36/163	X30/132	X24/96	X20/68	X16/35	X12/1	X30/57	X24/103	X20/128	X16/149		188
30	88	37	18	X30/138	X24/104	X20/78	X16/48	X12/10	X10/1	X24/57	X20/88	X16/114			162
24	75	31	15	X24/112	X20/87	X16/59	X12/25	X10/4	X8/1	X20/40	X16/74	X12/100			135
20	65	27	13	X20/93	X16/67	X12/35	X10/16	X8/1		X16/41	X12/73	X10/94			116
16	54	22	11	X16/73	X12/44	X10/27	X8/8	X6/1		X12/41	X10/68	X8/70			96
12	43	18	8	X12/53	X10/37	X8/21	X6/1			X10/37	X8/40	X6/54			75
10	37	15	7	X10/42	X8/26	X6/5				X8/21	X6/39	X4/52			63
8	30	13	6	X8/32	X6/12	X4/1				X6/22	X4/38				53
6	24	10	5	X6/19	X4/1					X4/21					41
4	17	7	3	X4/8											29

NOTES:

1. RESTRAIN 11.25° BENDS 50% OF LENGTH FOR 22.5° BENDS.
2. ALL VALVES AND FITTINGS SHALL BE RESTRAINED TO THE CONNECTING SECTIONS OF PIPE.
3. ALL ISOLATION VALVES MUST BE PROPERLY ANCHORED OR RESTRAINED TO RESIST A 180 PSI TEST PRESSURE IN EITHER DIRECTION.
4. PIPE SIZES ARE GIVEN IN INCHES.
5. RESTRAINED PIPE LENGTHS ARE GIVEN IN FEET.
6. LENGTHS SHOWN ARE FOR A TEST PRESURE OF 180 PSI.

FLY VPS

DESTIN - FORT WALTON BEACH AIRPORT

OKALOOSA COUNTY

INFRASTRUCTURE CONSULTING & ENGINEERING
5550 WEST IDLEWILD AVE. SUITE 102
TAMPA, FLORIDA 33634 (813) 330-2701
CERTIFICATE OF AUTHORIZATION NO.: 30862

Project Name:
CONSTRUCT WEST APRON EXPANSION AND INFRASTRUCTURE AT VPS

Designer:	Checked by:
HJ	JNG
Technician:	IC- Proj. No.:
MA	18-46

Engineer o- -ecord:

Notes:

REVISIONS

No.	Description	Date	By

Drawing Name:
UTILITY DETAILS

--A A.I.P. Projec- .:
3-12-0081-029-2018

- T Projec- .:

Da- :	Shee- -mber:
MAY 2019	C8.8

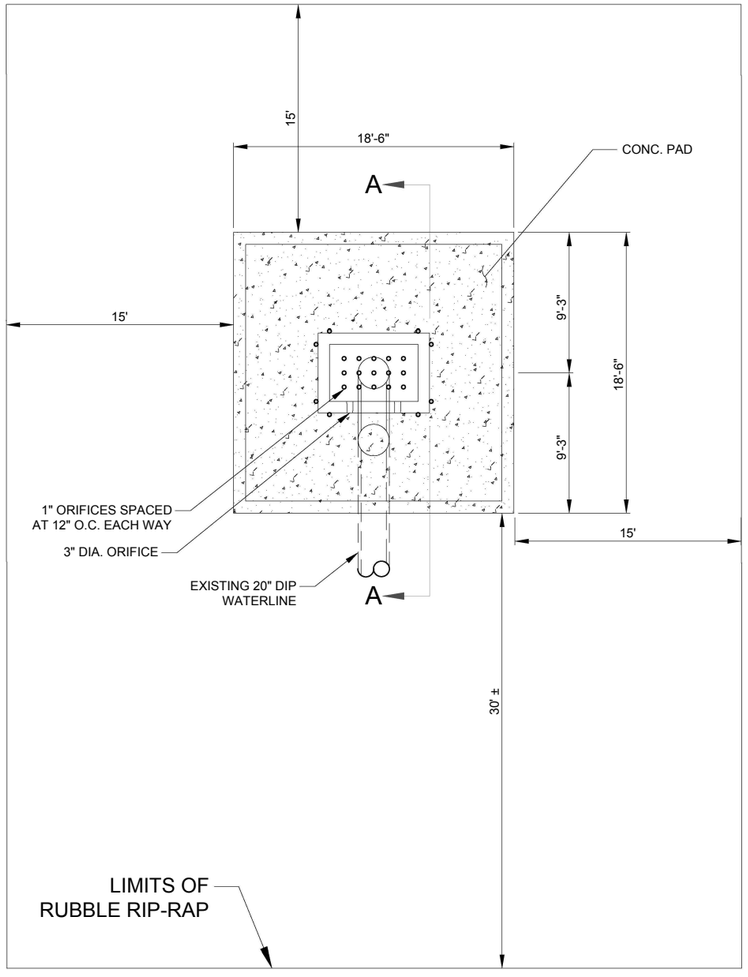

PLAN VIEW

NOTE:
PIPE AND CONCRETE PAD ARE NOT IN CONTRACT. CONTRACTOR TO INSTALL RUBBLE RIPRAP

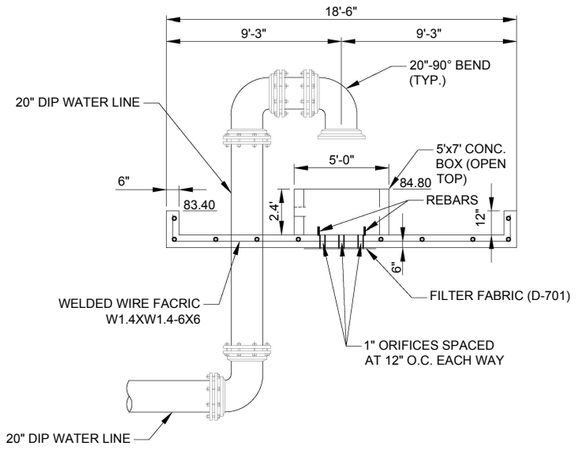

SECTION A-A

N.T.S.

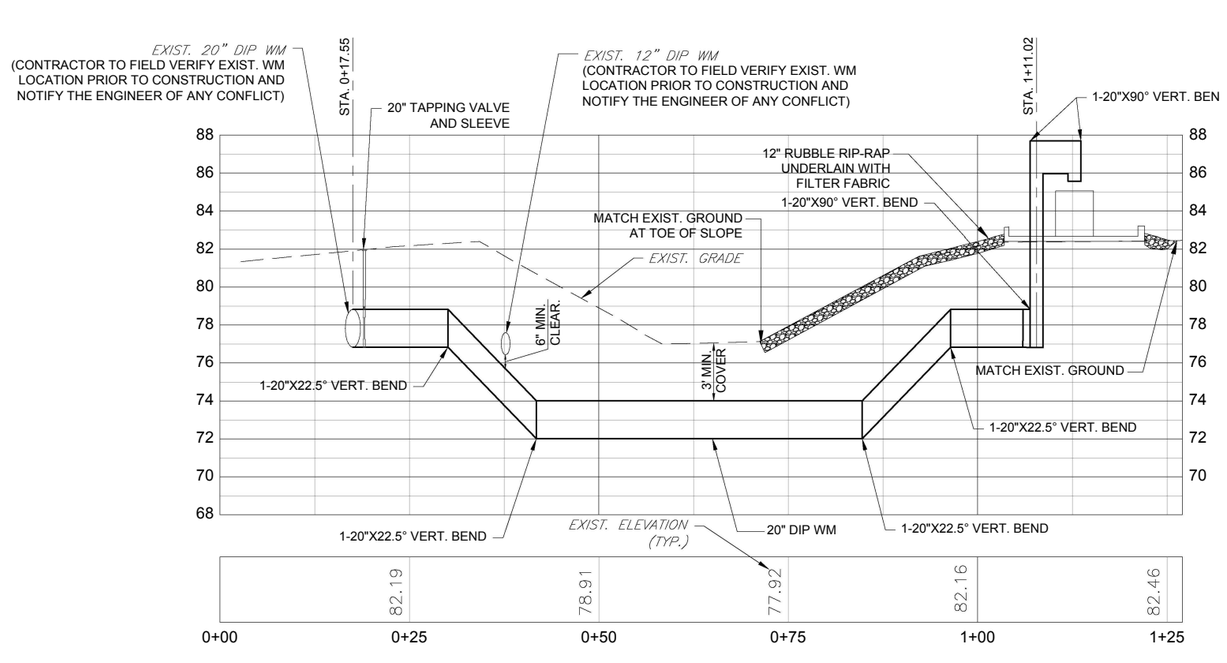

WATER FLUSHING STATION DETAIL

N.T.S.

DESTIN - FORT WALTON BEACH AIRPORT

OKALOOSA COUNTY

INFRASTRUCTURE CONSULTING & ENGINEERING
5550 WEST IDLEWILD AVE. SUITE 102
TAMPA, FLORIDA 33634 (813) 330-2701
CERTIFICATE OF AUTHORIZATION NO.: 30862

Project Name:
CONSTRUCT WEST APRON EXPANSION AND INFRASTRUCTURE AT VPS

Designer:	Checked by:
HJ	JNG
Technician:	ICE Proj. No.:
MA	18-46

Engineer of Record:

Notes:

REVISIONS

No.	Description	Date	By

Drawing Name:
UTILITY DETAILS

FAA A.I.P. Project No.:
3-12-0081-029-2018

FDOT Project No.:

Date: MAY 2019

Sheet Number: C8.9

File Path: Y:\Okaloosa County\VPS (Destin-FWB Airport)\18-46 VPS West Apron\CADD-dwg\022-C8.7-C8.8-UTILITY DETAILS.dwg Date: 5/17/2019 9:53 AM

MODEL: S4K & S4KX — Solids Handling Sewage Pump

R.P.M.	1750
MOTOR TYPE	ENCLOSED, OIL COOLED INDUCTION, VFD SUITABLE
MOTOR DESIGN NEMA TYPE	B (3ø)
GENERAL INSULATION CLASS	H
STATOR WINDING CLASS	H
MAXIMUM STATOR TEMPERATURE	356°F (180°C)
MOTOR PROTECTION	BI-METALLIC, TEMPERATURE SENSITIVE DISC, SIZED TO OPEN AT 130°C AND AUTOMATICALLY RESET @ 96–68°C DIFFERENTIAL, ONE IN SINGLE PHASE, TWO IN THREE PHASE
ELECTRICAL RATINGS	HEAT SENSOR: 24VDC 5AMPS; 115VAC 5AMPS; 230VAC 5AMPS
	SEAL FAIL: 300VAC 5mA
VOLTAGE TOLERANCE	±10%

HP	VOLTAGE	PHASE	NEC CODE	SF	FULL LOAD AMPS	SF AMPS	LOCK. RTR. AMPS	RUN KW	START KVA	RUN KVA	MTR. EFF. @ SF	MTR. EFF. 100% FL	MTR. EFF. 75% FL	MTR. EFF. 50% FL	PWR. FACT. @ SF	PWR. FACT. 100% FL	PWR. FACT. 75% FL	PWR. FACT. 50% FL
15	200	3	J	1.2	48.3	56.3	334	13.5	116	16.7	.84	.83	.80	.74	.82	.81	.78	.72
	230				46	52	290											
	460				23	26	145											
	575				16.8	19.6	116											
20	200	3	G	1.2	62.5	75	334	17.8	116	21.6	.84	.84	.83	.79	.82	.82	.81	.77
	230				54.4	65.2	290											
	460				27.2	32.6	145											
	575				21.7	26.1	116											
25	200	3	J	1.2	78.3	92.2	575	21.7	200	27.1	.87	.86	.84	.70	.81	.80	.77	.70
	230				68	80	500											
	460				34	40	250											
	575				27.2	32.1	200											
30	200	3	H	1.2	92.2	110.7	575	25.7	200	31.9	.87	.87	.86	.83	.81	.81	.79	.73
	230				80.2	96.3	500											
	460				40.1	48.1	250											
	575				32.1	38.5	200											
40	230	3	G	1.2	105	128.3	580	34.3	230	41.8	.87	.87	.87	.85	.81	.82	.82	.79
	460				52.5	64.1	290											
	575				42	51.3	232											

2 C9.0 PUMP INFORMATION
N.T.S.

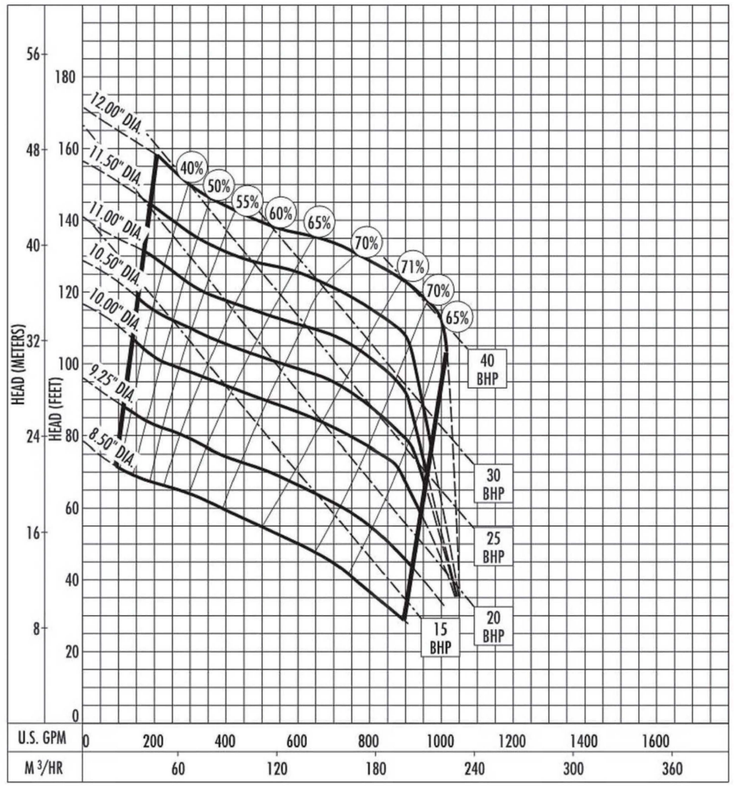

1 C9.0 25BHP HYDROMATIC PUMP CURVE
N.T.S.

GENERAL NOTES

FURNISH AND INSTALL SUBMERSIBLE PUMPS:

SEWAGE PUMP:

AIR FILLED MOTOR DESIGNED FOR SEWAGE APPLICATION WITH CLASS F INSULATION.

RATED FOR TWENTY (20) STARTS PER HOUR.

HAVE DUAL MECHANICAL SHAFT SEALS (SILICON CARBIDE ON SILICON CARBIDE) LOCATED COMPLETELY OUT OF THE PUMPAGE, IN A SEPARATE OIL FILLED CHAMBER. THE MECHANICAL SEALS ARE PROTECTED BY TWO (2) LIP SEALS, ONE ON THE LOWER WETTED END AND THE SECOND ON THE MOTOR END – TOTAL OF FOUR (4) SEAL SURFACES.

HIGH TEMPERATURE BALL BEARINGS RATED FOR A LIFE EXPECTANCY OF 50,000 HOURS (UPPER BALL BEARING – SINGLE ROW TYPE AND THE LOWER BALL BEARING – DOUBLE ROW TYPE).

THE PUMP SHALL BE DESIGNED SO THAT THE PUMP SHAFT HORSEPOWER (BHP) SHALL NOT EXCEED MOTOR RATED HORSEPOWER THROUGHOUT THE ENTIRE OPERATING RANGE OF THE PUMP PERFORMANCE CURVE.

SINGLE PHASE MOTORS SHALL BE DUAL WOUND, CAPACITOR START–RUN AND CAPABLE OF OPERATING ON 208/230 VOLT WITH A 10% TOLERANCE VOLTAGE (190 TO 260). THREE PHASE MOTORS SHALL BE DUAL WOUND AND CAPABLE OF OPERATING ON 208/230 VOLT WITH A 10% TOLERANCE VOLTAGE (190 TO 260) OR OPERATE ON 460 VOLT BY CHANGING THE MOTOR LEADS INSIDE THE PUMP.

CONCRETE WET WELL:

WET WELL CONSTRUCTION SHALL BE PRECAST MONOLITHIC WITH BASE SLAB IN ACCORDANCE WITH A.S.T.M. C–478.

WET WELL SECTIONS SHALL BE JOINED USING "RAMNECK" JOINT MATERIAL AND SHALL BE FREE FROM SEEPAGE PRIOR TO ACCEPTANCE. PROVIDE "EZ–WRAP" BUTYL ADHESIVE TAPE PER MANUFACTURER'S RECOMMENDATIONS T EACH WETWELL SECTION EXTERIOR JOINT CERCUMFERENCE

WETWELL SHALL BE FIBERGLASS LINED, AGRU SURE GRIP, OR H.D.P.E. LINED, OR OTHER MATERIA AS APPROVED (ASTM D 3753)

ALUMINUM HATCH:

FOR WET–WELL ACCESS REFER TO C9.1

(FOR 1–1/4" TO 2" DISCHARGE HEADER SYSTEM)
SHALL BE 26" X 36" X 18" WITH 17" X 30" LID. THE BOX AND LID SHALL BE FIBERGLASS COMPOSITE (H–10 TRAFFIC RATED).

(FOR 3" OR 4" DISCHARGE HEADER SYSTEM)
SHALL BE 35" X 46" X 24" WITH 30" X 48" ALUMINUM COVER, REINFORCED FOR LOAD RATING OF 150 LBS/FT WITH LOCKING DEVICE FOR HASP TYPE PADLOCK.

ACCESSORIES:

STAINLESS STEEL #304 – GUIDE RAILS, UPPER GUIDE RAIL BRACKETS, CABLE HOLDER, ANCHOR BOLTS

SHALL BE BRASS SEWAGE SWING CHECK VALVES WITH CLEAN–OUT PORTS AND BRASS GATE VALVES.
4" SCHEDULE 80 PVC.

FLOAT SWITCHES: UL LISTED SJ ELECTRO MODEL (SJ 30 SWENO).

PUMP SUPPLIER SHALL PROVIDE SUBMERSIBLE PUMPS, SLIDE RAIL ASSEMBLIES, CONTROL PANEL, JUNCTION BOX, FLOAT SWITCHES, ALUMINUM HATCH(S) AND ACCESSORIES TO INSURE PROPER OPERATION AND WARRANTY.

THE COMPLETE PACKAGE PUMPING STATION SHALL HAVE PUMP BASES, RAIL ASSEMBLIES AND DISCHARGE PIPING ASSEMBLED BY TECHNICAL SALES CORPORATION READY TO SHIP FOR FIELD INSTALLATION.

1. 1 TO 1 FILLET FIELD INSTALLED

ARO ENGINEERING
civil, structural & coastal engineering
780 94TH AVE. N. SUITE 102, ST. PETERSBURG, FL 33702
TEL 727.527.5900

FLY VPS
DESTIN - FORT WALTON BEACH AIRPORT

OKALOOSA COUNTY

INFRASTRUCTURE CONSULTING & ENGINEERING
5550 WEST IDLEWILD AVE. SUITE 102
TAMPA, FLORIDA 33634 (813) 330-2701
CERTIFICATE OF AUTHORIZATION NO.: 30862

Project Name:
CONSTRUCT WEST APRON EXPANSION AND INFRASTRUCTURE AT VPS

Designer:	Checked by:
DE	DR
Technician:	ICE Proj. No.:
LM	18-46

Engineer of Record:
ARO ENGINEERING
CERTIFICATE NO. 28919

JOHN B. ADAMS JR. CERTIFICATE No. 53963 STATE OF FLORIDA PROFESSIONAL ENGINEER

JOHN B. ADAMS JR., P.E.
FL P.E. NO. 53963

Notes:

REVISIONS

No.	Description	Date	By

Drawing Name:

FAA A.I.P. Project No.:
3-12-0081-029-2018

FDOT Project No.:

Date:	Sheet Number:
FEB 2019	C9.0

File Path: X:\PROJECTS\E12-190K022C_Destin Airport\DWG\C9.0 PUMP NOTES.dwg Date: 2/18/2019 11:23 AM

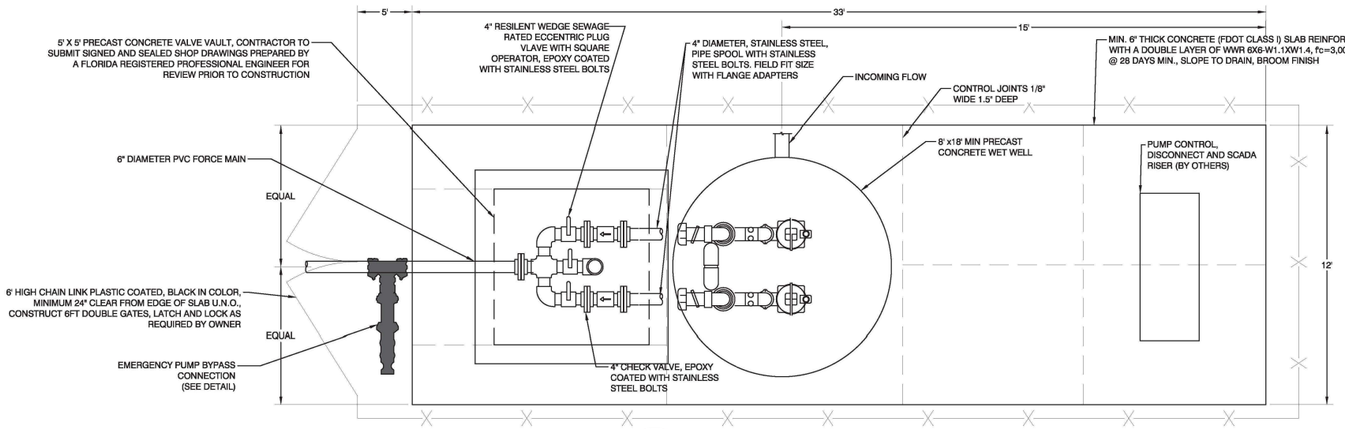

2 C9.1 WETWELL/VALVE BOX LAYOUT
N.T.S.

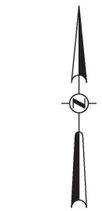

FOR LOCATION OF LIFT STATION SEE SHEET C8.2

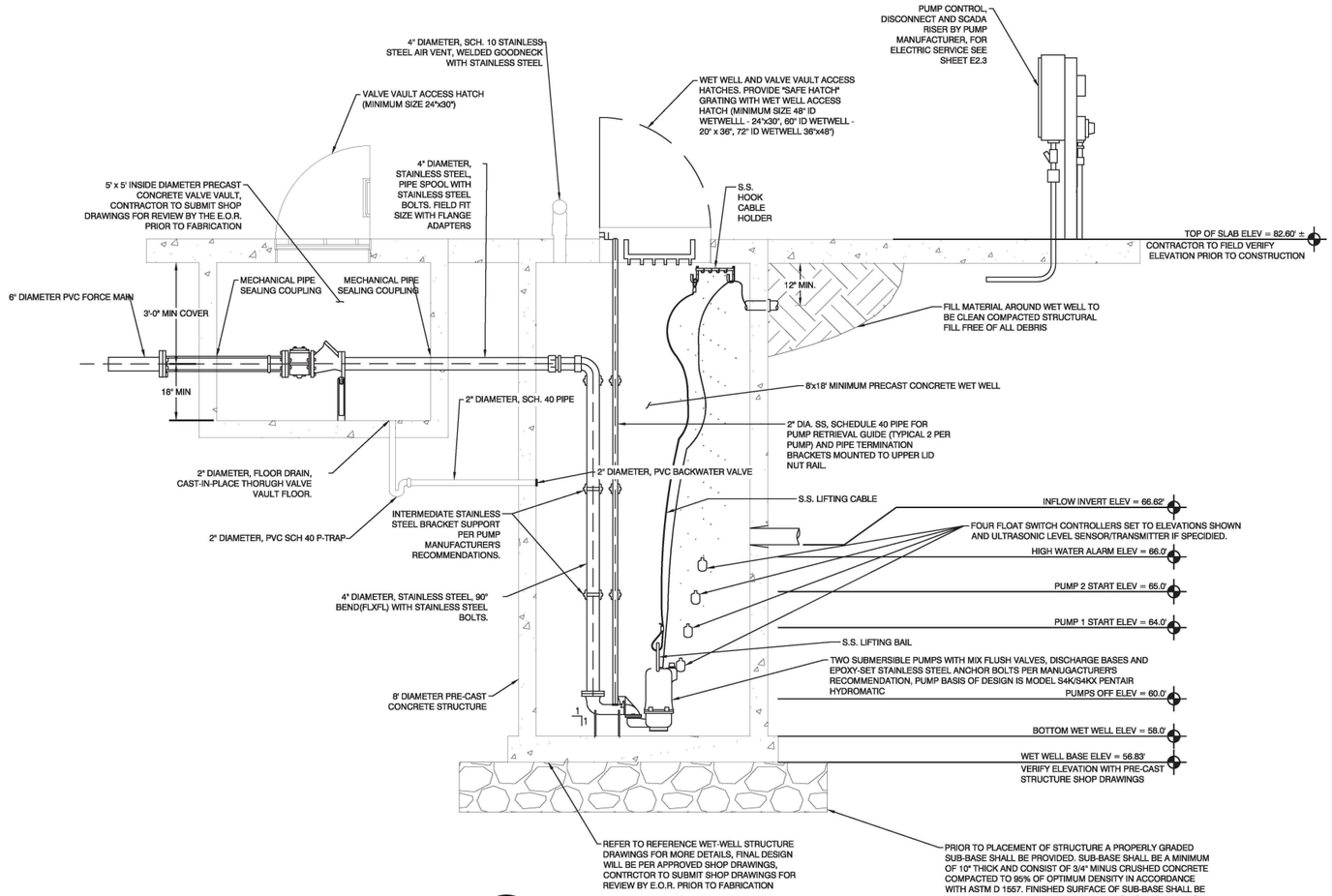

1 C9.1 PUMP DETAIL
N.T.S.

ARO ENGINEERING
civil, structural & coastal engineering
780 94TH AVE. N. SUITE 102, ST. PETERSBURG, FL 33702
TEL 727.527.5900

FLY VPS
DESTIN - FORT WALTON BEACH AIRPORT

OKALOOSA COUNTY

INFRASTRUCTURE CONSULTING & ENGINEERING
5550 WEST IDLEWILD AVE. SUITE 102
TAMPA, FLORIDA 33634 (813) 330-2701
CERTIFICATE OF AUTHORIZATION NO.: 30882

Project Name:
CONSTRUCT WEST APRON EXPANSION AND INFRASTRUCTURE AT VPS

Designer:	Checked by:
DE	DR
Technician:	ICE Proj. No.:
LM	18-46

Engineer of Record: ARO ENGINEERING
CERTIFICATE NO. 28919

JOHN B. ADAMS JR. CERTIFICATE No.53963 STATE OF FLORIDA PROFESSIONAL ENGINEER

JOHN B. ADAMS JR., P.E.
FL P.E. NO. 53963

Notes:

REVISIONS

No.	Description	Date	By

Drawing Name:

FAA A.I.P. Project No.:
3-12-0081-029-2018

FDOT Project No.:

Date:	Sheet Number:
FEB 2019	C9.1

File Path: X:\PROJECTS\E12-19\KO23C_Destin Airport\DWG\C9.1 Pump DTL.dwg Date: 2/18/2019 11:10 AM

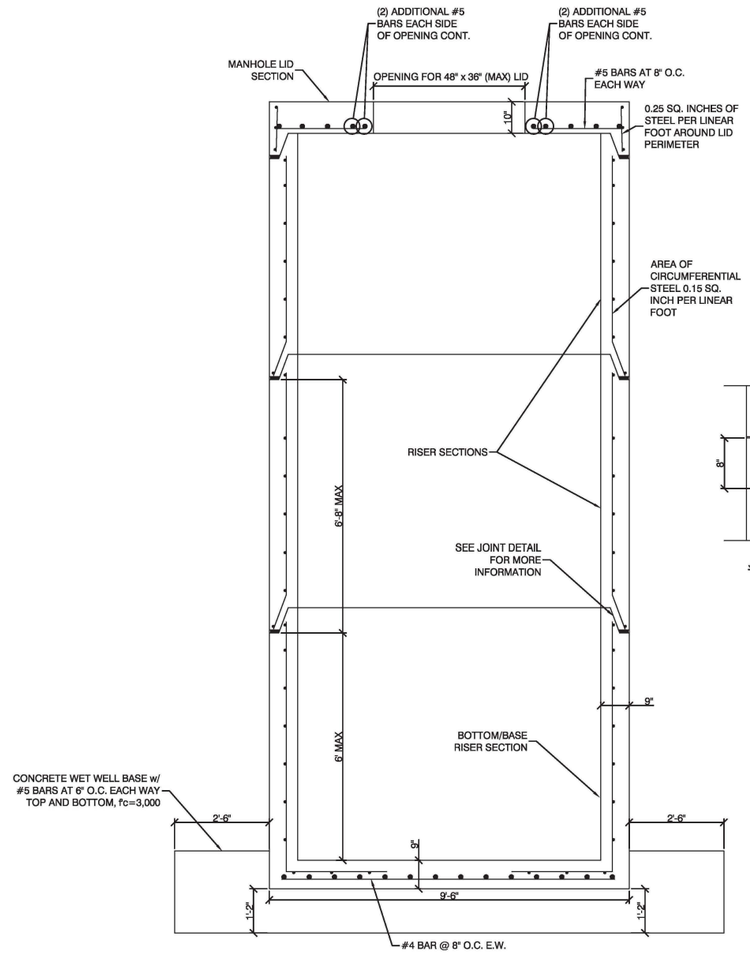

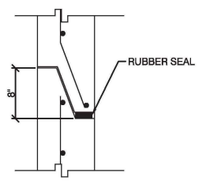

JOINT DETAIL

2 C9.2 PRE-CAST WET WELL DETAIL (FOR REFERENCE ONLY)
N.T.S.

WET WELL NOTES:

1. SOIL BORINGS USED IN PREPARATION OF THESE PLANS WAS TAKEN TO 10FT DEPTH, NO GROUND WATER ENCOUNTERED IN THE BORINGS. CONTRACTOR TO NOTIFY E.O.R. IF GROUND WATER CONDITIONS ARE DIFFERENT. IF GROUND WATER CONDITIONS ARE FOUND TO BE DIFFERENT BOYANCY WILL NEED TO BE CONSIDERED IN WET WELL DESIGN.

2. CONTRACTOR TO PROVIDE A WET WELL DESIGN SIGNED AND SEALED BY A FLORIDA REGISTERED PROFESSIONAL ENGINEER TO E.O.R. PRIOR TO FABRICATION

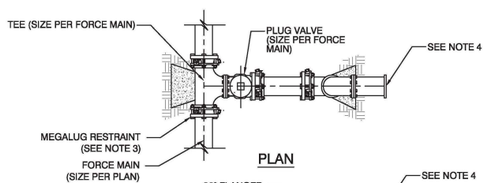

PLAN

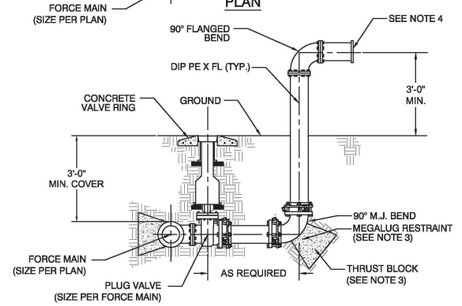

SECTION

NOTES:
1. ALL MATERIALS AND INSTALLATION SHALL BE IN ACCORDANCE WITH AMERICAN STATES UTILITY SERVICES, INC. (ASUS) STANDARDS AND SPECIFCATIONS.
2. ALL DUCTILE IRON PIPE SHALL BE IN ACCORDANCE WITH REQUIREMENTS OF ASUS SPECIFCATIONS.
3. ALL BELOW GRADE FITTINGS SHALL BE RESTRAINED JOINT.
4. BLIND FLANGE. COORDINATE WITH UTILITY FOR DIRECTION TO FACE.
5. ALL PIPE RESTRIANT SHALL BE PER ASUS STANDARD DETAILS AND SPECIFICATIONS.

1 C9.2 EMERGENCY BYPASS PUMP CONNECTION ASUS DWG NO. SP-1E
N.T.S.

ARO ENGINEERING
civil, structural & coastal engineering
780 94TH AVE. N. SUITE 102, ST. PETERSBURG, FL 33702
TEL 727.527.5900

DESTIN - FORT WALTON BEACH AIRPORT

OKALOOSA COUNTY

INFRASTRUCTURE CONSULTING & ENGINEERING
5550 WEST IDLEWILD AVE. SUITE 102
TAMPA, FLORIDA 33634 (813) 330-2701
CERTIFICATE OF AUTHORIZATION NO.: 30862

Project Name:
CONSTRUCT WEST APRON EXPANSION AND INFRASTRUCTURE AT VPS

Designer:	Checked by:
DE	DR
Technician:	ICE Proj. No.:
LM	18-46

Engineer of Record:
ARO ENGINEERING
CERTIFICATE NO. 28919

JOHN B. ADAMS JR. CERTIFICATE NO. No.53963 STATE OF FLORIDA PROFESSIONAL ENGINEER

JOHN B. ADAMS JR., P.E.
FL P.E. NO. 53963

Notes:

REVISIONS

No.	Description	Date	By

Drawing Name:

FAA A.I.P. Project No.:
3-12-0081-029-2018

FDOT Project No.:

Date:	Sheet Number:
FEB 2019	C9.2

File Path: X:\PROJECTS\E12_Nizar\E12-19OK023C_Destin Airport\DWG\C9.2 wetwell.dwg Date: 2/18/2019 11:12 AM

PARKING LOT PLANT SCHEDULE

TREES	QTY	BOTANICAL NAME	COMMON NAME	SIZE	CONTAINER
RM	8	Acer rubrum `October Glory` TM	October Glory Maple	10`-12` Ht.	45 Gallon
RB	9	Betula nigra `Duraheat`	Duraheat River Birch	10`-12` Ht.	45 Gallon
LGM	9	Magnolia grandiflora `Little Gem`	Little Gem Magnolia	7`-8` Ht.	45 Gallon
LO	29	Quercus geminata	Sand Live Oak	2" Cal.	11`-12` Ht.
SO	6	Quercus shumardii	Shumard Oak	3" Cal.	12`-14` Ht.

GROUND COVERS	QTY	BOTANICAL NAME	COMMON NAME
SOD	16,006 sf	Eremochloa ophiuroides	Centipede Sod

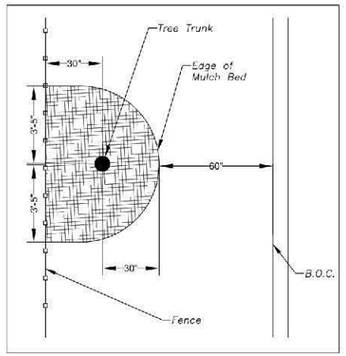

TREE CIRCLE MULCH DETAIL

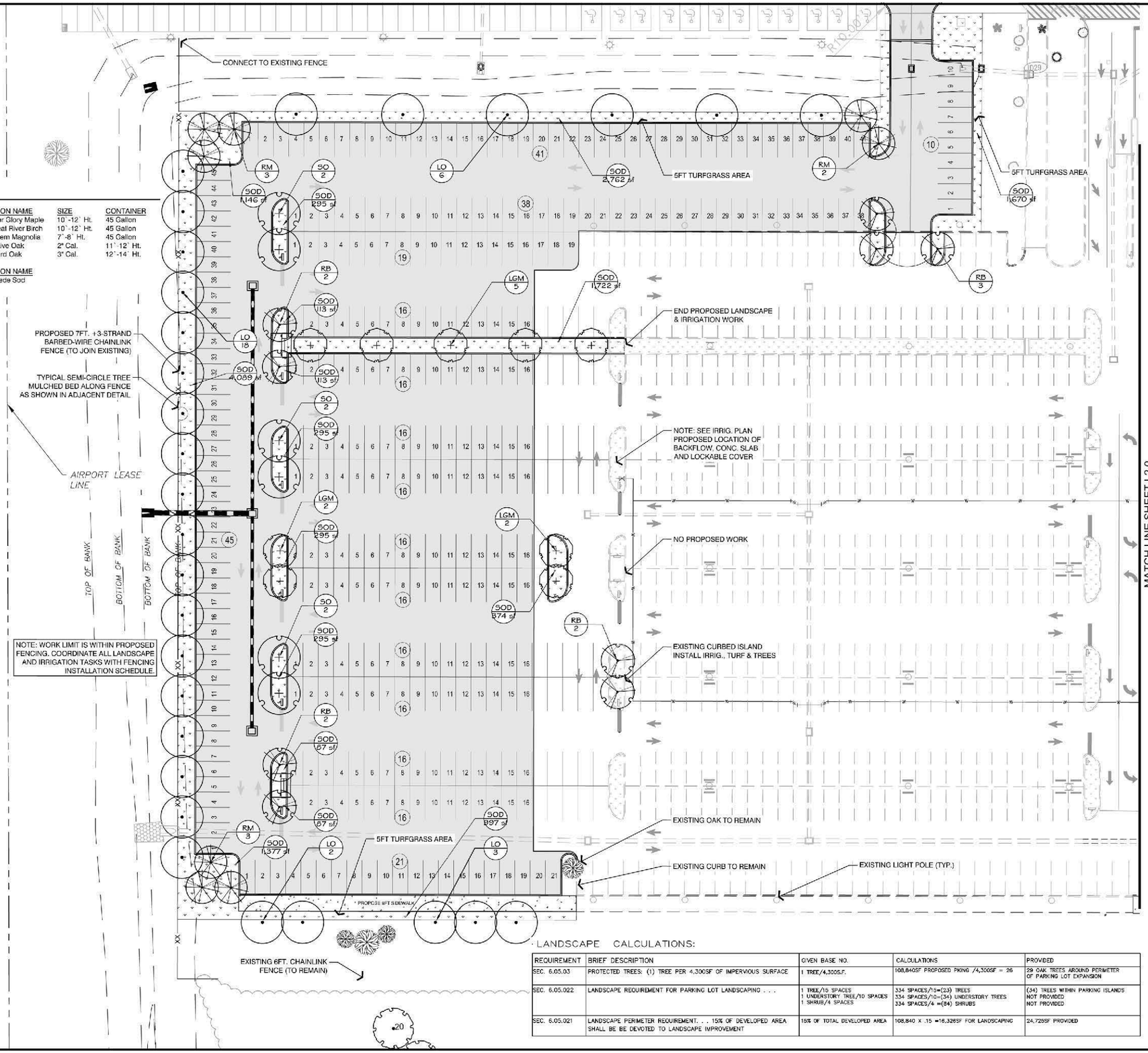

LANDSCAPE CALCULATIONS:

REQUIREMENT	BRIEF DESCRIPTION	GIVEN BASE NO.	CALCULATIONS	PROVIDED
SEC. 6.05.03	PROTECTED TREES: (1) TREE PER 4,300SF OF IMPERVIOUS SURFACE	1 TREE/4,300S.F.	108,840SF PROPOSED PKING /4,300SF = 26	29 OAK TREES AROUND PERIMETER OF PARKING LOT EXPANSION
SEC. 6.05.022	LANDSCAPE REQUIREMENT FOR PARKING LOT LANDSCAPING . . .	1 TREE/15 SPACES 1 UNDERSTORY TREE/10 SPACES 1 SHRUB/4 SPACES	334 SPACES/15=(23) TREES 334 SPACES/10=(34) UNDERSTORY TREES 334 SPACES/4 =(84) SHRUBS	(34) TREES WITHIN PARKING ISLANDS NOT PROVIDED NOT PROVIDED
SEC. 6.05.021	LANDSCAPE PERIMETER REQUIREMENT. . . 15% OF DEVELOPED AREA SHALL BE BE DEVOTED TO LANDSCAPE IMPROVEMENT	15% OF TOTAL DEVELOPED AREA	108,840 X .15 =16,326SF FOR LANDSCAPING	24,725SF PROVIDED

0 15 30 60

File Path: T:\Projects\ICE18DESTINAIRL1.0 LANDSCAPE PLANS.dwg Date: 2/26/2019 1:11 PM

FLY VPS

DESTIN - FORT WALTON BEACH AIRPORT

OKALOOSA COUNTY

INFRASTRUCTURE CONSULTING & ENGINEERING
5550 WEST IDLEWILD AVE. SUITE 102
TAMPA, FLORIDA 33634 (813) 330-2701
CERTIFICATE OF AUTHORIZATION NO.: 30862

Project Name:
CONSTRUCT WEST APRON EXPANSION AND INFRASTRUCTURE AT VPS

Designer:	Checked by:
AHC	BLB
Technician:	DHM Proj No.:
	ICE18DESTINAIR

Engineer of Record:
DAVID H. MELVIN, INC.
Consulting Engineers

Notes:

REVISIONS

No.	Description	Date	By

Drawing Name:
LANDSCAPE PLAN NO. 1

FAA A.I.P. Project No.:
3-12-0081-029-2018

FDOT Project No.:

Date:	Sheet Number:
FEB 2019	L1.0

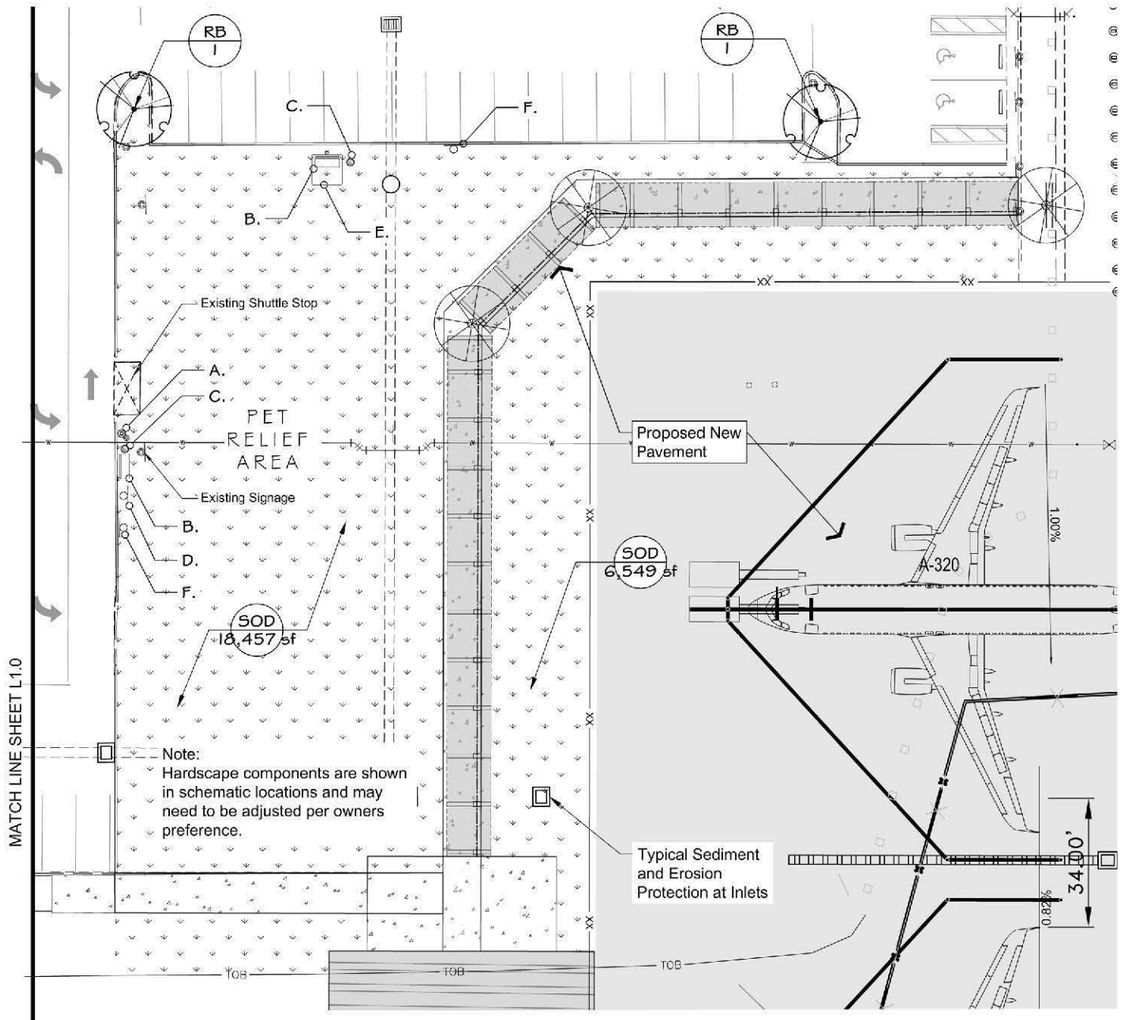

HARDSCAPE SCHEDULE PET RELIEF AREA

CODE	QTY	DESCRIPTION	MODEL/MANUFACTURER
A.	1	FIDO & ME WATER FOUNTAIN	ULTRASITE- PBARK-498
B.	2	6 FT. BENCH W/BACK, PERFORATED W/ LASER CUT PAW PRINTS & BONES	ULTRASITE-PBARK-9406-P6
C.	2	TRASH RECEPTACLE 32 GAL. W/ PAW PRINTS, PLASTIC LINER, ROLLED FLAT TOP AND IN-GROUND KIT	ULTRASITE-PL-32, FTR-32-98, IG KIT
D.	1	PET WASTE STATION, NO RECEPTACLE BLUE OR GREEN WITH SIGN OPTION	ULTRASITE-PBARK-488, IG KIT
E.	1	8'X8' CANTILEVERED UMBRELLA SHADE 8' EAVE HEIGHT WITH POWDER-COATED FRAME	ULTRASHADE-M-SHADE
F.	2	PET RELIEF AREA SIGN (SEE DETAIL)	OSHA SYMBOL ONE-28888

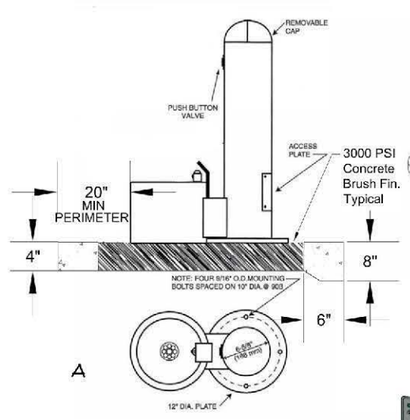

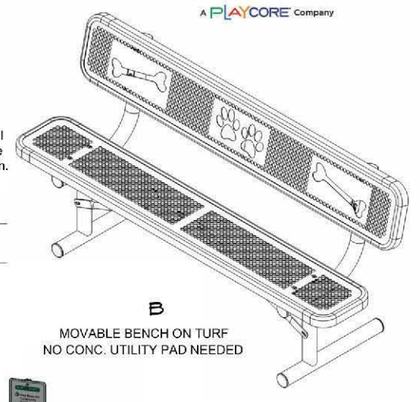

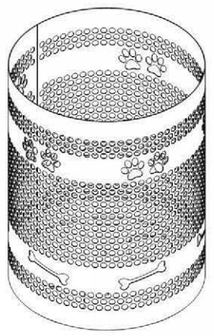

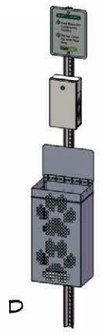

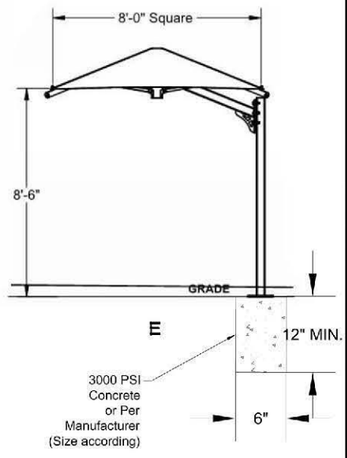

PLANT SCHEDULE PET RELIEF AREA

TREES	CODE	QTY	BOTANICAL NAME	COMMON NAME	SIZE
	RB	2	Betula nigra 'Duraheat'	Duraheat River Birch	---
GROUND COVERS	**CODE**	**QTY**	**BOTANICAL NAME**	**COMMON NAME**	**SIZE**
	SOD	26,036 sf	Eremochloa ophiuroides	Centipede Sod	---

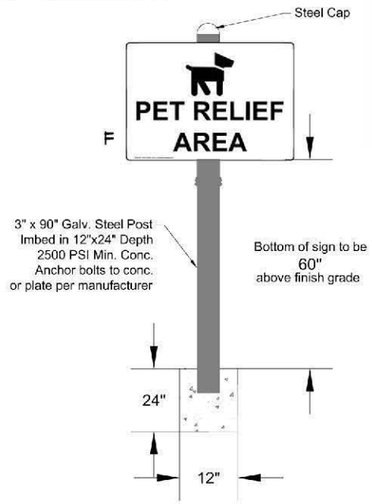

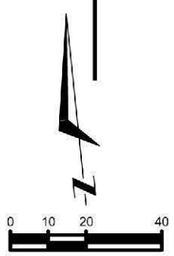

File Path: T:\Projects\ICE18DESTINAIR\L1.0 LANDSCAPE PLANS.dwg Date: 2/26/2019 1:10 PM

FLY VPS

DESTIN - FORT WALTON BEACH AIRPORT

OKALOOSA COUNTY

INFRASTRUCTURE CONSULTING & ENGINEERING
5550 WEST IDLEWILD AVE. SUITE 102
TAMPA, FLORIDA 33634 (813) 330-2701
CERTIFICATE OF AUTHORIZATION NO.: 30862

Project Name:
CONSTRUCT WEST APRON EXPANSION AND INFRASTRUCTURE AT VPS

Designer:	Checked by:
AHC	BLB
Technician:	DHM Proj. No.:
	ICE18DESTINAIR

Engineer of Record:
DAVID H. MELVIN, INC.
Consulting Engineers

Notes:

REVISIONS

No.	Description	Date	By

Drawing Name:
LANDSCAPE PLAN NO. 2

FAA A.I.P. Project No.:
3-12-0081-029-2018

FDOT Project No.:

Date:	Sheet Number:
FEB 2019	L2.0

NOT IN BID

PARKING LOT IRRIGATION SCHEDU

SYMBOL	MANUFACTURER/MODEL/DESCRIPTION	TY	PSI
ES LCS RCS CS SS	Hunter PROS-06-CV 5` strip spray Turf Spray, 6.0` Pop-Up. With Drain Check Va wiper seal with UV Resistant Material.		30
Q T H F	Hunter PROS-06-CV 8` radius Turf Spray, 6.0` Pop-Up. With Drain Check Va wiper seal with UV Resistant Material.		30
EST CST SST	Hunter PROS-06-CV 9` side strip spray Turf Spray, 6.0` Pop-Up. With Drain Check Va wiper seal with UV Resistant Material.		30
Q T H F	Hunter PROS-06-CV 10` radius Turf Spray, 6.0` Pop-Up. With Drain Check Va wiper seal with UV Resistant Material.		30
Q T H TT TQ F	Hunter PROS-06-CV 12` radius Turf Spray, 6.0` Pop-Up. With Drain Check Va wiper seal with UV Resistant Material.		30
Q T H TT TQ F	Hunter PROS-06-CV 15` radius Turf Spray, 6.0` Pop-Up. With Drain Check Va wiper seal with UV Resistant Material.		30
Q H F	Hunter PROS-06-CV 17` radius Turf Spray, 6.0` Pop-Up. With Drain Check Va wiper seal with UV Resistant Material.		30
	Hunter PROS-06-CV adjustable arc Turf Spray, 6.0` Pop-Up. With Drain Check Va wiper seal with UV Resistant Material.		30

SYMBOL	MANUFACTURER/MODEL/DESCRIPTION	TY
	Hunter ICV-G 2` 1", 1-1/2", 2", and 3" Plastic Electric Remote Control Valves, Globe Configuration, with NPT Threaded Inlet/Outlet, for Commercial/Municipal Use.	
	Griswold Isolator BV Brass DWS Valve with Ball Valve. Sizes 1/2` through 2-1/2`, same size as irrigation line. 100 mesh stainless steel strainer and packing gland ball valve are ideal for dirty water applications.	4
	Hunter ICV-G 3` 3` Plastic Electric Master Valve, Globe Configuration, with NPT Threaded Inlet/Outlet, for Commercial/Municipal Use.	1
	Pressure Reducing Valve Buckner Superior 3"	1
BF	Watts 009 3" Reduced Pressure Backflow Preventer	1
C	Hunter PC-400 w/ (01) PCM-300 & (01) PCM-900 Light Commercial & Residential Controller, 16-station expanded module controller, 120 VAC, Outdoor model	1
	Point of Connection 3`	1
	Irrigation Lateral Line: PVC Class 200 SDR 21	3,243 l.f.
	Irrigation Mainline: PVC Schedule 40	1,467 l.f.
	Pipe Sleeve: PVC Schedule 40	813.4 l.f.

Valve Callout: Valve Number, Valve Flow, Valve Size

VALVE SCHEDULE

NUMBER	MODEL	SIZE	TYPE	GPM	HEADS
1	Hunter ICV-G	2`	Turf Spray	37.6	50
2	Hunter ICV-G	2`	Turf Spray	33.0	33
3	Hunter ICV-G	2`	Turf Spray	38.0	42
4	Hunter ICV-G	2`	Turf Spray	31.3	44
5	Hunter ICV-G	2`	Turf Spray	38.6	38
6	Hunter ICV-G	2`	Turf Spray	39.6	29

0 15 30 60

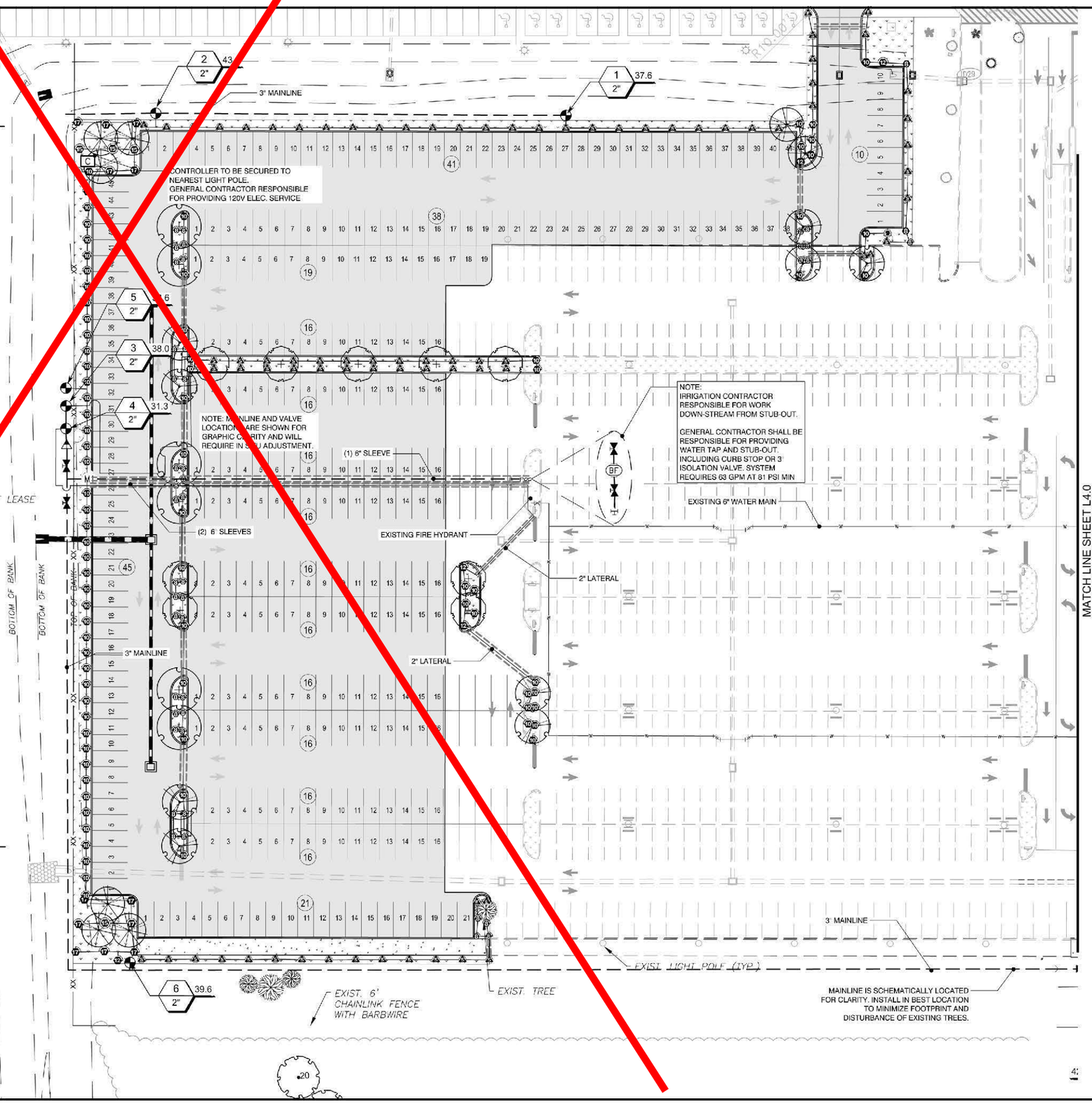

File Path: C:\Projects\ICE18DESTINAIRL1.0 LANDSCAPE PLANS.dwg Date: 2/26/2019 1:05 PM

FLY VPS
DESTIN - FORT WALTON BEACH AIRPORT

OKALOOSA COUNTY

INFRASTRUCTURE CONSULTING & ENGINEERING
5550 WEST IDLEWILD AVE. SUITE 102
TAMPA, FLORIDA 33634 (813) 330-2701
CERTIFICATE OF AUTHORIZATION NO.: 30862

Project Name:
CONSTRUCT WEST APRON EXPANSION AND INFRASTRUCTURE AT VPS

Designer:	Checked by:
AHC	BLB
Technician:	DHM Proj No.:
	ICE18DESTINAIR

Engineer of Record:
DAVID H. MELVIN, INC.
Consulting Engineers

Notes:

REVISIONS

No.	Description	Date	By

Drawing Name:
IRRIGATION PLAN NO. 1

FAA A.I.P. Project No.:
3-12-0081-029-2018

FDOT Project No.:

Date:	Sheet Number:
FEB 2019	L3.0

NOT IN BID

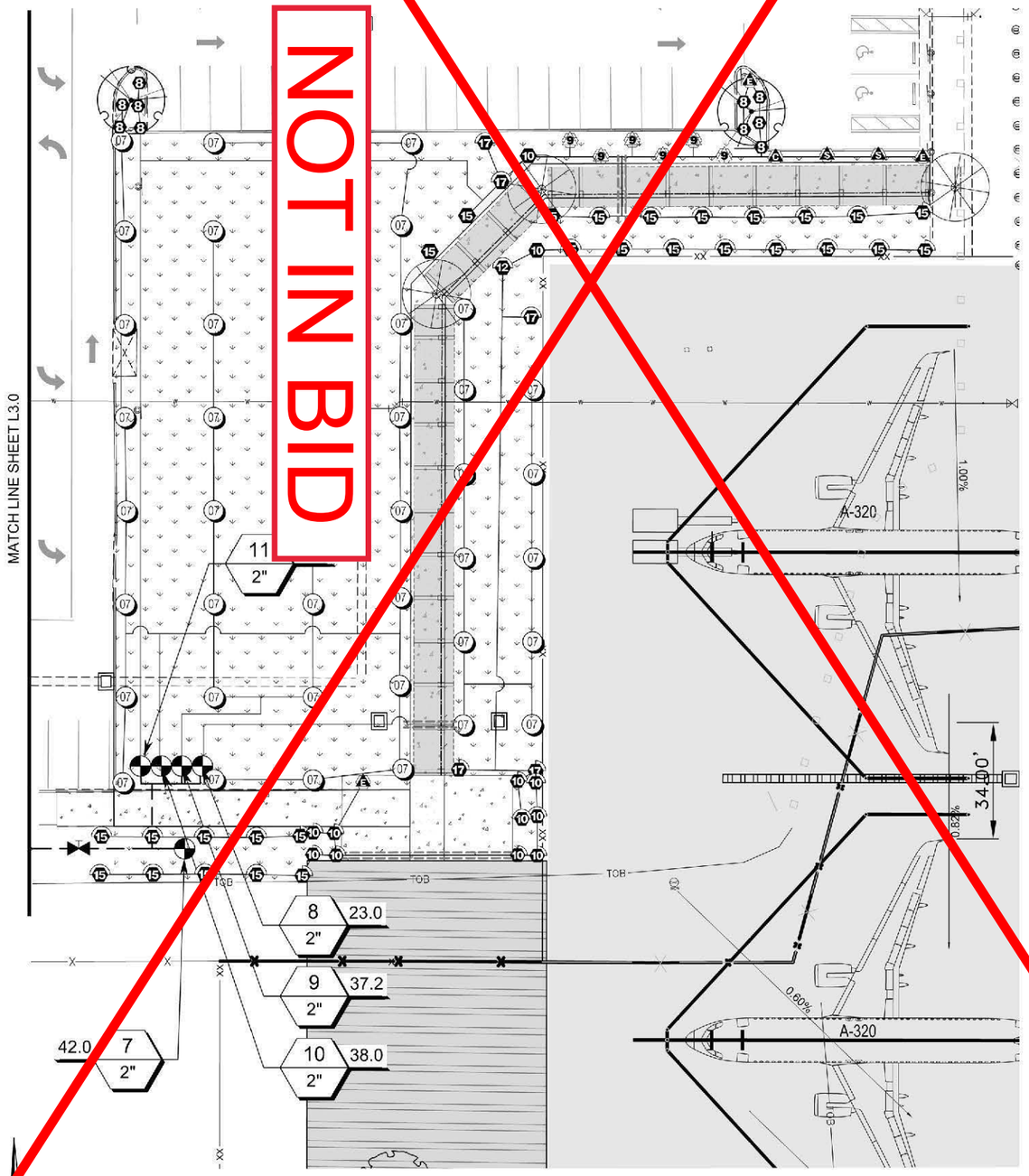

IRRIGATION SCHEDULE PETRELIEFAREA

SYMBOL	MANUFACTURER/MODEL/DESCRIPTION	QTY
ES LCS RCS CS SS	Hunter PROS-06-CV 5' strip spray Turf Spray, 6.0" Pop-Up. With Drain Check Valve. Co-molded wiper seal with UV Resistant Material.	6
EST CST SST	Hunter PROS-06-CV 9' side strip spray Turf Spray, 6.0" Pop-Up. With Drain Check Valve. Co-molded wiper seal with UV Resistant Material.	6
Q T H F	Hunter PROS-06-CV 10' radius Turf Spray, 6.0" Pop-Up. With Drain Check Valve. Co-molded wiper seal with UV Resistant Material.	22
Q T H TT TQ F	Hunter PROS-06-CV 15' radius Turf Spray, 6.0" Pop-Up. With Drain Check Valve. Co-molded wiper seal with UV Resistant Material.	15
Q H F	Hunter PROS-06-CV 17' radius Turf Spray, 6.0" Pop-Up. With Drain Check Valve. Co-molded wiper seal with UV Resistant Material.	4
	Hunter PROS-06-CV adjustable arc Turf Spray, 6.0" Pop-Up. With Drain Check Valve. Co-molded wiper seal with UV Resistant Material.	15

SYMBOL	MANUFACTURER/MODEL/DESCRIPTION	QTY
	Hunter I-20-06 Turf Rotor, 6.0" Pop-Up. Adjustable and Full Circle. Plastic Riser. Drain Check Valve. Standard Nozzle.	43

SYMBOL	MANUFACTURER/MODEL/DESCRIPTION	QTY
	Hunter ICV-G 1", 1-1/2", 2", and 3" Plastic Electric Remote Control Valves, Globe Configuration, with NPT Threaded Inlet/Outlet, for Commercial/Municipal Use.	5
	Griswold Isolator BV Brass DWS Valve with Ball Valve. Sizes 1/2" through 2-1/2", same size as irrigation line. 100 mesh stainless steel strainer and packing gland ball valve are ideal for dirty water applications.	1
	Irrigation Lateral Line: PVC Class 200 SDR 21	2,421 l.f.
	Irrigation Mainline: PVC Schedule 40	101.4 l.f.
	Pipe Sleeve: PVC Schedule 40	85.0 l.f.

Valve Callout
Valve Number
Valve Flow
Valve Size

VALVE SCHEDULE

NUMBER	MODEL	SIZE	TYPE	GPM	HEADS
7	Hunter ICV-G	2"	Turf Spray	42.0	34
8	Hunter ICV-G	2"	Turf Rotor	23.0	14
9	Hunter ICV-G	2"	Turf Rotor	37.2	12
10	Hunter ICV-G	2"	Turf Rotor	38.0	20
11	Hunter ICV-G	2"	Turf Spray	42.0	33

FLY VPS
DESTIN - FORT WALTON BEACH AIRPORT

OKALOOSA COUNTY

INFRASTRUCTURE CONSULTING & ENGINEERING
5550 WEST IDLEWILD AVE. SUITE 102
TAMPA, FLORIDA 33634 (813) 330-2701
CERTIFICATE OF AUTHORIZATION NO.: 30662

Project Name:
CONSTRUCT WEST APRON EXPANSION AND INFRASTRUCTURE AT VPS

Designer:	Checked by:
AHC	BLB
Technician:	DHM Proj. No.:
	ICE18DESTINAIR

Engineer of Record:
DAVID H. MELVIN, INC.
Consulting Engineers

Notes:

REVISIONS

No.	Description	Date	By

Drawing Name:
IRRIGATION PLAN NO. 2

FAA A.I.P. Project No.:
3-12-0081-029-2018

FDOT Project No.:

Date:	Sheet Number:
FEB 2019	L4.0

File Path: C:\Projects\ICE18DESTINAIR\L1.0 LANDSCAPE PLANS.dwg Date: 2/28/2019 1:08 PM

GENERAL NOTES:

1. PLANS ARE INTENDED TO DEPICT THE RLA DESIGNER'S BEST DESIGN INTENT AND KNOWN SITE CONDITIONS. SOME MINOR ADJUSTMENTS MAY BE REQUIRED. IF FIELD ADJUSTMENTS ARE REQUIRED, CONTRACTOR SHALL NOTIFY OWNERS REPRESENTATIVE AND RECEIVE APPROVAL AND SUBSEQUENTLY ACCURATELY RECORD ADJUSTMENTS AND QUANTITIES ON AS-BUILT PLANS.

2. CONTRACTOR SHALL NOTIFY THE OWNER'S REPRESENTATIVE IMMEDIATELY OF ANY UNFORESEEN SITE CONDITIONS. (COMPACTED SOIL/SUBGRADE, DEBRIS, ROADWAY BASE, MATERIALS, POOR DRAINAGE, UTILITY CONFLICTS, ETC.) PRIOR TO PROCEEDING WITH LANDSCAPE INSTALLATION.

3. ANY PUBLIC LAND CORNER WITHIN THE LIMITS OF CONSTRUCTION IS TO BE PROTECTED. IF A CORNER MONUMENT IS IN DANGER OF BEING DESTROYED AND HAS NOT BEEN PROPERLY REFERENCED, THE CONTRACTOR SHOULD NOTIFY THE GENERAL CONTRACTOR AND OWNERS REPRESENTATIVE.

4. ALL AREAS OUTSIDE THE CONSTRUCTION LIMITS THAT ARE DAMAGED OR DISTURBED BY THE LANDSCAPE CONTRACTORS OPERATIONS SHALL BE REPAIRED OR REPLACED BY THE LANDSCAPE CONTRACTOR AT THEIR EXPENSE.

5. THE CONTRACTOR SHALL NOT BRING ANY HAZARDOUS MATERIALS ONTO THE PROJECT. THE CONTRACTOR SHALL NOT DISTURB OR STORE MATERIALS OR EQUIPMENT ON ANY WETLANDS, NATURAL ECOSYSTEM AREAS, OR WITHIN THE DRIPLINE OF EXISTING TREES.

6. PLANS ARE INTENDED TO DEPICT THE RLA DESIGNER'S BEST DESIGN INTENT AND CONFORMANCE SITE CONDITIONS. SOME MINOR ADJUSTMENTS MAY BE REQUIRED. IF FIELD ADJUSTMENTS ARE REQUIRED, CONTRACTOR SHALL NOTIFY OWNERS REPRESENTATIVE AND RECEIVE APPROVAL AND SUBSEQUENTLY ACCURATELY RECORD ADJUSTMENTS AND QUANTITIES ON AS-BUILT PLANS.

7. THE CONTRACTOR SHALL RESTRICT PERSONNEL, THE USE OF EQUIPMENT AND THE STORAGE OF MATERIALS TO AREAS WITHIN THE LIMITS OF CONSTRUCTION. ANY OFF-SITE STORAGE AREA WILL REQUIRE PRIOR APPROVAL BY THE OWNER'S REPRESENTATIVE.

8. CONTRACTOR SHALL NOT CAUSE CONDITIONS OF EROSION OR SEDIMENTATION DISCHARGE ON ROADWAY AT ANY TIME DURING CONSTRUCTION.

9. PRODUCT SAMPLES AND DATA SHEETS SHALL BE SUBMITTED FOR ALL PROPOSED MATERIALS, INCLUDING BUT NOT LIMITED TO STAKING AND BRACING KITS, MYCORRHIZAL SOIL INOCULANT, FERTILIZER, PINE STRAW MULCH, TOPSOIL AND BLENDED SOIL FOR REVIEW AND APPROVAL BY THE OWNER'S REPRESENTATIVE PRIOR TO DELIVERY TO SITE.

10. SUBMITTALS AND NOTIFICATIONS: NON-COMPREHENSIVE (EXAMPLE ONLY)
A. PLANT MATERIAL DELIVERY-CORRESPOND IN WRITING; EMAIL OR OTHERWISE
B. UNFORESEEN SITE CONDITIONS-CORRESPOND IN WRITING; EMAIL OR OTHERWISE
C. TREE CERTIFICATIONS-FROM NURSERY ASSURING SPECIES TRUE TO SPECIFIED CULTIVAR AND SPECIES
D. PRODUCT SAMPLES (MULCH, FERTILIZER, HERBICIDE, ADDITIVES) ETC.
E. BACKFILL BLENDED SOIL MIXTURE ANALYSIS
F. TREE STAKING MATERIALS

11. ALL AREAS INADVERTENTLY DISTURBED AND NOT SPECIFICALLY DESIGNATED ON PLANS, SHALL BE RE-PLANTED AT THE COST OF THE CONTRACTOR. ALL DAMAGED AND/OR DISTURBED AREAS SHALL BE RESTORED TO PREVIOUS CONDITIONS OR BETTER. ANY DISTURBED AREAS TO RECEIVE TURF SHALL BE SMOOTHLY GRADED AND FIRM WITH POSITIVE DRAINAGE PRIOR TO THE INSTALLATION OF SOD.

12. THE CONTRACTOR IS REQUIRED TO COMPLY WITH THE STATE OF FLORIDA EROSION AND SEDIMENT CONTROL MANUAL. THE COST OF EROSION CONTROL SHALL BE INCLUDED IN THE COST OF THE PROJECT.

13. ALL CONTRACTORS SHALL BE REQUIRED TO COMPLETELY REMOVE ALL TRASH, DEBRIS AND EXCESS MATERIALS FROM THE WORK AREA AND THE PROPERTY (ESPECIALLY AT ALL CURB, GUTTERS AND SIDEWALKS) DAILY DURING INSTALLATION.

PLANTING NOTES:

SCOPE OF WORK:
THIS WORK SHALL CONSIST OF PERFORMING MINOR CLEARING AND GRUBBING AS NEEDED, SOIL PREPARATION, FINISH GRADING, TREE, TURFGRASS AND IRRIGATION INSTALLATION, INCLUDING ALL LABOR, MATERIALS, TOOLS, EQUIPMENT, TESTING AND ANY APPROVALS, WARRANTY, MAINTENANCE AND OTHER APPURTENANCES NECESSARY FOR THE COMPLETION OF THIS PROJECT. PLANTING INSTALLATION SHALL CONFORM AT MINIMUM TO THE DETAILS PROVIDED WITHIN THESE PLANS.

1. ALL PLANTING AREAS ADJACENT TO PAVEMENT SHALL HAVE A FINISH GRADE OF SOIL NO LESS THAN 1" BELOW THE TOP PAVEMENT/CURB.

2. THOROUGHLY ERADICATE AND SPRAY TO KILL EXISTING LANDSCAPE GRASS AND WEED SURFACE. HAND GRUB AND THOROUGHLY RAKE ALL PROPOSED GROUND COVER AND GRASS AREAS AS NEEDED TO ERADICATE WEED ROOTS. REFER TO THE CLEARING, GRUBBING AND THE PREPARATION NOTES.

3. ALL PLANT MATERIAL SHALL BE INSPECTED AND APPROVED BY THE OWNER'S REPRESENTATIVE AT THE GROWING SITE, NURSERY OR HANDLING AREA DESIGNATED FOR THE PROJECT SITE. ALL GRADABLE NURSERY PLANTS SHALL BE FLORIDA #1 OR BETTER AS DESCRIBED IN "GRADES AND STANDARDS FOR NURSERY PLANTS", STATE OF FLORIDA LATEST EDITION. CONTAINER GROWN PLANTS: A MIN. OF 80% OF THE CONTAINER ROOTBALL MUST BE BOUND BY THE ROOT SYSTEM. ENGIRCLING OR "RING" ROOTS ARE PROHIBITED AND PLANTS WILL BE REJECTED.
- PLANTING SIZE DETERMINATION: SHADE TREES: HEIGHT SHALL BE MEASURED FROM THE CROWN OF THE ROOT BALL TO THE TOP OF MATURE GROWTH. SPREAD SHALL BE MEASURED TO THE END OF BRANCHING EQUALLY AROUND THE CROWN FROM THE CENTER OF THE TRUNK. MEASUREMENTS ARE NOT TO INCLUDE ANY TERMINAL GROWTH. SINGLE TRUNK TREES SHALL BE FREE OF "V" CROTCHES THAT COULD BE POINTS OF WEAK LIMB STRUCTURE OR DISEASE INFESTATION.
- SHRUBS: HEIGHT SHALL BE MEASURED FROM THE CROWN OF THE ROOT BALL TO THE AVERAGE HEIGHT OF THE TOP OF THE PLANT. SPREAD SHALL BE MEASURED TO THE END OF BRANCHING EQUALLY AROUND THE SHRUB MASS. MEASUREMENTS ARE NOT TO INCLUDE ANY TERMINAL GROWTH.

4. THE CONTRACTOR SHALL NOTIFY THE OWNER'S REPRESENTATIVE A MINIMUM OF 10 BUSINESS DAYS PRIOR TO DELIVERY OF TREES AND SHRUBS SO THAT A REPRESENTATIVE MAY BE PRESENT TO VERIFY PLANT MATERIALS MEET FLORIDA NO. 1 STANDARDS. DOCUMENT CONFORMANCE PER SECTION 580-2.1.1 SIZES SPECIFIED IN THE PLANT LIST ARE MINIMUM SIZES TO WHICH THE PLANTS ARE TO BE JUDGED. FAILURE TO MEET MINIMUM SIZE ON ANY PLANT WILL RESULT IN REJECTION OF THAT PLANT. ALL PLANTS SHALL BE HEALTHY, VIGOROUS, WELL BRANCHED, FREE OF DISEASE, INSECT EGGS, AND LARVAE,AND SHALL HAVE ADEQUATE ROOT SYSTEMS.ALL CONTAINER GROWN MATERIAL SHALL BE HEALTHY, VIGOROUS, WELL-ROOTED PLANTS AND ESTABLISHED IN THE CONTAINER IN WHICH THEY ARE SOLD. THE PLANTS SHALL HAVE TOPS WHICH ARE GOOD QUALITY AND ARE IN A HEALTHY GROWING CONDITION.ALL ROOT BOUND PLANTS SHALL BE REJECTED

5. ALL MATERIALS AND WORKMANSHIP SHALL BE WARRANTED FOR A PERIOD OF (1) ONE YEAR FROM DATE OF FINAL ACCEPTANCE OF PROJECT. COST OF WARRANTY PERIOD MAINTENANCE WORK AND MATERIALS SHALL BE INCLUDED IN THE LUMP SUM COST OF THE PROJECT UNLESS OTHERWISE INSTRUCTED AND INDICATED ON BID FORM.

6. NO SUBSTITUTIONS OF SPECIFIED PLANT MATERIALS WILL BE PERMITTED UNLESS APPROVED BY THE OWNERS REPRESENTATIVE LANDSCAPE ARCHITECT OR ASSIGNEES. THE OWNERS REP SHALL APPROVE THE LAYOUT OF PROPOSED BEDS AS STAKED OUT BY CONTRACTOR. NO PLANTS WILL BE INSTALLED WITHOUT THE APPROVAL OF THE OWNER'S REPRESENTATIVE. IF ANY CHANGES ARE PROPOSED TO THE DESIGN (PLANT TYPES, SIZE, LOCATION OR SPACING, PLANT ARRANGEMENTS, BEDLINE DESIGN, ETC.) THE OWNER'S REP SHALL BE CONTACTED FOR APPROVAL.

7. THE CONTRACTOR SHALL INCLUDE A SEPARATE LINE ITEM LUMP SUM IN HIS/HER BID FOR MAINTENANCE OF ALL NEWLY INSTALLED ITEMS, PLANT MATERIAL WITHIN SCOPE OF PROJECT. MAINTENANCE SHALL INCLUDE BUT IS NOT LIMITED TO REPLACEMENT, MOWING, PRUNING, MULCHING, WATERING, FERTILIZATION AND PEST/DISEASE MANAGEMENT. ALL PLANT MATERIAL SHALL BE MAINTAINED TO THE EXISTING STANDARD MAINTENANCE OF CARE FOR THESE AREAS AND SHALL CONFORM TO WARRANTY PERIOD MAINTENANCE REQUIREMENTS OUTLINED IN THESE PLANS.

PLANTING NOTES CONTINUED:

8. THE TREE STAKING DETAIL IN THESE PLANS SHALL BE ADHERED TO AND ANY DEVIATIONS MUST BE APPROVED BY THE PROJECT RLA IN WRITING AFTER SUBMITTING SHOP DRAWING DESCRIPTIONS.

9. PLANTING BED PREPARATION:
a. STAKE LOCATIONS, LIMITS OF PLANTS AND PLANTING BEDS SHALL REFLECT PLANS TO THE GREATEST EXTENT POSSIBLE. COORDINATE WITH OWNER'S REPRESENTATIVE TO VIEW LAYOUT AND BED OUTLINES ONSITE. CONTRACTOR SHALL MAKE MODIFICATIONS AS MAY BE REQUESTED.
b. HERBICIDE APPLICATION: FOR PROPOSED TURF AREAS AND MULCH BED AREAS, BEGIN TURF SPRAYING PROCESS A MIN. OF 30 DAYS PRIOR TO PLANTING AS FOLLOWS: SPRAY AREAS TO BE KILLED WITH GLYPHOSATE PER MANUFACTURER'S RECOMMENDATIONS. 7 DAYS AFTER SPRAYING, CLOSE MOW TO 1" HEIGHT. 14 DAYS AFTER CLOSE MOWING, RE-SPRAY WITH GLYPHOSATE PER MANUFACTURER'S RECOMMENDATIONS. 7 DAYS AFTER RE-SPRAYING, PROCEED WITH TURF REMOVAL IN PROPOSED SOD AREAS. LEAVE KILLED TURF IN PLACE FOR PROPOSED MULCH BEDS. PROPOSED INDIVIDUAL TREE RINGS DO NOT REQUIRE HERBICIDE APPLICATION.
c. TURF AND OTHER MATERIAL SHALL BE THOROUGHLY REMOVED PRIOR TO THE PLANTING AND BACKFILL PROCESS.
d. EXCAVATE PLANTING PITS AT DIAMETER/SIZE DETAILED. THE DEPTH OF THE HOLE SHALL BE 2" SHALLOWER THAN THE ROOTBALL; THEN DIG DEEPER AROUND THE HOLE'S PERIMETER, CREATING A FIRM CENTRAL PLATEAU SO THAT EXCESS WATER WILL FLOW AWAY FROM ROOTBALL.
e. WHERE PLANTING BEDS ARE PROPOSED, CLEAR AND GRUB TO A MIN., DEPTH OF 4" AS NEEDED. REMOVE REMNANT PLANTS AND STUMPS/DEBRIS AS NEEDED. EXCAVATED MATERIAL SHALL BE REMOVED FROM THE SITE AND DISPOSED OF IN A LAWFUL MANNER.
f. PRE-EMERGENT HERBICIDE SHALL BE APPLIED TO ALL PLANTING BEDS. THE HERBICIDE ACTIVE INGREDIENTS SHALL BE SUITABLE FOR CONTROL OF ANNUAL AND PERENNIAL BROADLEAF WEEDS AND GRASSES. THE HERBICIDE SHALL BE APPLIED BY HAND PER MANUFACTURER'S RECOMMENDATIONS FOR APPLICATION METHOD, TIMING AND APPLICATION RATE SHALL BE STRICTLY ADHERED TO.
g. PLACE THE ROOTBALL ON THE PLATEAU, MAKING SURE IT IS 2" HIGHER THAN THE SURROUNDING SOIL.
h. FILL IN PLANTING PIT WITH BLENDED SOIL BACKFILL MIXTURE. SEE NOTE 23 ON THIS SHEET FOR SPECIFICS AND REQUIREMENTS.
i. FILL AND TAMP LIGHTLY AROUND EACH AND EVERY PLANT. FLUSH WITH WATER AND MAKE ADJUSTMENTS TO PROVIDE PROPERLY SET PLANT MATERIAL WITH THE TOP OF THE ROOTBALL EVEN WITH FINISHED GRADE AND WITH ROOT FLARE 1" ABOVE GRADE FOR TREES. INSTALL FERTILIZER PER MANUFACTURER RECOMMENDATIONS .
j. BUILD SAUCER TO CONTAIN WATER AROUND EACH PLANTING PIT. REMOVE EXCESS EXCAVATED SOIL FROM THE SITE.
k. ESTABLISH FINISHED PRE-MULCHED GRADE.
l. SPREAD PINE STRAW ACROSS ENTIRE BED TO A DEPTH OF 3". PINE STRAW SHALL BE FRESH SLASH OR LONGLEAF PINE STRAW. SHRUB BEDS AND TREE RINGS SHALL HAVE A 3"-4" STRAW DEPTH AFTER MANICURE AND COMPACTION; 1" AT CURB- PAVEMENT EDGES.
m. PROPOSED SOD AREAS SHALL BE RAKED SMOOTH, SPREAD TOPSOIL (AVG. 2" DEPTH) ACROSS PROPOSED SOD AREAS TO ESTABLISH PRE-FINISHED GRADE., PLACE SOD WITH STAGGERED JOINTS AND SEAMS TIGHTLY BUTTED TOGETHER. PEG IN PLACE WHERE MOVEMENT OR SLIPPAGE IS A CONCERN.

10. MULCH - SHALL BE FRESH SLASH OR LONGLEAF PINE STRAW. SHRUB BEDS AND TREE RINGS SHALL HAVE 3" PINE STRAW DEPTH AFTER MANICURE AND COMPACTION; 1" AT CURB. TAMP EDGES DOWN WITH FOOT OR HAND TAMPER.

11. "BLENDED SOIL" SHALL CONSIST OF ⅓ MUSHROOM COMPOST OR PEAT, ⅓ COMPOSTED COW MANURE AND ⅓ COMPOSTED BARK.

12. PLANTING BACKFILL MIXTURE FOR TREES AND SHRUBS/GRASSES SHALL CONSIST OF 30% "BLENDED SOIL AND 70% EXISTING SOIL. ALL PLANTING BACKFILL MIXTURES ARE SUBJECT TO OWNER'S REPRESENTATIVE APPROVAL. MIX THOROUGHLY PRIOR TO INSTALLATION. SOIL REQUIRED SHALL BE PROVIDED BY THE CONTRACTOR. CONTRACTOR MUST LOAD, HAUL, AND SPREAD ALL TOPSOIL AND ANY OTHER SOIL ADDITIVES AS REQUIRED.

13. WHERE TREES ARE PLANTED IN ROWS OR LIKE-KIND GROUPS, THEY SHALL BE UNIFORM IN SIZE AND SHAPE.SHRUB MASSES AND GROUNDCOVERS SHALL BE TRIANGULARLY SPACED AT SPACING SHOWN ON PLANTING PLANS.

14. GROUPS OF SHRUBS SHALL BE PLACED IN A CONTINUOUS MULCH BED WITH SMOOTH CONTINUOUS LINES. ALL MULCHED BED EDGES SHALL BE CURVILINEAR IN SHAPE FOLLOWING THE CONTOUR OF THE PLANT MASS. TREES LOCATED WITHIN FOUR FEET OF SHRUB BEDS SHALL SHARE SAME MULCH BED.

15. ALL PLANT MATERIAL SHALL BE SPACED AND LOCATED PER PLAN. IF CONFLICTS ARISE BETWEEN ACTUAL SIZE OF AREA AND PLANS, CONTRACTOR SHALL CONTACT LANDSCAPE ARCHITECT FOR RESOLUTION. FAILURE TO MAKE SUCH CONFLICTS KNOWN TO THE OWNER OR LANDSCAPE ARCHITECT. FAILURE TO NOTIFY OF CONFLICTS SHALL RESULT IN CONTRACTOR'S LIABILITY TO RELOCATE MATERIAL.

16. CONTRACTOR TO SLIGHTLY ADJUST PLANT LOCATIONS IN THE FIELD AS NECESSARY TO BE CLEAR OF DRAINAGE SWALES AND UTILITIES. FINISHED PLANTING BEDS SHALL BE GRADED SO AS TO NOT IMPEDE DRAINAGE AWAY FROM BUILDINGS. IF SIGNIFICANT RELOCATIONS ARE REQUIRED, CONTRACTOR SHALL CONTACT LANDSCAPE ARCHITECT FOR RESOLUTION. FAILURE TO MAKE SUCH RELOCATIONS KNOWN TO THE OWNER OR LANDSCAPE ARCHITECT WILL RESULT IN CONTRACTOR'S LIABILITY OF PLANT MATERIALS.

17. TREE STAKING AND GUYING SHALL BE DONE PER DETAILS. CONTRACTOR SHALL ENSURE THAT TREES REMAIN VERTICAL AND UPRIGHT FOR THE DURATION OF THE GUARANTEE PERIOD. GUYS AND STRAPPING SHALL BE REMOVED AFTER ONE GROWING SEASON.

18. CROWN OF ROOT BALL SHALL BE HIGHER (AFTER SETTLING) THAN ADJACENT SOIL.

19. IF ANY PLANT MORTALITY OCCURS DURING PROJECT INSTALLATION, DEAD PLANTS ARE TO BE REMOVED FROM THE JOB BY THE CONTRACTOR WEEKLY. CONTRACTOR SHALL MAINTAIN AN UPDATED, COMPREHENSIVE LIST OF ALL DEAD MATERIALS REMOVED AND PRESENT A COPY OF THE LIST TO THE OWNER AND OWNER'S REPRESENTATIVE AT THE END OF EVERY MONTH DURING THE CONTRACT PERIOD.

20. TRUNK LOCATIONS OF LARGE MATURING TREES MUST BE A MIN. OF 25 FT FROM O.H. POWER LINES.

21. CONTRACTOR SHALL SUPPLY AMENDMENTS AND FERTILIZERS AS APPROPRIATE TO ENSURE PROPER ESTABLISHMENT AND THRIVING GROWTH OF PLANT MATERIAL.

FOR BIDDING PURPOSES, FERTILIZER FOR INITIAL INSTALLATION OF TREES, SHRUBS AND GROUNDCOVER IS ASSUMED TO BE CONTROLLED RELEASE FERTILIZER WITH A 15-9-12 ANALYSIS AND CONTAINING TRACE ELEMENTS Mg, S, B, Cu, Fe, Mn, Mo, AND Zn. FERTILIZER GRANULES SHALL BE COMPOSED OF DRY NUTRIENTS ENCAPSULATED IN MULTIPLE LAYERS OF POLYMERIC RESIN.

FOR INSTALLATION OF SOD, FERTILIZER IS ASSUMED TO BE CONTROLLED RELEASE FERTILIZER WITH A 16-4-8 ANALYSIS.

SOURCE FOR N SHALL BE RESIN-COATED UREA OR RESIN COATED AMMONIUM SALTS. MN, Zn, AND Cu SHALL BE SULFATE FORMS. Fe SHALL BE GRANULAR CHELATED IRON.

APPLICATION RATES ARE PROVIDED AS RECOMMENDATIONS ONLY. IT IS THE CONTRACTORS RESPONSIBILITY TO PROVIDE APPROPRIATE FERTILIZER/ AMENDMENTS TO ENSURE PROPER ESTABLISHMENT AND VIGOR OF PLANT MATERIAL.

1.0 OZ PER EA 1 GALLON PLANT CONTAINER	3.0 OZ PER EA 3 GALLON CONTAINER		9.0 OZ
PER EA 15 GALLON CONTAINER	48.0 OZ PER EA TREE	SOD AREAS: 6LBS/1000SF	

BIDDER NOTE:

LANDSCAPE/IRRIGATION CONTRACTOR SHALL PROVIDE A LINE ITEM LUMP SUM AMOUNT FOR THE WARRANTY MAINTENANCE WORK. THIS SHALL BE A STAND ALONE PRICE WHICH REFLECTS THE MORE FREQUENT VISITS REQUIRED FOR MOWING AND TRIMMING RATHER THAN SIMPLY A WARRANTY FOR REPLACEMENT OF DEFICIENCIES AT THE END OF THE FIRST YEAR.

SUGGESTED WARRANTY GUIDELINES FOR MAINTENANCE WORK:

THE FOLLOWING OPERATIONS SHALL BE PERFORMED BY THE CONTRACTOR DURING THE WARRANTY PERIOD. THE WARRANTY PERIOD SHALL BE 1 YEAR FROM DATE OF FINAL PROJECT COMPLETION. NOTE, SOME TASKS MAY NEED TO BEGIN UPON GROUNDBREAKING. CONTRACTOR SHALL ASSUME RESPONSIBILITY FOR THE PROPER MAINTENANCE, SURVIVAL, AND CONDITION OF ALL NEWLY INSTALLED LANDSCAPE ITEMS UNDER THIS CONTRACT. THE INFORMATION BELOW OUTLINES THE VARIOUS ACTIVITIES:

1. MOWING
MOWING OF ALL NEWLY PLANTED SOD SHALL BE PERFORMED THROUGHOUT THE WARRANTY PERIOD. AT A MINIMUM, MOW WEEKLY APRIL THROUGH SEPTEMBER AND MONTHLY OCTOBER THROUGH MARCH. CONTRACTOR SHALL MOW ALL NEWLY PLANTED TURFGRASS AREAS AND/OR PERENNIAL PEANUT, AS WELL AS A 6 FT AREA AROUND ALL PLANTING BEDS.

2. FERTILIZER
APPLY ONCE TO TREES, SHRUBS AND GROUNDCOVERS DURING THE WARRANTY PERIOD AND TWICE TO SOD OR PERENNIAL PEANUT AREAS. SEE GENERAL NOTES FOR APPLICATION RATES. APPLY IN THE SPRING AND AUTUMN UNLESS OTHERWISE DIRECTED BY COUNTY REPRESENTATIVE.

3. EDGING
A. EDGING SHALL BE DONE ON A REGULAR BASIS. MONTHLY, TO COINCIDE WITH THE MAINTENANCE SCHEDULE. WHERE BEDS ABUT TURF OR ROADWAY, EDGE WITH A MECHANICAL EDGER. CARE SHALL BE TAKEN NOT TO SCAR CONCRETE OR OTHER HARDSCAPE SURFACES WITH EDGING EQUIPMENT. PLANT BEDS AND TREE RINGS INSTALLED UNDER THIS CONTRACT SHALL BE KEPT CLEAN AND WELL DEFINED IN ORDER TO PREVENT ENCROACHMENT BY TURFGRASSES AND/OR PERENNIAL PEANUT.

B. EDGING ALL TREE RINGS AND PLANTING BEDS AT EACH MAINTENANCE VISIT AS NEEDED TO PREVENT ENCROACHMENT OF PLANT MATERIAL INTO GROUNDCOVER AND ROADWAY AREAS.

4. WEEDING
WEEDING OF NEWLY PLANTED AREAS SHALL BE DONE MONTHLY AT A MINIMUM. WEEDS SHALL BE IMMEDIATELY REMOVED FROM PLANTING AREAS. WEED REMOVAL SHALL BE DONE MANUALLY (HAND PULLED) AND HERBICIDES MAY BE UTILIZED IN PROBLEM AREAS. APPLICATION OF HERBICIDES SHALL BE DONE WITH EXTREME CAUTION AS TO PREVENT ANY POTENTIAL DAMAGE TO THE LANDSCAPE ELEMENTS. A MINIMUM OF ONE PRE-EMERGENT HERBICIDE APPLICATION WILL BE REQUIRED. NO PERENNIAL WEED SEEDLINGS OR TINY WEEDS SHALL BE ALLOWED, THAT ARE VISIBLE TO THE EYE, WITHIN THE PERENNIAL PEANUT AREAS. VISUAL MONITORING IS CRITICAL AND HAND PULLING OF TAPROOT IS REQUIRED.

5. HERBICIDE/PESTICIDE
A. ALL PERSONNEL INVOLVED IN THE THE APPLICATION OF CHEMICALS ARE TO RECEIVE PROPER TRAINING AND FOLLOW THE OPERATING GUIDELINES PROVIDED BY THE FDOT FOR CHEMICAL CONTROL. CONTACT THE LOCAL COUNTY AGRICULTURAL EXTENSION SERVICE FOR ADDITIONAL INFORMATION REGARDING HERBICIDE, PESTICIDE AND REQUIRED LICENSES.
B. ANY INVASIVE, EXOTIC SPECIES (PER FLORIDA EXOTIC PEST PLANT COUNCIL CAT. 1 & 2 LISTS) FOUND DURING THE MAINTENANCE PERIOD SHALL BE REMOVED.
C. PROVIDE PLANT MATERIAL INSECT AND DISEASE CONTROL INSPECTIONS CONTINUALLY DURING THE WARRANTY PERIOD AND TREAT AS NECESSARY.

6. PRUNING
A. SELECTIVE PLANT PRUNING (HAND PRUNING, NOT SHEARING) SHALL BE THE PRIMARY METHOD OF SHAPE AND SIZE CONTROL AND SHALL BE PERFORMED AS NECESSARY ON ALL TREES AND SHRUBS TO ENSURE THE HEALTH AND VIGOR THROUGHOUT THE WARRANTY PERIOD.
B. CRAPE MYRTLE TREES MAY BE TIP PRUNED DURING THE GROWING SEASON (CUTS THROUGH SMALLER DIAMETER BRANCHES 1 YEAR OLD OR LESS) POLLARDING (ANNUAL REMOVAL OF ALL SPROUTS) AND TOPPING (REMOVAL OF LARGE DIAMETER WOOD) ARE NOT ACCEPTABLE PRUNING METHODS.
C. NATIVE GRASSES SHALL BE CUT BACK IN EARLY MARCH AS NEEDED TO MAINTAIN A NEAT APPEARANCE.

7. MULCH
INSTALLED MULCH SHALL BE FRESH LONGLEAF OR SLASH PINESTRAW MULCH ONLY, APPLIED CONTINUOUSLY THROUGHOUT PLANTING BEDS. MAINTAIN MULCH RINGS EQUAL IN DIAMETER TO PLANTING FOR TREES; MIN. 6' CIRCLE IN OPEN GRASS AREAS AND 42"-48" MIN IN PARKING ISLANDS. SUPPLEMENT ALL MULCHING AS NECESSARY TO MAINTAIN A 3" COMPRESSED DEPTH THROUGHOUT THE WARRANTY PERIOD.

8. SPECIAL CARE REQUIREMENTS
PROTECT ANY HARDSCAPE ELEMENTS DURING WARRANTY ACTIVITIES FROM DAMAGE. ENSURE AREAS ADJACENT TO MAINTENANCE ACTIVITIES ARE CLEANED AND SWEPT AFTER MAINTENANCE WORK IS ACCOMPLISHED AT EACH MAINTENANCE VISIT. USE APPROVED BMP'S FOR PROTECTION OF ALL INLETS FROM SEDIMENTATION AND DEBRIS.

9. LITTER PICK-UP
DURING THE WARRANTY PERIOD, ENSURE LITTER PICKUP IS PERFORMED WITHIN NEWLY PLANTED AREAS AT EACH MAINTENANCE VISIT.

10. IRRIGATION
A. REVIEW IRRIGATION SYSTEM IN OPERATION AT EACH MAINTENANCE VISIT. IMMEDIATELY REPAIR ANY ITEMS THAT ARE NOT PERFORMING PROPERLY.
B. REVIEW ZONE TIMING CONTROL AT EACH MAINTENANCE VISIT AND ADJUST WATERING SCHEDULE AS NEEDED.
C. CONTRACTOR SHALL INCLUDE ALL COSTS ASSOCIATED WITH MAINTAINING A FULLY FUNCTIONING IRRIGATION SYSTEM INCLUDING, BUT NOT LIMITED TO THE REPLACEMENT OF HEADS, POLYPIPE AND/OR PVC PIPE. CONTRACTOR IS NOT RESPONSIBLE FOR ANY OBVIOUS DAMAGES CAUSED BY VEHICLE, OWNER OR MOTHER NATURE DURING THE WARRANTY PERIOD.

11. WORK ZONE CONTROL PLAN
APPROVED TRAFFIC CONTROL MEASURES SHALL BE UTILIZED DURING ALL MAINTENANCE ACTIVITIES.

12. STAKING
A. CONTRACTOR SHALL MAINTAIN ALL TREE STAKING DURING THE WARRANTY PERIOD.
B. CONTRACTOR SHALL REMOVE ALL ABOVE GROUND STAKING AT THE END OF ONE YEAR.

13. EARTH SAUCERS TO RETAIN WATER
REMOVE, GRADE SMOOTH, AND RE-MULCH AT THE END OF ONE YEAR.

14. PLANT/TREE REPLACEMENT
A. TREES: EXCEPT FOR OBVIOUS POOR OR SUB-STANDARD FLORIDA #1 GRADE AT FINAL ACCEPTANCE, THE CONTRACTOR IS NOT EXPECTED TO REPLACE ANY GIVEN TREE OR TREES AT THEIR OWN EXPENSE MORE THAN *ONCE.
B. SHRUBS AND GROUNDCOVERS: CONTRACTOR IS NOT EXPECTED TO REPLACE ANY GIVEN SHRUB OR GROUNDCOVER SPECIES MORE THAN *TWICE AT THEIR OWN EXPENSE.
C. PRIOR TO ANY REPLACEMENTS BEYOND *LIMITS, A FIELD REVIEW SHALL BE CONDUCTED BY THE R.L.A. OR OWNER'S REPRESENTATIVE TO ASSESS CAUSE OF MORTALITY TO ANY PARTICULAR SPECIES THAT HAS REACHED ITS REPLACEMENT *LIMIT.

UTILITY NOTES:

1. THE LOCATION OF UNDERGROUND FACILITIES SHOWN IN THE PLANS IS BASED UPON INFORMATION PROVIDED BY OTHERS AT THE TIME OF THE PLANS PREPARATION, LOCATIONS SHOWN ARE APPROXIMATE, AND THIS INFORMATION SHOULD NOT BE ASSUMED TO BE COMPREHENSIVE.

2. THE LOCATIONS OF THE OVERHEAD UTILITIES SHOWN ON THE PLANS ARE BASED ON LIMITED AVAILABLE INFORMATION AT THE TIME OF PLAN PREPARATION AND SHOULD BE CONSIDERED APPROXIMATE.

3. THE CONTRACTOR SHALL COORDINATE WITH GENERAL CONTRACTOR AND/OR ALL UTILITY COMPANIES (VIA SUNSHINE ONE CALL) PRIOR TO CONSTRUCTION AND NO UTILITY SHALL BE RELOCATED. RATHER, THE PROPOSED PLANTING LOCATIONS SHALL BE ADJUSTED TO ACCOMMODATE THE EXISTING UTILITY. THE OWNERS REPRESENTATIVE SHALL NEGOTIATE ANY UTILITY CONFLICTS.

4. THE LANDSCAPE CONTRACTOR SHALL VERIFY AND MAINTAIN THE VISIBLE LOCATION OF ALL UTILITIES DURING CONSTRUCTION. ALL EXCAVATION WITHIN 5 FT. OF UTILITIES SHALL BE DONE BY HAND. MAINTAIN SURFACE MARKINGS, FLAGS, ETC. OF UTILITY LOCATIONS, RE-LOCATE IF NEEDED. RECORD ACCURATELY ON AS-BUILT DRAWINGS WHEN NEAR PROJECT COMPONENTS.

File Path: T:\Projects\ICE18DESTINAIR\L1.0 LANDSCAPE PLANS.dwg Date: 2/28/2019 11:07 PM

FLY VPS
DESTIN - FORT WALTON BEACH AIRPORT

OKALOOSA COUNTY

INFRASTRUCTURE CONSULTING & ENGINEERING
5560 WEST IDLEWILD AVE. SUITE 102
TAMPA, FLORIDA 33634 (813) 330-2701
CERTIFICATE OF AUTHORIZATION NO : 30862

Project Name:
CONSTRUCT WEST APRON EXPANSION AND INFRASTRUCTURE AT VPS

Designer:	Checked by:
AHC	BLB
Technician:	DHM Proj. No.:
	ICE18DESTINAIR

Engineer of Record:
DAVID H. MELVIN, INC.
Consulting Engineers

Notes:

REVISIONS

No.	Description	Date	By

Drawing Name:
GENERAL AND PLANTING NOTES

FAA A.I.P. Project No.:
3-12-0081-029-2018

FDOT Project No.:

Date:	Sheet Number:
FEB 2019	L5.0

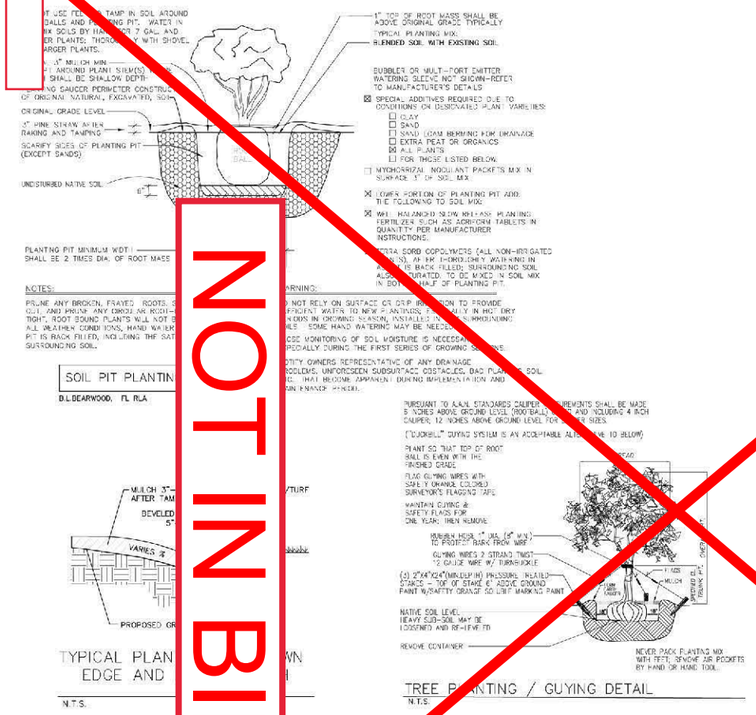

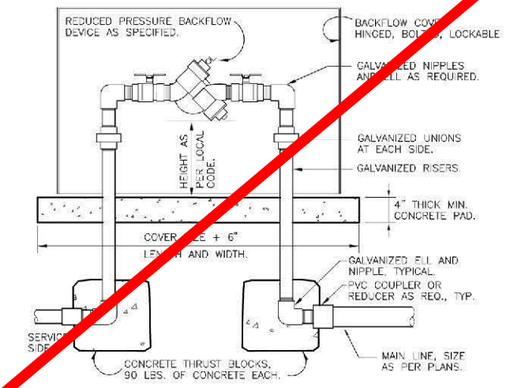

1 RP BACKFLOW W/ENCLOSURE
1" = 1'-0" FX-IR-FX-BACK-06

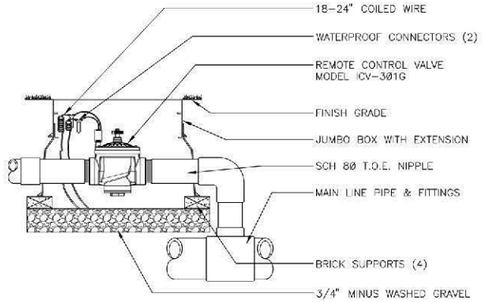

2 ICV 3" GLOBE VALVE WITHOUT ACCU-SYNC
1" = 1'-0" FX-IR-HUNT-VALV-29

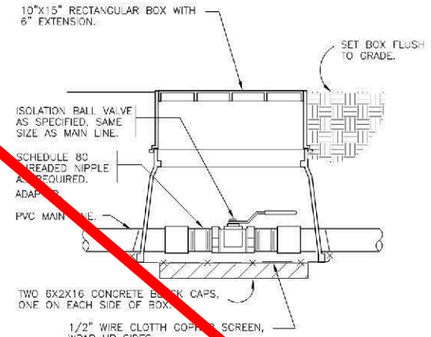

3 BRASS BALL ISOLATION VALVE
1 1/2" = 1'-0" FX-IR-FX-ISOV-02

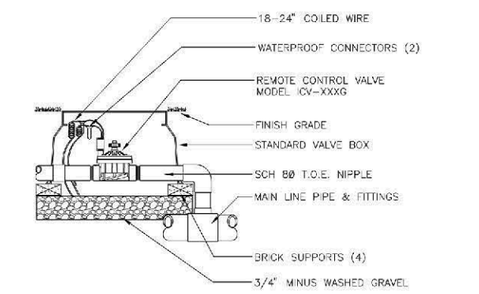

4 ICV GLOBE VALVE
1" = 1'-0" FX-IR-HUNT-VALV-20

Hunter®

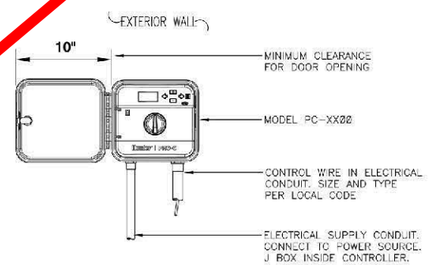

NOTE
SPECIFY 4, 7, 10, 13, 16 STATION MODEL CONTROLLER. MOUNT CONTROLLER WITH LCD SCREEN AT EYE LEVEL. CONTROLLER SHALL BE HARD-WIRED TO GROUNDED 110 VAC SOURCE.

5 PRO-C CONTROLLER
1 1/2" = 1'-0" FX-IR-HUNT-CONT-25

*When using larger GPM nozzles, beware of high friction loss in swing joints.

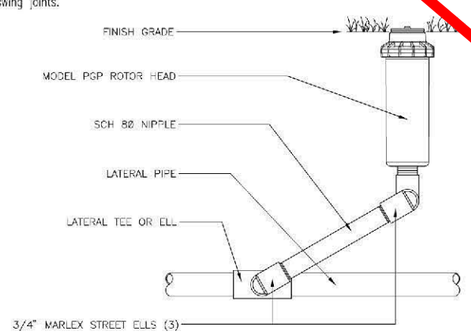

OPTIONS:
☐R = FACTORY INSTALLED RECLAIMED RUBBER COVER
☐CV = FACTORY INSTALLED DRAIN CHECK VALVE

6 PGP ROTOR HEAD WITH 3/4" MARLEX STREET ELLS
3" = 1'-0" FX-IR-HUNT-ROTR-20

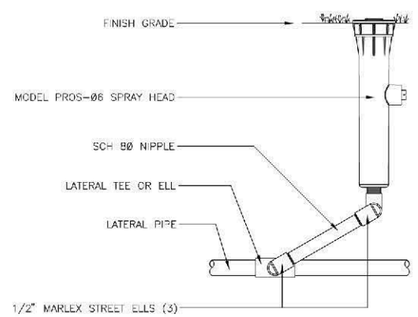

7 PROS-06 SPRAY HEAD WITH MARLEX STREET ELLS
3" = 1'-0" FX-IR-HUNT-SPRA-30

NOT IN BID

File Path: T:\Projects\ICE18DESTINAIRL1.0 LANDSCAPE PLANS.dwg Date: 2/28/2019 1:06 PM

FLY VPS
DESTIN - FORT WALTON BEACH AIRPORT

OKALOOSA COUNTY

INFRASTRUCTURE CONSULTING & ENGINEERING
5560 WEST IDLEWILD AVE. SUITE 102
TAMPA, FLORIDA 33634 (813) 330-2701
CERTIFICATE OF AUTHORIZATION NO : 30662

Project Name:
CONSTRUCT WEST APRON EXPANSION AND INFRASTRUCTURE AT VPS

Designer:	Checked by:
AHC	BLB
Technician:	DHM Proj. No.:
	ICE18DESTINAIR

Engineer of Record:
DAVID H. MELVIN, INC.
Consulting Engineers

Notes:

REVISIONS

No.	Description	Date	By

Drawing Name:
PLANTING & IRRIGATION DETAILS

FAA A.I.P. Project No.:
3-12-0081-029-2018

FDOT Project No.:

Date:	Sheet Number:
FEB 2019	L6.0

NOT IN BID

IRRIGATION NOTES AN ONS

1. SCOPE OF WORK:
THE WORK INCLUDED IN THESE CONSIST OF THE FURNISHING OF ALL LABOR, TOOLS, MATERIALS, APPLIANCES, TEST, PER FOR THE INSTALLATION OF AN AUTOMATIC ELECTRIC CONTROL IRRIGATION SYSTEM AT/NE ION, ISOLATION VALVE, PRESSURE REDUCER VALVE, FURNISH SLEEVING, BACKFLOW PREV STAL MOUNT CONTROLLER AND ALL NECESSARY IRRIGATION COMPONENTS, AS SHOWN ATION SYSTEM REQUIRES 61 PSI AND 63GPM. DOWNSTREAM OF CURB STOP OR M WATER TAP (POC) AND DOWNSTREAM FROM BACKFLOW.

2. VERIFICATION:
A. THE CONTRACTOR SHALL VERIFY LOCAL MUNICIPALITY REQUIREMENTS REGARDING THE LOCATION, SIZE, AND PRESSURE GATION SYSTEM.
B. THE CONTRACTOR FINDING ANY LANDSCAPE AND IRRIGATION PLANS DURING BIDDING AND/OR PRIOR TO PROCEEDING L NOTIFY THE OWNER'S AUTHORIZED REPRESENTATIVE OF SUCH DISCREPANCIES. OTHER N MUST ASSUME FULL RESPONSIBILITY FOR ANY AND ALL NECESSARY REVISIONS RELA
C. ALL LOCAL, MUNICIPAL AND STA REGULATIONS GOVERNING OR RELATING TO ANY PORTION OF THIS WORK ARE HE ITO AND MADE A PART OF THESE SPECIFICATIONS AND THEIR PROVISIONS SHALL E IRRIGATION CONTRACTOR.
D. ALL WORK AND MATERIALS NEC TIONAL AUTOMATIC ELECTRIC CONTROL IRRIGATION SYSTEM, SHALL BE FURNISHED R OR NOT SPECIFICALLY MENTIONED IN THE PLANS, SPECIFICATION AND/OR DETAILS.

3. SITE CONDITIONS:
A. THE CONTRACTOR SHALL EXAMIN PE OF WORK, SITE CONTEMPLATED, THE LANDSCA PLANS, SPECIFICATIONS AND AL CUMENTS. IT WILL BE ASSUMED THAT THE CONTRACTOR HAS INVESTIGATED TO THE CONDITIONS TO BE ENCOUNTERED AND PERFORM AND PROVIDE MATERIA

4. TRENCHING:
A. TRENCHES FOR PLASTIC PIPE SH M EARTH COVER OF 18" ABOVE THE TOP OF THE PIPE FOR ALL MAINLINE. INSTAL R WIRE. INSTALL LATERAL LINE 12" DEEP

5. PRESSURE TESTING:
A. ALL MAINLINES IN THE SYSTEM PRESSURE TESTED BEFORE ANY CONCEALED COMPONENTS ARE COVERED OVE OTHER CONNECTIONS ARE TO BE CLOSED DURING THE TEST. THE MAINLINES SHALL BE HOURS AT 135 PSI. TESTING SHALL BE OBSERVED BY OWNERS REPRESENTATIVE.

B. THE CONTRACTOR SHALL NOT A OF HIS WORK TO BE COVERED OR ENCLOSED UNTIL IT HAS BEEN INSPECTED, TESTE HE OWNER'S REPRESENTATIV

6. COVERAGE TEST:
A. WHEN THE SPRINKLER SYSTEM I TRACTOR, IN THE PRESENCE OF THE OWNER'S AUTHORIZED REPRESENTATIVE, S COVERAGE OF WATER AFFORDED THE LAWN AND PLANTING AREAS COMPLETE AN CIRCUMSTANCES SHALL OVERSPRAY OCCUR ON ANY PAVED SURFACE. THE CON H ALL MATERIALS AND PERFORM ALL WORK REQUIRED TO CORRECT ANY INADEQUACIES OWN COST. SEE PERFORMANCE STANDARDS BELOW.

7. IRRIGATION CONTROLLER (TO BE ACE CONTRACTOR.
A. THE CONTROLLER LOCATION SH CHEMATIC LOCATION.
B. 120 VOLT SERVICE AND HOOK-U ALL BE PROVIDED BY OWNER.
C. FURNISH AND INSTALL ALL COM /230V POWER SUPPLY), INCLUDING ELECTRICAL CONDUIT STUB-OUT AND PULL STUB-OUTS WITH ORANGE PAINT.
D. COORDINATE THE SPECIFIC LOCA NCING FOR NEW POWER SOURCE AND WWATER SUPPLY STUB-OUT.

8. VALVE PITS:
A. VALVE PITS OR BOXES MUST PROVIDE AMPLE ROOM FOR AND WORK AROUND SIDES AND EDGES, AND MUST BE SECURELY PROTECTED FROM SAND/SOIL SEDIMENTATION WITHIN VALVE PIT. SECURE WITH DUCT TAPE AND 6 MIL FILTER CLOTH. USE A MIN 6" LAYER OF PEA GRAVEL UNDER THE VALVE WITH A MIN 2" CLEARANCE UNDER THE VALVE BUT ABOVE THE PEA GRAVEL. ALL SHALL BE ENCLOSED WITH THE FILTER FABRIC. COMPACT SOIL IMMEDIATELY AROUND THE VALVE PITS TO FIRM AND UNYIELDING TO THE DEPTH OF THE FILTER CLOTH. A MIN 15" DIA VALVE PIT SHALL BE TYPICAL FOR (1) VALVE. DO NOT CROWD VALVES IF INSTALLED IN RECTANGULAR VALVE BOXES.

9. VALVE CONTROL WIRE:
A. ALL COMMON GROUND WIRE SHALL BE WHITE #14 COPPER MIN. SPARE COMMON (MAIN) WIRE SHALL BE BLUE COLORED.
B. RED SHALL BE USED ON POSITIVE WIRE FOR EACH VALVE.
C. FOR WIRE SIZE REFER TO THE MANUFACTURER'S CHART.
D. NO WIRES ARE TO BE SPLICED BETWEEN VALVE AND CONTROLLER EXCEPT AT VALVE LOCATIONS.
E. ALL VALVE HOOK-UPS SHALL BE DBY 3M WATERPROOF CONNECTORS.
F. INSTALL MINIMUM ONE EXTRA COMMON WHITE AND TWO EXTRA YELLOW VALVE WIRES TO EACH RUN TO VALVE GROUPINGS. PROVIDE MIN. 24" 30" COILS EXTRA WIRING FOR EACH VALVE, INCLUDING EXTRA WIRES, IN NEATLY FORMED COILS. FIT WITHIN THE VALVE BOXES.

10. VALVE TAGS:
A. DURABLE, YELLOW PLASTIC, IRRIGATION VALVE TAGS ARE REQUIRED FOR ALL ELECTRIC SOLENOID VALVE PIT COVERS, WITH IDENTIFICATION AND MAINLINE BALL VALVE SHUT-OFF PIT COVERS.

B. 1.50" ENGRAVED PLASTIC TAGS, UV STABLE, 1/16" THICK MIN. 3 LINES TEXT, MIN. ONE SIDE. SECURE WITH ADD-PEEL AND STICK LABEL, OR HOLE AND NO. 14. MIN. GAGE WIRE. Source: JHarbold@graphicproducts.com

C. BALL VALVES SHALL BE CLEARLY NUMBERED ON AS-BUILT DRAWINGS BY CONTRACTOR AS FOLLOWS BV-0X

11. IRRIGATION HEADS:
A. ALL HEADS SHALL BE MOUNTED FLUSH WITH FINISHED GRADE. INSTALL ROTOR HEADS 6" OFF ALL SIDEWALKS AND PAVEMENT AND SPRAY HEADS 3"-4" OFF OF ALL HARDSCAPE SURFACES.

12. CLEAN-UP:
A. UPON THE COMPLETION OF ALL IRRIGATION WORK, AND BEFORE FINAL ACCEPTANCE, THE CONTRACTOR SHALL REMOVE ALL MATERIAL, EQUIPMENT, AND DEBRIS RESULTING FROM HIS WORK. ALL PAVED AREAS SHALL BE BROOM CLEANED AND THE SITE LEFT IN A NEAT AND ACCEPTABLE CONDITION AS APPROVED BY THE OWNER'S AUTHORIZED REPRESENTATIVE.

13. PAVEMENT SLEEVING-CROSSINGS:
A. REFER TO IRRIGATION PLANS FOR LOCATIONS OF 4" & 6" SCHEDULE 40 PVC SLEEVING LOCATIONS AND COORDINATE WITH WITH OWNER OR OWNER'S REPRESENTATIVE TO ENSURE STUB-OUTS ARE SECURED IF PERFORMED BY SITE CONTRACTOR OR OTHERS.

14. IRRIGATION COVERAGE PERFORMANCE STANDARDS:
A. 100% COVERAGE IRRIGATION SYSTEM IS REQUIRED FOR ALL LANDSCAPE AREAS. THEREFORE, AN AUTOMATIC IRRIGATION SYSTEM, SHALL BE PROVIDED TO PROMOTE THE SURVIVAL OF ALL NEW PLANT MATERIAL AND TURFGRASS AREAS. TURFGRASS AREAS REQUIRE A MIN. DOUBLE COVERAGE (OVERLAPPING HEADS) AND MIN. SINGLE SPRAY COVERAGE FOR SHRUBS AND GROUNDCOVERS. RLA RESERVES THE RIGHT TO DIRECT COVERAGE CORRECTIONS UPON SUBSTANTIAL AND FINAL COMPLETION INSPECTIONS.

15. WORK TO BE PROVIDED BY OWNER:
A. COORDINATE WITH LANDSCAPE/IRRIGATION CONTRACTOR IN RESPONSE TO REQUESTS FOR APPROVALS OF LOCATIONS OF MAJOR COMPONENTS SUCH AS ELECTRICAL SERVICE AND P.O.C. LOCATION AND SLEEVING LOCATIONS. PROPOSED LOCATION OF STUB-OUT FOR IRRIGATION SUPPLY IS LOCATED IN AN EXISTING PARKING ISLAND ADJACENT TO AN EXISTING HYDRANT.
B. COORDINATE/APPROVE SEQUENCING OF MAJOR PROJECT TASKS IN RESPONSE TO REQUESTS BY CONTRACTOR.
C. PROVIDE AND COORDINATE WITH POWER COMPANY FOR LOCATIONS FOR ELECTRICAL SERVICE TO PROPOSED IRRIGATION CONTROLLER. (24V)

File Path: C:\Projects\ICE18DESTINAIRL1.0 LANDSCAPE PLANS.dwg Date: 2/26/2019 1:05 PM

FLY VPS

DESTIN - FORT WALTON BEACH AIRPORT

OKALOOSA COUNTY

INFRASTRUCTURE CONSULTING & ENGINEERING
5550 WEST IDLEWILD AVE. SUITE 102
TAMPA, FLORIDA 33634 (813) 330-2701
CERTIFICATE OF AUTHORIZATION NO.: 30862

Project Name:
CONSTRUCT WEST APRON EXPANSION AND INFRASTRUCTURE AT VPS

Designer:	Checked by:
AHC	BLB
Technician:	DHM Proj. No.:
	ICE18DESTINAIR

Engineer of Record:
DAVID H. MELVIN, INC.
Consulting Engineers

Notes:

REVISIONS

No.	Description	Date	By

Drawing Name:
IRRIGATION NOTES & SPECIFICATIONS

FAA A.I.P. Project No.:
3-12-0081-029-2018

FDOT Project No.:

Date:	Sheet Number:
FEB 2019	L7.0

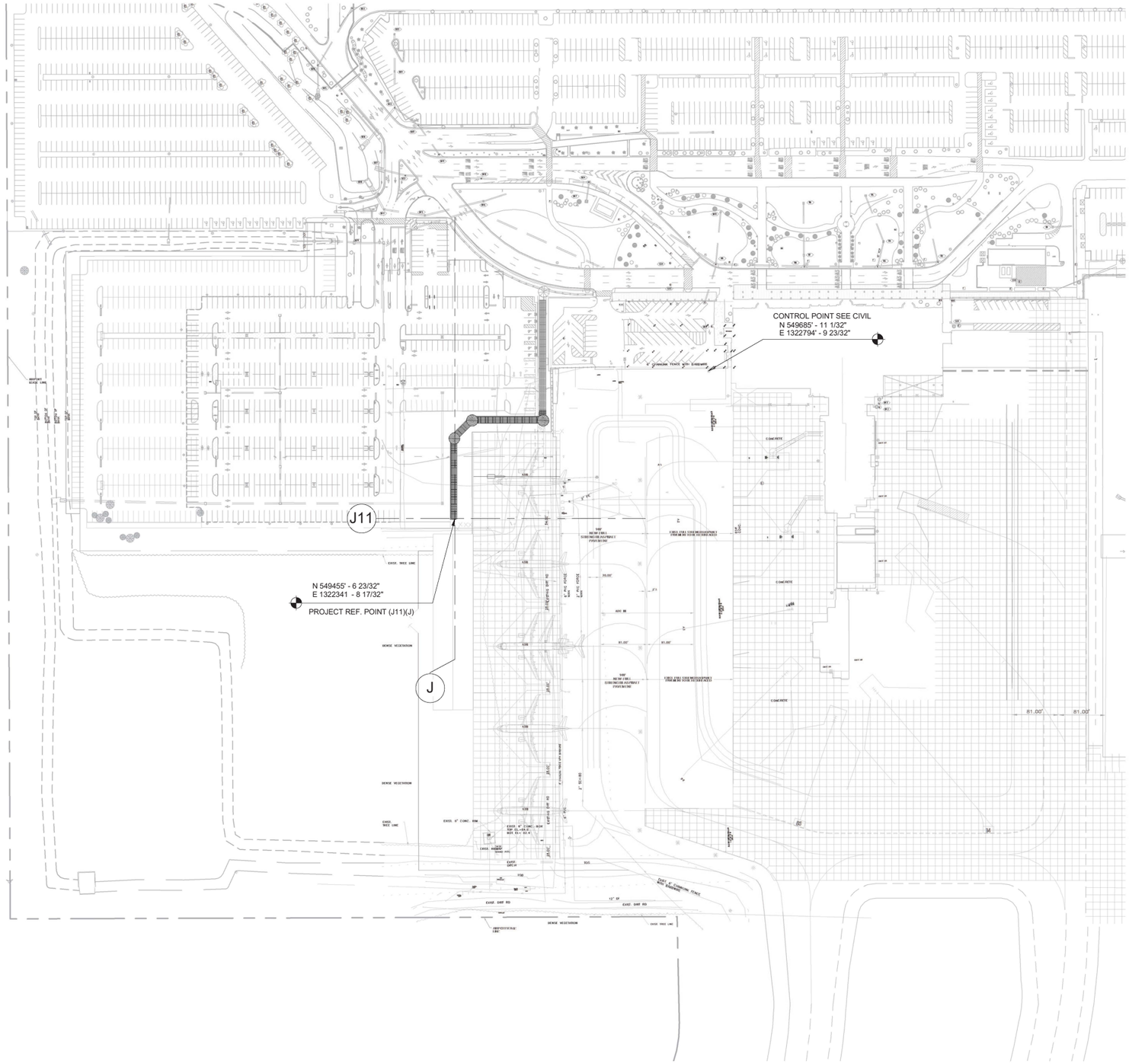

A1 SITE PLAN

1" = 100'-0"

0 25' 50' 100' 200'

1" = 100'

TRUE NORTH

NORTH

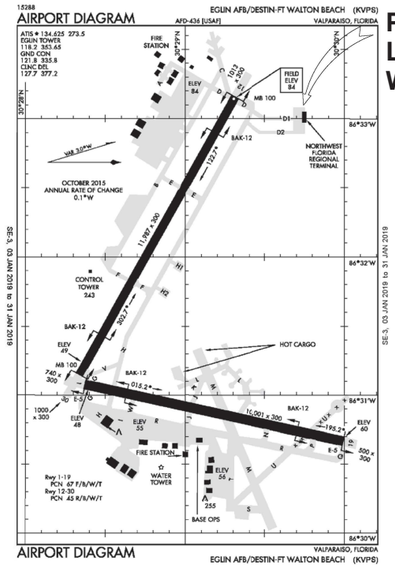

PROJECT LOCATION WEST RAMP

SHEET INDEX

SHEET	TITLE	REV
G001	PROJECT LOCATION INFORMATION	
G101	NOTES	
G102	KEYNOTE INDEX	
AD100	ARCHITECTURAL DEMOLITION PLAN	
A100	ARCHITECTURAL PLAN	
A102	TOP OF CANOPY PLAN	
A401	FOUNDATION PLAN	
A501	CANOPY ELEVATIONS	
A801	MAIN CANOPY PLAN DETAILS	
A802	MAIN CANOPY SECTION DETAILS	
A811	UMBRELLA CANOPY PLAN DETAILS	
A812	UMBRELLA CANOPY SECTION DETAILS	
A831	CANOPY FOUNDATION DETAILS	
A832	CANOPY CONNECTONS	
A833	WALKWAY DETAILS	

FLY VPS

DESTIN - FORT WALTON BEACH AIRPORT

OKALOOSA COUNTY

INFRA CONSULT
5550 WEST IDLEWILD AVE. SUITE 102
TAMPA, FLORIDA 33634 (813) 330-2710
CERTIFICATE OF AUTHORIZATION NO.:30862

CONSTRUCT WEST APRON EXPANSION AND INFRASTRUCTURE AT VPS

Designer:	Checked by:
MAM	MAM MLM
Technician:	MLM Proj. No.
DM ST MAM	18670

Architect of Record:

Miguel Antonio Martin
AR98279

MLM-MARTIN ARCHITECTS, INC.
668 N. Orlando Avenue 407.897.6764 ph
Suite 107 407.894.1538 fax
Maitland, FL 32751 www.mlm-martin.com

REVISIONS

NO.	DESCRIPTION	DATE	BY

Drawing Name:
PROJECT LOCATION INFORMATION

FAA A.I.P. Project No.:
3-12-0081-029-2018

FDOT Project No.:

Date:	Sheet Number:
MAY-2019	G001

SYMBOL LEGEND

CALLOUT REFERENCE

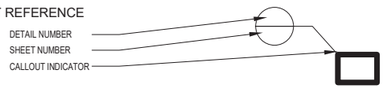

ELEVATION / SECTION REFERENCE

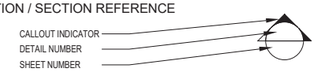

INTERIOR ELEVATION REFERENCE

PHOTO / 3D VIEW REFERENCE

NORTH ARROW

EXTRA ROOM ROOM MARKER

DOOR MARKER

PARTITION TYPE

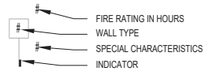

WINDOW / LOUVER MARKER

FF&E MARKER

MATERIAL MARKER

ACCESSORY MARKER

KEYNOTE MARKER

COLUMN LINE

ELEVATION MARKER

PATTERN STARTING POINT

DOCUMENT MODIFICATION MARKER
"DELTA" OR CHANGE NUMBER

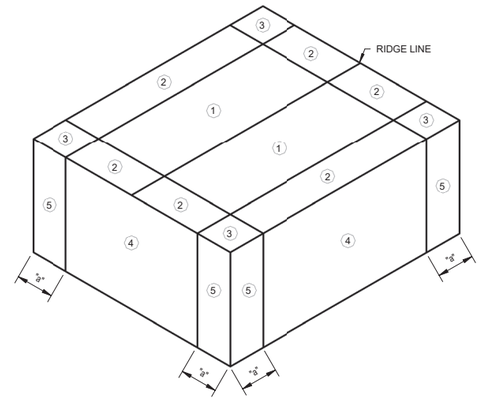

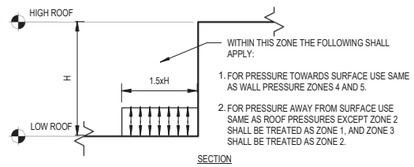

SECTION

ROOF STEP - COMPONENTS AND CLADDING
ROOF WIND PRESSURE ZONE DESIGNATIONS

GENERAL

ALL DESIGN, CONSTRUCTION AND INSPECTION SHALL BE IN CONFORMANCE WITH THE LATEST EDITION OF THE FLORIDA BUILDING CODE.

THE CONTRACTOR SHALL VERIFY ALL DIMENSIONS AND CONDITIONS AT THE SITE.

ALL OMISSIONS OR CONFLICTS BETWEEN THE VARIOUS ELEMENTS OF THE WORKING DRAWINGS AND/OR SPECIFICATIONS SHALL BE BROUGHT TO THE ATTENTION OF THE ARCHITECT AND/OR STRUCTURAL ENGINEER BEFORE PROCEEDING WITH ANY WORK INVOLVED.

CONTRACTOR SHALL BE RESPONSIBLE FOR SAFETY AND PROTECTION WITHIN AND ADJACENT TO THE JOB SITE.

TEMPORARY SHORING AND BRACING SHALL BE PROVIDED WHEREVER NECESSARY TO TAKE CARE OF ALL LOADS TO WHICH THE STRUCTURE MAY BE SUBJECTED INCLUDING WIND. SUCH BRACING SHALL BE LEFT IN PLACE AS LONG AS MAY BE REQUIRED FOR SAFETY OR UNTIL ALL THE STRUCTURAL ELEMENTS ARE COMPLETE.

DURING AND AFTER CONSTRUCTION THE CONTRACTOR AND/OR OWNER SHALL KEEP LOADS ON THE STRUCTURE WITHIN THE LIMITS OF THE DESIGN LOADS.

THE GENERAL CONTRACTOR SHALL HAVE SHOP DRAWINGS REVIEWED BY THE ARCHITECT PRIOR TO THE FABRICATION OR ERECTION FOR THE FOLLOWING ITEMS: REINFORCING STEEL AND STRUCTURAL STEEL.

ALL DETAILS, SECTIONS, AND NOTES ARE INTENDED TO BE TYPICAL AND SHALL APPLY TO SIMILAR SITUATIONS UNLESS NOTED OR SHOWN OTHERWISE.

OBSERVATION VISITS TO THE JOB SITE BY FIELD REPRESENTATIVES OF THE ENGINEER SHALL NEITHER BE CONSTRUED AS INSPECTION NOR APPROVAL OF CONSTRUCTION.

ALL UTILITIES SHALL BE LOCATED BEFORE DIGGING.

FOOTINGS

ALL FOOTINGS SHALL BEAR 18" MINIMUM INTO ORIGINAL UNDISTURBED EARTH OR ON ENGINEERED FILL COMPACTED TO 95% OF MODIFIED DENSITY. SUCH FILL SHALL BE PLACED IN LAYERS NOT TO EXCEED 6" IN DEPTH AFTER COMPACTION AND SHALL EXTEND DOWN TO IN-SITU GRANULAR SOILS.

FOOTING ELEVATIONS SHOWN ON DRAWINGS ARE MINIMUM DEPTH. DIFFERENT OR UNUSUAL CONDITIONS SHALL BE REPORTED TO THE ARCHITECT AND/OR ENGINEER.

NO FOOTINGS SHALL BE PLACED IN WATER OR ON FROZEN GROUND.

ANY SOIL CONDITION ENCOUNTERED DURING EXCAVATION THAT IS CONTRARY TO THE CONDITIONS USED FOR DESGN OF FOOTINGS AS OUTLINED IN THESE NOTES OR ON THE DRAWINGS SHALL BE BROUGHT TO THE ATTENTION OF THE ARCHITECT BEFORE PROCEEDING. THE FOOTINGS WERE DESIGNED FO AN ALLOWABLE BEARING PRESSURE OF 1500 PSF.

ALL FOOTING EXCAVATIONS SHALL BE EXAMINED FOR VERIFICATION OF ADEQUATE BEARING CONDITIONS BEFORE PLACING CONCRETE. UNSUITABLE CONDITIONS SHALL BE REPORTED TO ARCHITECT BEFORE PROCEEDING.

CONCRETE

CONCRETE SHALL ATTAIN THE FOLLOWING MINIMUM COMPRESSIVE STRENGTHS AT 28 DAYS:
ALL CONCRETE .....3000 PSI

A STATEMENT OF MIX DESIGN FOR ALL CONCRETE SHALL BE SUBMITTED TO AND REVIEWED BY THE STRUCTURAL ENGINEER PRIOR TO COMMENCING WORK.

ALL CONCRETE WORK SHALL BE PLACED, CURED, STRIPPED, AND PROTECTED AS DIRECTED BY THE SPECIFICATIONS AND ACI STANDARDS AND PRACTICES.

DOWEL VERTICAL BARS 36 DIAMETERS INTO STRUCTURE ABOVE AND FOOTINGS BELOW. PROVIDE 90 DEG. HOOK WHERE 36 DIAMETER IS NOT POSSIBLE.

BEFORE CONCRETE IS POURED CHECK WITH ALL TRADES TO ENSURE PROPER PLACEMENT OF ALL OPENINGS, SLEEVES, CURBS, CONDUITS, BOLTS, INSERTS, ETC. RELATIVE TO WORK.

WHERE EXTERIOR SLABS ON GRADE ABUT WALLS OR COLUMNS PROVIDE 3/8" PREFORMED EXPANSION JOINT FILLER WITH SEALANT.

REINFORCING STEEL

ALL REINFORCEMENT SHALL BE DETAILED AND PLACED IN ACCORDANCE WITH ACI DETAILING MANUAL 315-92 AND ACI STANDARD 318-95.

REINFORCING STEEL SHALL BE ASTM A615 GRADE 60.

WELDED WIRE FABRIC SHAL. CONFORM TO ASTM A185. LAP ONE MESH TIE.

ALL REINFORCEMENT SHALL BE SECURELY TIED AND HELD IN PLACE.

REINFORCING BARS THAT ARE TO BE WELDED, INCLUDING DEFORMED BAR ANCHORS (D.B.A.) SHALL BE OF A WLDABLE GRADE AND SHALL BE WELDED IN ACCORDANCE WITH THE A.W.S. RECOMMENDATIONS.

ALL CONTINUOUS REINFORCEMENT SHALL TERMINATE WITH A 90 DEG. TURN OR A SEPARATE CORNER BAR. ALL SPLICES SHALL LAP A MINIMUM OF 36 BAR DIAMETERS (12" MINIMUM) IN CONCRETE, AND 48 DIAMETERS IN MASONRY.

WHERE THE LENGTH OF A BAR IS GIVEN AND IT IS TO BE HOOKED, THE HOOK SHALL BE IN ADDITION TO THE LENGTH GIVEN, UNLESS SHOWN OTHERWISE.

COVER TO MAIN REINFORCEMENT FROM ADJACENT SURFACES SHALL BE AS FOLLOWS UNLESS SHOWN OTHERWISE:
A. UNFORMED SURFACES IN CONTACT WITH GROUND OR EXPOSED TO THE WEATHER (BOTTOM OF FOOTINGS). . . . . 3 INCHES
B. SLABS ON GRADE . . . . . 2 INCHES
C. FORMED SURFACES IN CONTACT WITH THE GROUND OR EXPOSED TO THE WEATHER (GRADE BMS, WALLS, ETC.), BEAMS AND COLUMNS. . . . . 2 INCHES

STRUCTURAL STEEL & ALUMINUM

ALL STRUCTURAL STEEL AND STRUCTURAL STEEL WORK SHALL COMPLY WITH BOTH THE AISC "MANUAL OF STEEL CONSTRUCTION" CONTAINING THE SPECIFICATIONS FOR THE DESIGN, FABRICATION AND ERECTION OF STRUCTURAL STEEL BUILDINGS, INCLUDING THE "CODE OF STANDARD PRACTICES" (LATEST EDITION), AND WITH THE FLORIDA BUILDING CODE.

ALL WIDE FLANGE AND WT SECTIONS SHALL CONFORM TO ASTM A992, W/ YIELD STRENGTH OF 50 KSI.

STRUCTURAL STEEL TUBING SHALL CONFORM TO ASTM A500 GRADE B; YIELD STRESS = 46 KSI.

ALL STRUCTURAL STEEL NOT ENCASED IN CONCRETE SHALL BE FACTORY PRIMED AND FINISH PAINTED. APPLY TOUCH UP PAINT AFTER WELDING. SEE ARCH. FOR FINISH PAINT.

ALL OTHER STRUCTURAL STEEL SHALL BE ASTM A36, UNO.

ALUMINUM PURLINS SHALL HAVE A MINIMUM ALLOWABLE YIELD STRESS OF 35,000 PSI.

PRIOR TO FABRICATION AND ERECTION, SHOP DRAWINGS FOR ALL STEEL ITEMS SHALL BE REVIEWED BY THE STRUCTURAL ENGINEER. THE CONTRACTOR SHALL VERIFY ALL SHOP DRAWING DIMENSIONS WITH STRUCTURAL AND ARCHITECTURAL PLANS AND DETAILS.

ALL WELDS SHALL BE MADE WITH E70XX ELECTRODES WITH A CVN OF 20 FOOT-POUNDS AT -20 DEGREES F., AND BY WELDERS CERTIFIED BY AWS STANDARDS WITHIN THE PAST 12 MONTHS; PROVIDE WRITTEN CERTIFICATION IF REQUESTED.

STUD SHEAR CONNECTORS SHALL COMPLY WITH ASTM A 108-81.

STRUCTURAL DESIGN LOADS

WIND: BASIC WIND SPEED = 140 MPH, EXPOSURE "C".

SOILS: NET ALLOWABLE SOIL PRESSURE = 1500 PSF, ASSUMED.

ROOF: LL = 20 PSF

CODE ANALYSIS

Project Name:
WEST APRON EXPANSION CANOPY MODIFICATIONS, DESTIN-FORT WALTON BEACH AIRPORT

Project Description:
Demolition of portions (192 approx. linear feet) of an existing canopy system. Addition of approx. 300 linear feet of new canopy to match existing systems.

Florida Building Code Building -6th Edition (2017)
Florida Building Code Accessibility -6th Edition (2017)
Florida Fire Prevention Code -6th Edition
NFPA 1, Uniform Fire Code, 2015 with Florida modifications
NFPA 70, 2014 Edition, National Electrical Code
NFPA 101, Life Safety Code, 2015 with Florida Modification
AISC Manual of Steel Construction and Code of Standard Practices Latest edition

All areas are Exterior, non enclosed.

COLUMN LINE MARKERS

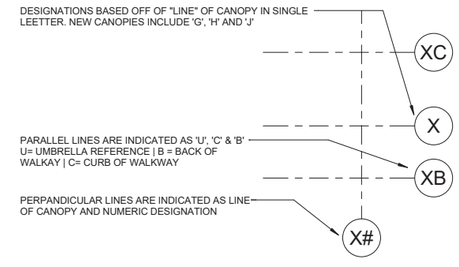

MATERIAL LEGEND

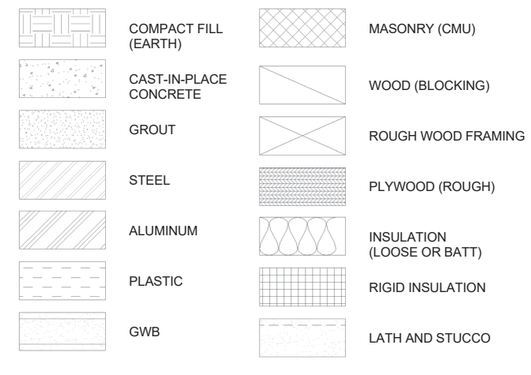

DESIGN WIND PRESSURE FOR EXTERIOR COMPONENTS AND CLADDING MATERIALS

ROOF SLOPE	SURFACE	EFFECTIVE WIND AREA (SF)	WIND PRESSURE TOWARD SURFACE (+ PSF)	WIND PRESSURE AWAY FROM SURFACE (- PSF)
>0° TO 7°	ZONE 1 ROOF	10	24.1	59.3
		20	22.6	57.7
		50	20.6	55.7
		100	19.1	54.2
	ZONE 2 ROOF EDGES	10	24.1	99.4
		20	22.6	88.8
		50	20.6	74.9
		100	19.1	64.3
	ZONE 3 ROOF CORNERS	10	24.1	99.4
		20	22.6	88.8
		50	20.6	74.9
		100	19.1	64.3
NA	ZONE 4 WALL	10	54.2	58.7
		20	51.8	56.3
		50	48.7	53.2
		100	46.2	50.8
		500	40.7	45.2
	ZONE 5 WALL CORNERS	10	54.2	72.3
		20	51.8	67.5
		50	48.7	61.1
		100	46.2	56.3
		500	40.7	45.2

COMPONENTS AND CLADDING WIND PRESSURE NOTES:

1. THE COMPONENTS AND CLADDING WIND LOAD PRESSURES IN THE TABLES ABOVE ARE BASED ON ASCE 7-2010. THE WIND PRESSURES ARE ULTIMATE LOAD PRESSURES. REFER TO THE GENERAL NOTES AND DESIGN DATA NOTES FOR WIND LOAD INFORMATION AND PARAMETERS.
2. THE PRESSURES IN THE TABLES ABOVE ARE TO BE USED FOR WIND LOAD CONTRIBUTION TO THE TOTAL LOAD APPLIED TO ANY COMPONENTS AND CLADDING MEMBER OR MATERIAL WHICH IS PART OF A ROOF OR EXTERIOR WALL ASSEMBLY.
3. REFER TO CHAPTER 16 OF THE FLORIDA BUILDING CODE AND ASCE 7-2010 FOR DEFINITION OF TERMS.
4. CONFIGURATION OF END ZONES, EDGE STRIPS AND CORNERS SHALL BE PER ASCE 7-2010.
5. INTERPOLATION FOR EFFECTIVE WIND AREA BETWEEN 10 SF AND 100 SF FOR ROOFS, AND 10 SF AND 500 SF FOR WALLS IS PERMITTED.
6. PRESSURES ARE APPLIED NORMAL TO THE SURFACE OF THE COMPONENT OR CLADDING ELEMENT.
7. POSITIVE AND NEGATIVE PRESSURES DO NOT ACT SIMULTANEOUSLY.
8. THE WIDTH OF EDGE STRIP (a) 8.8 FT.

FLY VPS

DESTIN - FORT WALTON BEACH AIRPORT

OKALOOSA COUNTY

INFRASTRUCTURE CONSULTING & ENGINEERING
5550 WEST IDLEWILD AVE. SUITE 102
TAMPA, FLORIDA 33634 (813) 330-2710
CERTIFICATE OF AUTHORIZATION NO.:30862

CONSTRUCT WEST APRON EXPANSION AND INFRASTRUCTURE AT VPS

Designer:	Checked by:
MAM	MAM MLM
Technician:	MLM Proj. No.
DM ST MAM	18670

Architect of Record:

Miguel Antonio Martin
AR98279

668 N
Suite 1
Maitla

REVISIONS

NO.	DESCRIPTION	DATE	BY

Drawing Name:
NOTES

FAA A.I.P. Project No.:
3-12-0081-029-2018

FDOT Project No.:

Date:	Sheet Number:
MAY-2019	G101

MASTER KEYNOTE LIST

NOTE	DESCRIPTION
03 21 00.54D2	TYP. (4) #5 DOWELS BETWEEN BLOCK AND BASE PLATE. (2) EACH SIDE. LEAN DOWELS INSIDE OF STIRRUPS.
03 21 00.58D0	TYP. (8) #5 DOWELS. LEAN DOWELS INSIDE OF STIRRUPS.
03 21 00.303C	TYP. #3 TIES @ TOP @ 12" OC.
03 21 00.400C	TYP. #4 STIRRUPS @ 12" OC.
03 21 00.509B	TYP. #5 CONCRETE REINFORCEMENT BARS TOP & BOTTOM, EACH WAY @12IN OC.
03 21 00.569B	TYP. (6) #5 CONCRETE REINFORCEMENT BARS TOP & BOTTOM, EACH WAY @12IN OC.
03 21 00.4004	TYP. #4 CONCRETE REINFORCEMENT BARS @ 24 IN. OC.
03 21 00.4200	TYP. (2) #4 CONCRETE REINFORCEMENT BARS.
03 21 00.5204	TYP. (2) #5 CONCRETE REINFORCEMENT BARS @ 24 IN. OC.
03 21 00.5400	TYP. (4) #5 CONCRETE REINFORCEMENT BARS.
03 22 30.66AA	6X6 - W1.4 X W1.4 WWF REINFORCEMENT.
03 31 71.I0AA	TYP. CAST-IN-PLACE 6' X 6' ISOLATED CONCRETE FOUNDATION, SEE STRUCTURAL.
03 31 71.I0FF	TYP. CAST-IN-PLACE 9' X 9' ISOLATED CONCRETE FOUNDATION, SEE STRUCTURAL.
03 31 71.P066	TYP. CAST-IN-PLACE 3' X 3' CONCRETE PIER, CAST AFTER COLUMN ADJUSTMENT.
03 31 71.W080	TYP. CAST-IN-PLACE 40" STRIP FOOTING.
04 05 13.0000	TYP. MASONRY MORTAR JOINT.
04 05 19.C0B3	TYP. GALV. CORRUGATED MASONRY ANCHORAGE TIES @ 16IN OC. BOTH WAYS
04 05 19.H003	TYP. CONT. HORIZONTAL MASONRY REINFORCEMENT @ 16IN OC.
04 05 23.1953	TYP. 1/4" 'V' GROVE CUT CONT. AROUND CAP STONE.
04 22 00.0008	TYP. 8" NOM. CONCRETE MASONRY UNIT.
04 22 23.53C4	TYP. 4" NOM. ARCHITECTURAL BURNISHED CORNER RETURN CONCRETE MASONRY UNIT.
04 22 23.53M4	TYP. 4" NOM. ARCHITECTURAL BURNISHED HALF BLOCK CONCRETE MASONRY UNIT.
04 22 23.5304	TYP. 4" NOM. ARCHITECTURAL BURNISHED CONCRETE MASONRY UNIT.
04 72 00.0004	TYP. CAST STONE CAP TO MATCH EXISTING, APPROX. 34" X12" X 4".
04 72 00.2719	TYP. CAST STONE CAP TO MATCH EXISTING, APPROX. 27.5" X 19.5" X 4".
05 05 12.1381	TYP. IN-SHOP CUT MEMBER STRAIGHT AS INDICATED PRIOR TO PRIMER APPLICATION.
05 05 12.1385	TYP. IN-SHOP CUT / NOTCH HSS MEMBER STRAIGHT TO ACCEPT WT WEB THICKNESS PRIOR TO PRIMER APPLICATION. CONT. FILLET WELD IN PLACE.
05 05 12.1387	TYP. IN-SHOP CORE PLATE FOR DRAINAGE AS INDICATED PRIOR TO PRIMER APPLICATION.
05 05 23.AG43	TYP. (4) 1" DIAM. ANCHOR BOLTS WITH 1/4X3X3 PL WASHER & NUT ON ANCHORBOLT W/ 10" EMBEDMENT.
05 05 23.AG83	TYP. (8) 1" DIAM. ANCHOR BOLTS WITH 1/4X3X3 PL WASHER & NUT ON ANCHORBOLT W/ 10" EMBEDMENT.
05 05 23.B820	TYP. 1/2" DIAM. STAINLESS STEEL THRU BOLTS W/ NEOPRENE WASHER BETWEEN SETEEL AND ALUMINUM.
05 05 23.B825	TYP. 1/2" DIAM. STAINLESS STEEL THRU BOLTS W/ NEOPRENE WASHER.

MASTER KEYNOTE LIST

NOTE	DESCRIPTION
05 05 23.LG00	TYP. 1" DIAM. LEVELING NUTS.
05 05 23.N4UP	TYP. 1/4" STEEL BENT PLATE SUPPORT "U" AT EACH BEAM & PURLIN INTERSECTION.
05 05 23.N8LB	TYP. 1/2" STEEL BENT PLATE SUPPORT ANGLE FOR BEAM ATTACHEMENT, CONT. SHOP WELD TO COLUMN PRIOR TO FINISH.
05 05 23.P5W0	TYP. 5/16" PLATE FULL WEIDTH OF WT FLANGE, CONT WELD ALONG EDGES.
05 05 23.P560	TYP. 5/16" X 6" PLATE, CONT WELD ALONG EDGES.
05 05 23.PA0B	TYP. 5/8" STEEL PLATE TOP AND BOTTOM.
05 05 23.PG44	TYP. 1" X 24" X 24" BASE PLATE ON 1 1/2" NON-SHRINK GROUT.
05 05 23.PGCE	TYP. 1" X 12" X 14" BASE PLATE ON 1 1/2" NON-SHRINK GROUT.
05 05 23.S832	TYP. 1/2" DIAM. X 3" HD. STUD WELDED ON (2) SIDES OF COLUMN @ 12" OC.
05 05 23.T6X0	TYP. 3/8" STIFFINER PLATE IN LINE W/BEAMES.
05 12 00.U703	TYP. HSS6.875X0.375 STRUCTURAL STEEL FRAMING.
05 12 13.H8C5	TYP. ARCHITECTURALLY EXPOSED HSS12X8X5/16 STRUCTURAL STEEL FRAMING, SEE STRUCTURAL.
05 12 13.H335	TYP. ARCHITECTURALLY EXPOSED HSS3X3X5/16 STRUCTURAL STEEL FRAMING, SEE STRUCTURAL.
05 12 13.H686	TYP. ARCHITECTURALLY EXPOSED HSS8X6X3/8 STRUCTURAL STEEL FRAMING, SEE STRUCTURAL.
05 12 13.TC42	TYP. ARCHITECTURALLY EXPOSED WT12X42 STRUCTURAL STEEL FRAMING, SEE STRUCTURAL.
05 12 13.UG03	TYP. ARCHITECTURALLY EXPOSED HSS16X0.375 STRUCTURAL STEEL FRAIMING, SEE STRUCTURAL.
05 14 13.1010	TYP. ARCHITECTURALLY EXPOSED 1"X1" STRUCTURAL ALUMINUM SPACER OVER PURLIN, SEE STRUCTURAL.
05 14 13.1515	TYP. ARCHITECTURALLY EXPOSED 1.5"X1.5" STRUCTURAL ALUMINUM "H" FRAMING, ATTACH TO PURLINS W/ #12 SS SCREWS @ 6" OC.
05 14 13.2545	TYP. ARCHITECTURALLY EXPOSED TS 4.5" X 2.5" X 3/16"STRUCTURAL ALUMINUM TUBE FRAMING, SEE STRUCTURAL.
07 13 26.G001	TYP. "PERM-A-BARRIER WALL MEBRANE" SELF-ADHEARING, RUBERIZED ASPHALT/POLYETHYLENE MEMBRANE SHEET WATERPROOFING OR APPROVED SUBSTITUTE. LAP MIN 4" ON TO POLY-CARB. SHEETING.
07 91 23.C400	TYP. 1/4" EXPANSION JOINT WITH CONT. SEALANT AND BACKER ROD WHERE COLUMN ABUTS CAST STONE, COLOR TO MATCH STONE.
07 91 23.C450	TYP. 1/4" CONT. SEALANT AND BACKER ROD AT CAST STONE JOINTS, COLOR TO MATCH STONE.
07 91 26.F8EJ	TYP. 1/2" FIBER EXPANSION JOINT FILLER WITH CONT. SEALANT, COLOR GREY.
07 91 26.F600	TYP. 3/8" FIBER EXPANSION JOINT FILLER WITH CONT. SEALANT WHERE COLUMN ABUTS WALK, COLOR GREY.
07 91 26.F800	TYP. 1/2" FIBER EXPANSION JOINT FILLER WITH CONT. SEALANT WHERE COLUMN ABUTS WALK, COLOR GREY.
07 92 00.0000	TYP. SEALANT CONT.

MASTER KEYNOTE LIST

NOTE	DESCRIPTION
07 92 00.265A	TYP. SEALANT CONT. FULL PERIMETER OF LIGHT FIXTURE, WHITE. PROVIDE 1/4" WEEP AT BOTTOM OF JOINT.
08 45 13.8000	TYP. 8MM MULTIWALL POLYCARBONATE PANEL (VEROLITE OPAL OR APPROVED SUBSTITUTION).
22 14 16.6050	TYP. 6" DIAM. ALUMINUM DOWNSPOUT, ROLL EDGE OF OUTLET MIN OF 1/2" BACK TO PREVENT KNIFE EDGE.
22 14 26.1369	TYP. 5" DIAM ROOF DRAIN W/ CASE ALUMINUM DOME. ROOFING CONTRACTOR TO PROVIDE SHOP DRAWINGS OF INSTALLATION.
26 56 33.WF33	TYP. EXTERIOR WALKWAY LIGHTING 10" SEMI-RECESSED WITH GLARE HOOD. "KIM LIGHTING WF33C/1863KUV/WH"
31 23 23.C090	TYP. 12" MIN. SUB-GRADE COMPACTED TO 95% AASHTO T-180.
32 05 16.2361	TYP. 1/2" SAW CUT TO 1-1/2" DEPTH CONTROL JOINT IN WALK WITH CONT. SEALANT, COLOR GREY.
32 05 16.2381	TYP. 1/2" EXPANSION JOINT IN WALK.
32 16 13.1300	TYP. CAST-IN-PLACE CONCRETE CURB, SEE CIVIL.
32 16 13.1500	
32 16 23.04D5	TYP. 4" X 120" WIDE BROOM FINISHED CONCRETE SIDEWALK.
32 16 23.0405	TYP. 4" THICK BROOM FINISHED CONCRETE WALK.

FLY VPS

DESTIN - FORT WALTON BEACH AIRPORT

OKALOOSA COUNTY

INFRASTRUCTURE CONSULTING & ENGINEERING
5550 WEST IDLEWILD AVE. SUITE 102
TAMPA, FLORIDA 33634 (813) 330-2710
CERTIFICATE OF AUTHORIZATION NO.:30862

CONSTRUCT WEST APRON EXPANSION AND INFRASTRUCTURE AT VPS

Designer:	Checked by:
MAM	MAM MLM
Technician:	MLM Proj. No.
DM ST MAM	18670

Architect of Record:

Miguel Antonio Martin
AR98279

MLM-MARTIN ARCHITECTS, INC.
668 N. Orlando Avenue 407.897.6764 ph
Suite 107 407.894.1338 fax
Maitland, FL 32751 www.mlm-martin.com

REVISIONS

NO.	DESCRIPTION	DATE	BY

Drawing Name:
KEYNOTE INDEX

FAA A.I.P. Project No.:
3-12-0081-029-2018

FDOT Project No.:

Date:	Sheet Number:
MAY-2019	G102

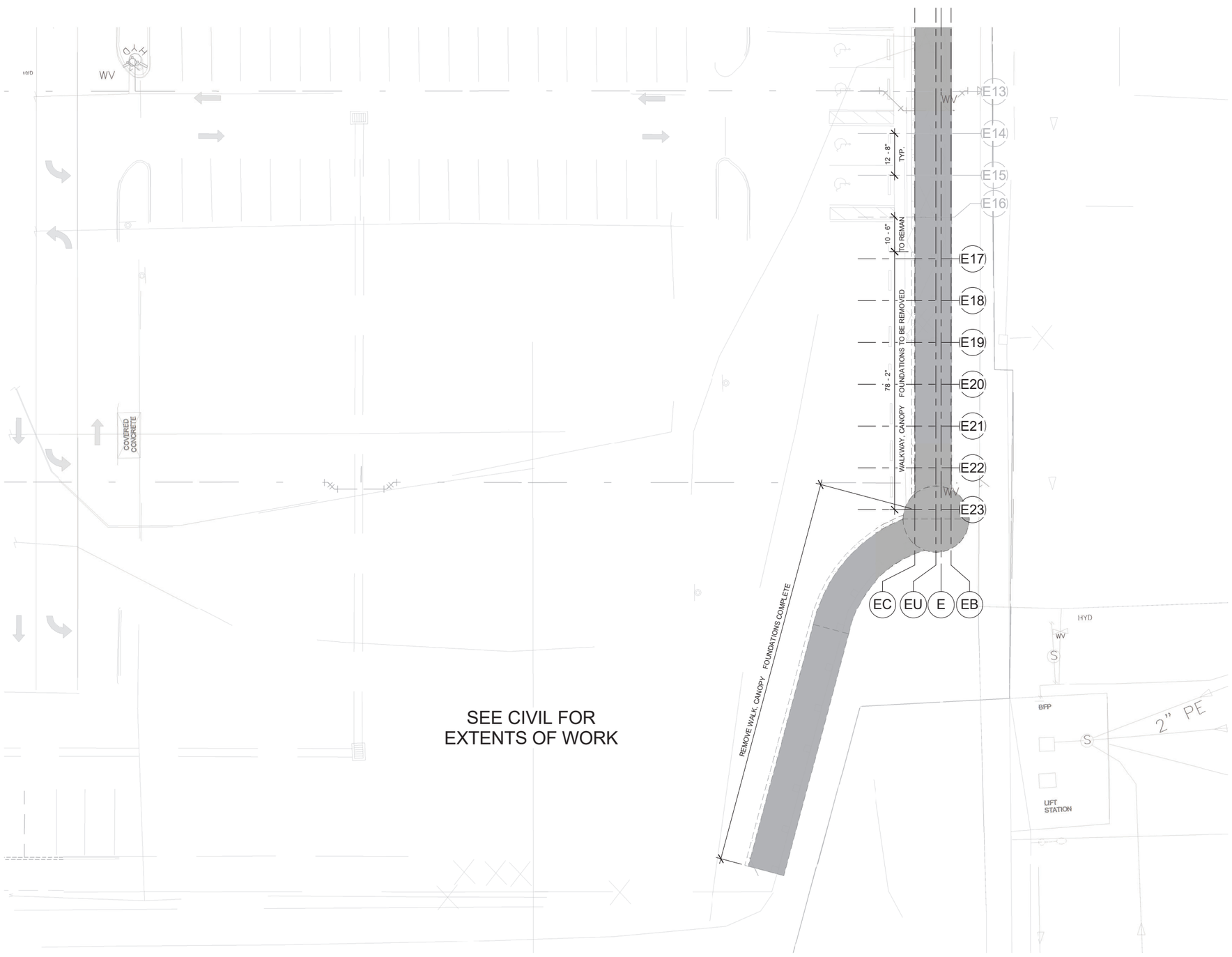

SEE CIVIL FOR
EXTENTS OF WORK

A1 LIMITS OF DEMOLITION

1/16" = 1'-0"

KEYNOTES

NO.	NOTATION

0 4' 8' 16' 32'

1/16" = 1'-0"

FLY VPS

DESTIN - FORT WALTON BEACH AIRPORT

OKALOOSA COUNTY

INFRASTRUCTURE
CONSULTING & ENGINEERING
5550 WEST IDLEWILD AVE. SUITE 102
TAMPA, FLORIDA 33634 (813) 330-2710
CERTIFICATE OF AUTHORIZATION NO.:30862

CONSTRUCT WEST APRON EXPANSION AND INFRASTRUCTURE AT VPS

Designer:	Checked by:
MAM	MAM MLM
Technician:	MLM Proj. No.
DM ST MAM	18670

Architect of Record:

Miguel Antonio Martin
AR98279

REVISIONS

NO.	DESCRIPTION	DATE	BY

Drawing Name:
ARCHITECTURAL DEMOLITION PLAN

FAA A.I.P. Project No.:
3-12-0081-029-2018

FDOT Project No.:

Date:	Sheet Number:
MAY-2019	AD100

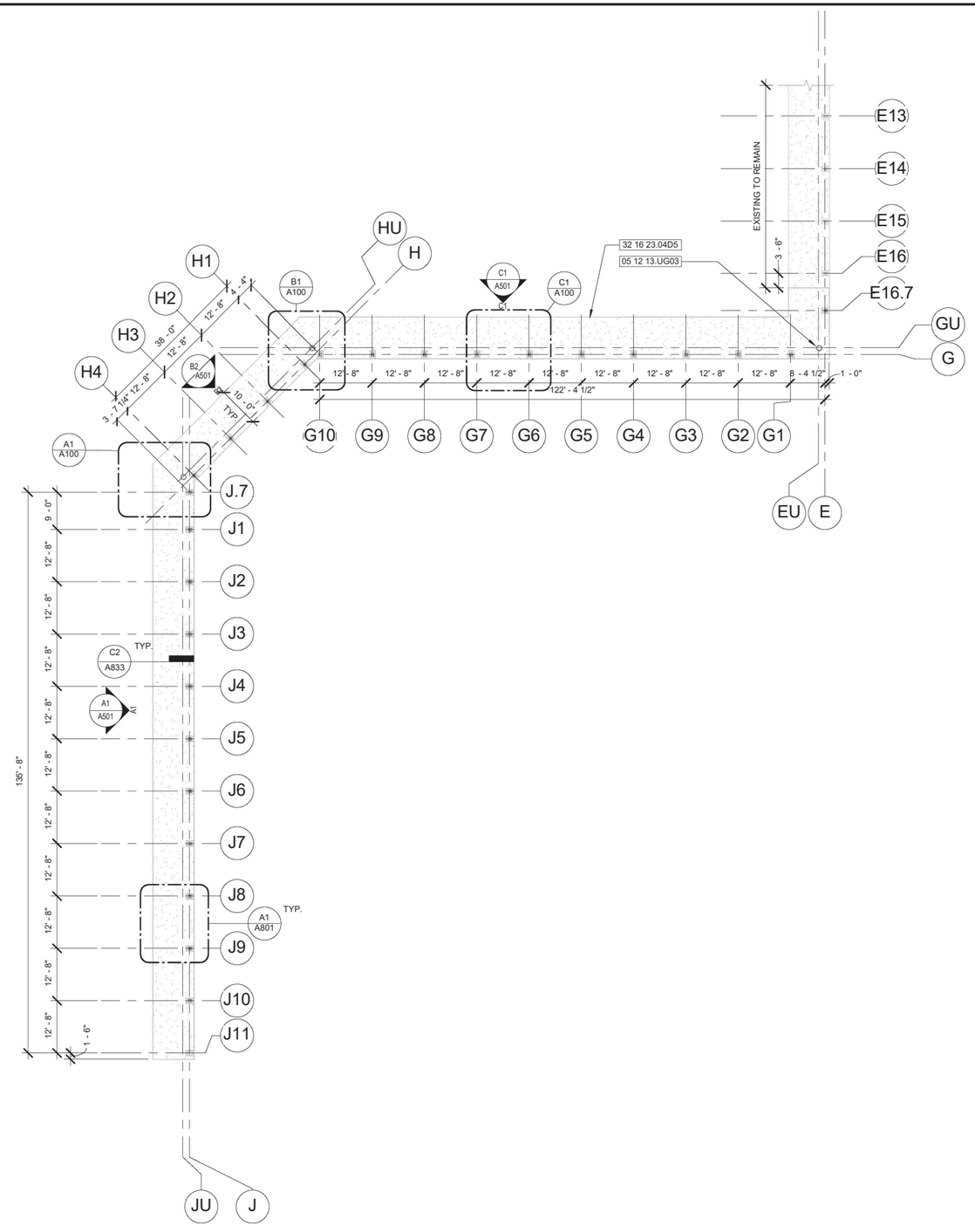

A2 TOP OF WALK

1/16" = 1'-0"

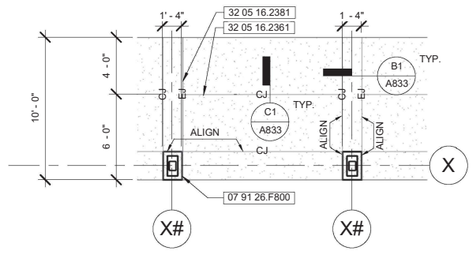

C1 TYP. JOINT PATTERN

3/16" = 1'-0"

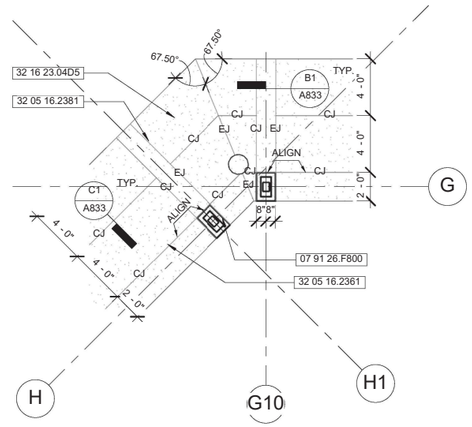

B1 G-H JOINT DETAIL

3/16" = 1'-0"

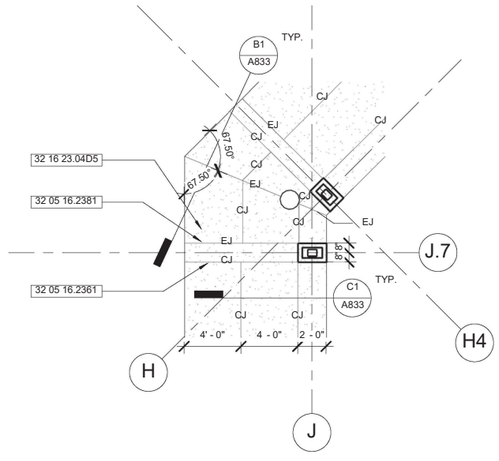

A1 H -J JOINT DETAIL

3/16" = 1'-0"

KEYNOTES

NO.	NOTATION
05 12 13.UG03	TYP. ARCHITECTURALLY EXPOSED HSS16X0.375 STRUCTURAL STEEL FRAIMING, SEE STRUCTURAL.
07 91 26.F800	TYP. 1/2" FIBER EXPANSION JOINT FILLER WITH CONT. SEALANT WHERE COLUMN ABUTS WALK, COLOR GREY.
32 05 16.2361	TYP. 1/2" SAW CUT TO 1-1/2" DEPTH CONTROL JOINT IN WALK WITH CONT. SEALANT, COLOR GREY.
32 05 16.2381	TYP. 1/2" EXPANSION JOINT IN WALK.
32 16 23.04D5	TYP. 4" X 120" WIDE BROOM FINISHED CONCRETE SIDEWALK.

0 2'-8" 5'-4" 10'-8"

3/16" = 1'-0"

0 4' 8' 16' 32'

1/16" = 1'-0"

FLY VPS

DESTIN - FORT WALTON BEACH AIRPORT

OKALOOSA COUNTY

INFRASTRUCTURE CONSULTING & ENGINEERING
5550 WEST IDLEWILD AVE. SUITE 102
TAMPA, FLORIDA 33634 (813) 330-2710
CERTIFICATE OF AUTHORIZATION NO.:30862

CONSTRUCT WEST APRON EXPANSION AND INFRASTRUCTURE AT VPS

Designer:	Checked by:
MAM	MAM MLM
Technician:	MLM Proj. No.
DM ST MAM	18670

Architect of Record:

Miguel Antonio Martin
AR98279

MLM-MARTIN ARCHITECTS, INC.
668 N. Orlando Avenue 407.897.6764 ph
Suite 107 407.894.1538 fax
Maitland, FL 32751 www.mlm-martin.com

REVISIONS

NO.	DESCRIPTION	DATE	BY

Drawing Name:

ARCHITECTURAL PLAN

FAA A.I.P. Project No.:

3-12-0081-029-2018

FDOT Project No.:

Date:	Sheet Number:
MAY-2019	A100

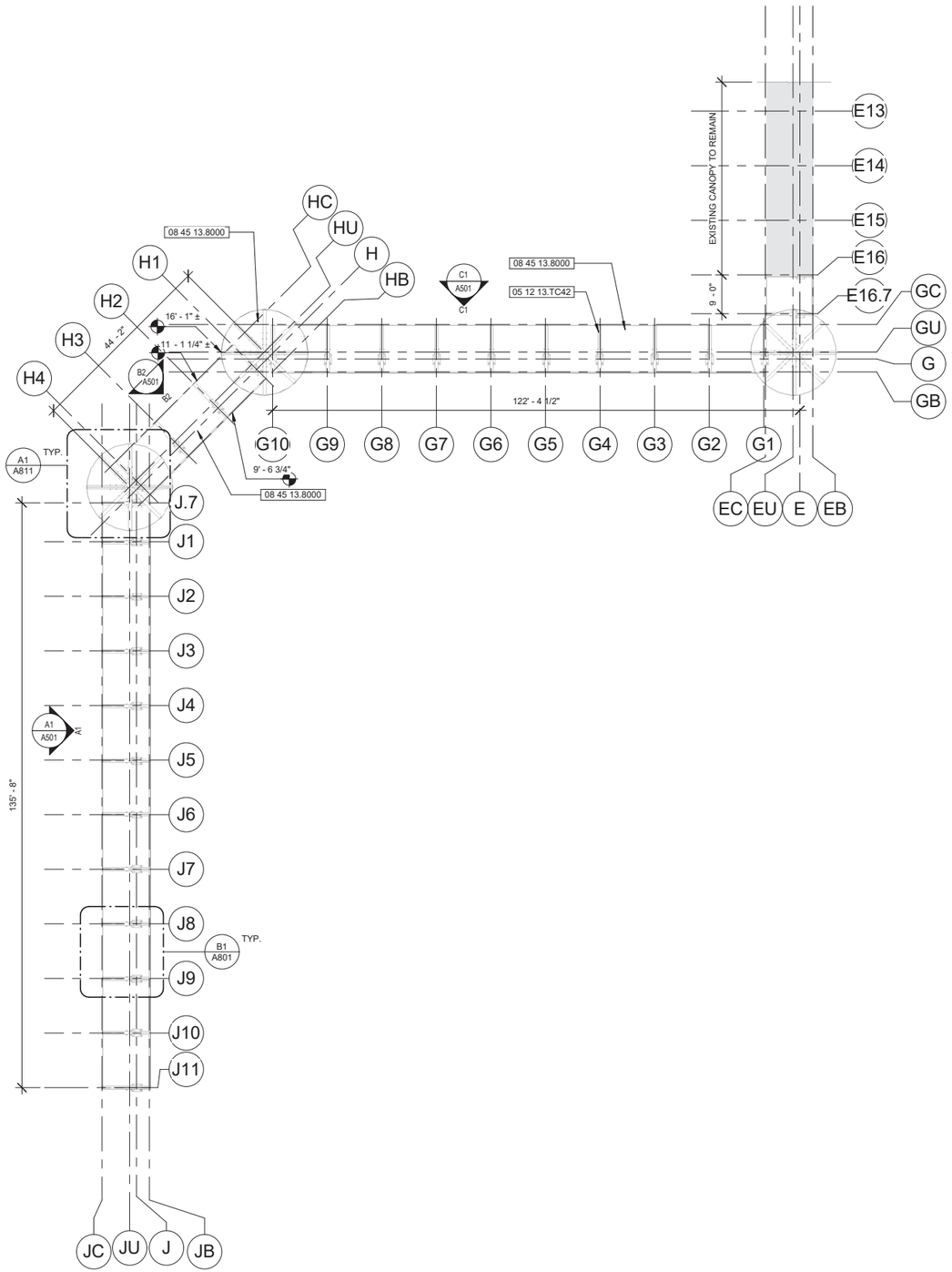

A2 TOP OF CANOPY

1/16" = 1'-0"

TRUE NORTH

NORTH

KEYNOTES

NO.	NOTATION
05 12 13.H8C5	TYP. ARCHITECTURALLY EXPOSED HSS12X8X5/16 STRUCTURAL STEEL FRAMING, SEE STRUCTURAL.
05 12 13.TC42	TYP. ARCHITECTURALLY EXPOSED WT12X42 STRUCTURAL STEEL FRAMING, SEE STRUCTURAL.
08 45 13.8000	TYP. 8MM MULTIWALL POLYCARBONATE PANEL (VEROLITE OPAL OR APPROVED SUBSTITUTION).

0 4' 8' 16' 32'

1/16" = 1'-0"

FLY VPS

DESTIN - FORT WALTON BEACH AIRPORT

OKALOOSA COUNTY

INFRASTRUCTURE CONSULTING & ENGINEERING

5550 WEST IDLEWILD AVE. SUITE 102
TAMPA, FLORIDA 33634 (813) 330-2710
CERTIFICATE OF AUTHORIZATION NO.:30862

CONSTRUCT WEST APRON EXPANSION AND INFRASTRUCTURE AT VPS

Designer:	Checked by:
MAM	MAM MLM
Technician:	MLM Proj. No.
DM ST MAM	18670

Architect of Record:

Miguel Antonio Martin
AR98279

MLM-MARTIN ARCHITECTS, INC.

668 N. Orlando Avenue 407.897.6764 ph
Suite 107 407.894.1338 fax
Maitland, FL 32751 www.mlm-martin.com

REVISIONS

NO.	DESCRIPTION	DATE	BY

Drawing Name:

TOP OF CANOPY PLAN

FAA A.I.P. Project No.:

3-12-0081-029-2018

FDOT Project No.:

Date:	Sheet Number:
MAY-2019	A102

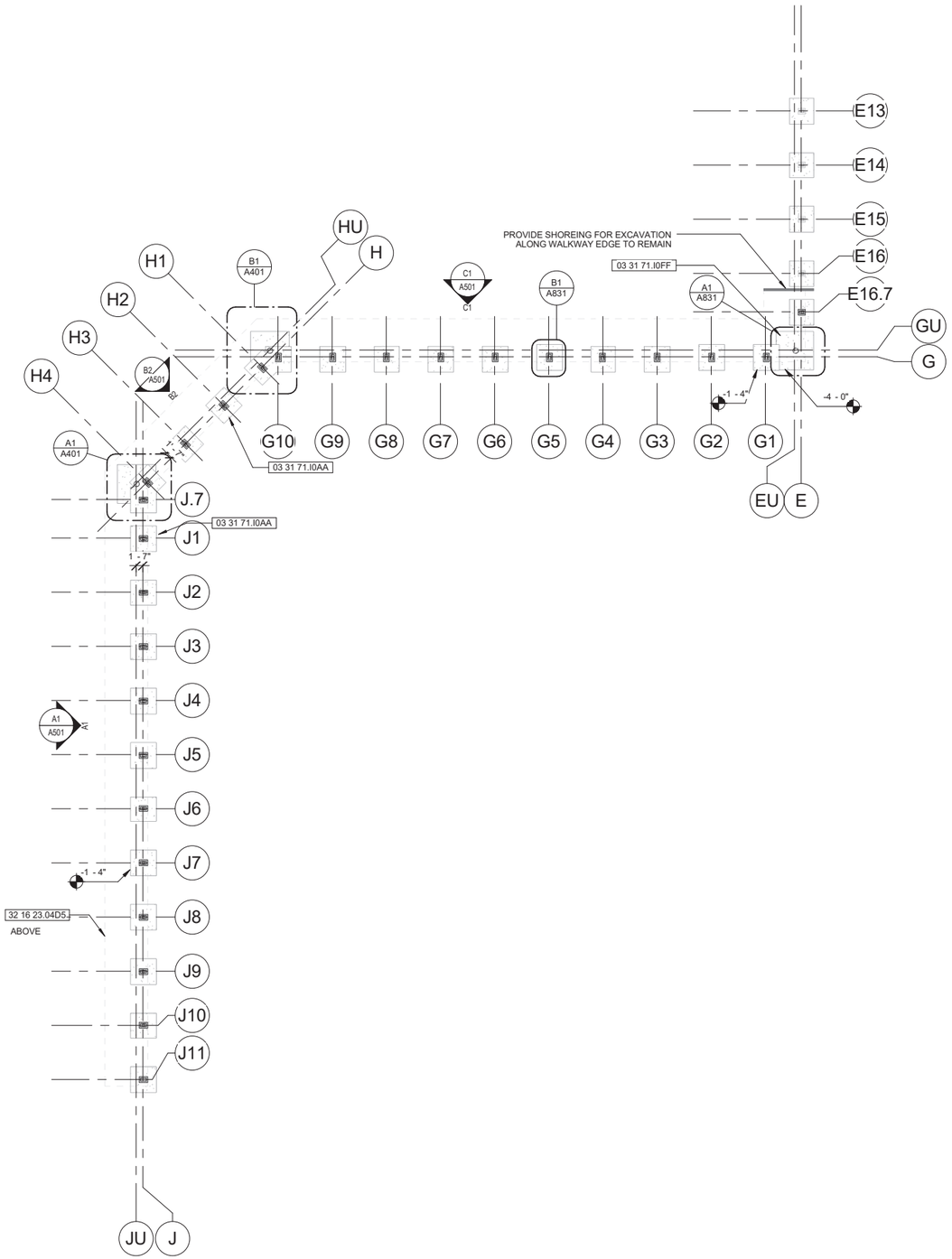

A2 TOP OF FOUNDATION

1/16" = 1'-0"

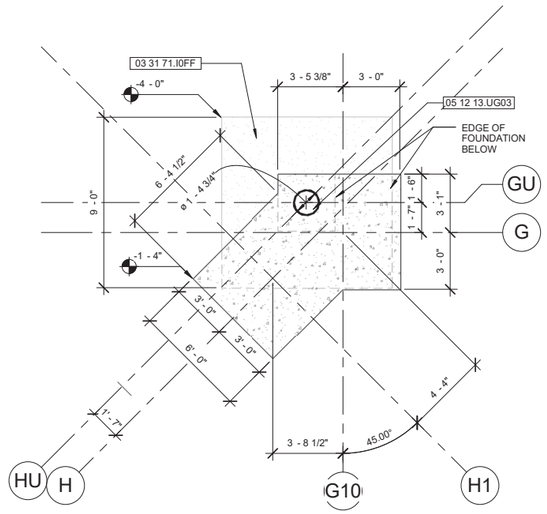

B1 G-H FOUNDATION

1/4" = 1'-0"

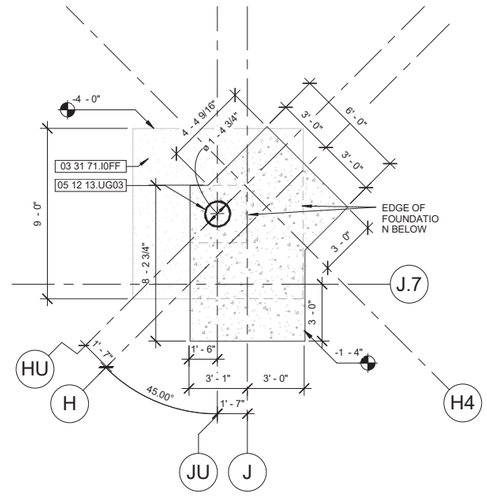

A1 H-J FOUNDATION

1/4" = 1'-0"

KEYNOTES

NO.	NOTATION
03 31 71.I0AA	TYP. CAST-IN-PLACE 6' X 6' ISOLATED CONCRETE FOUNDATION, SEE STRUCTURAL.
03 31 71.I0FF	TYP. CAST-IN-PLACE 9' X 9' ISOLATED CONCRETE FOUNDATION, SEE STRUCTURAL.
05 12 13.UG03	TYP. ARCHITECTURALLY EXPOSED HSS16X0.375 STRUCTURAL STEEL FRAIMING, SEE STRUCTURAL.
32 16 23.04D5	TYP. 4" X 120" WIDE BROOM FINISHED CONCRETE SIDEWALK.
32 16 23.0405	TYP. 4" THICK BROOM FINISHED CONCRETE WALK.

SOIL STATEMENT

FOR DESIGN PURPOSES, SOIL BEARING CAPACITY HAS BEEN ASSUMED AT 1500 PSF. IT IS RECOMMENDED THAT SOIL TESTING AND ANALYSIS BE PERFORMED PRIOR TO CONSTRUCTION

0 4' 8' 16' 32'

1/16" = 1'-0"

0 1' 2' 4' 8'

1/4" = 1'-0"

TRUE NORTH

NORTH

FLY VPS

DESTIN - FORT WALTON BEACH AIRPORT

OKALOOSA COUNTY

INFRASTRUCTURE CONSULTING & ENGINEERING
5550 WEST IDLEWILD AVE. SUITE 102
TAMPA, FLORIDA 33634 (813) 330-2710
CERTIFICATE OF AUTHORIZATION NO.:30862

CONSTRUCT WEST APRON EXPANSION AND INFRASTRUCTURE AT VPS

Designer:	Checked by:
MAM	MAM MLM
Technician:	MLM Proj. No.
DM ST MAM	18670

Architect of Record:

Miguel Antonio Martin
AR98279

MLM-MARTIN ARCHITECTS, INC.
668 N. Orlando Avenue 407.897.6764 ph
Suite 107 407.894.1338 fax
Maitland, FL 32751 www.mlm-martin.com

REVISIONS

NO.	DESCRIPTION	DATE	BY

Drawing Name:

FOUNDATION PLAN

FAA A.I.P. Project No.:

3-12-0081-029-2018

FDOT Project No.:

Date:	Sheet Number:
MAY-2019	A401

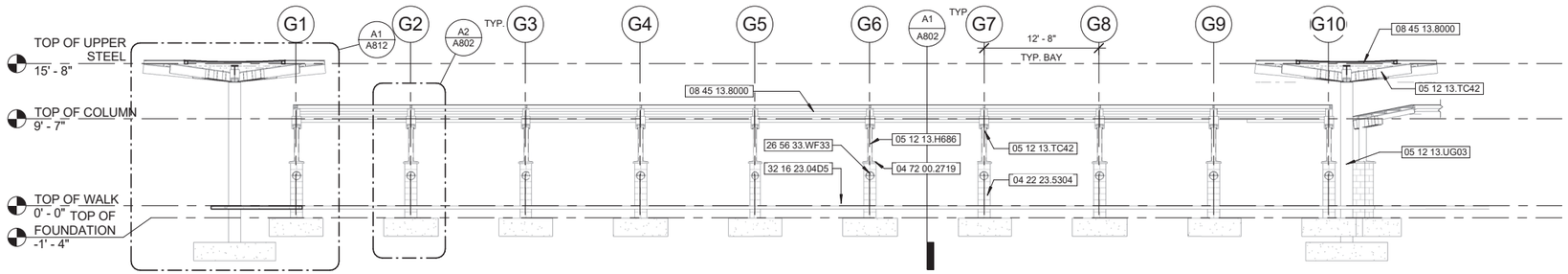

C1 'G' LINE ELEVATION

1/8" = 1'-0"

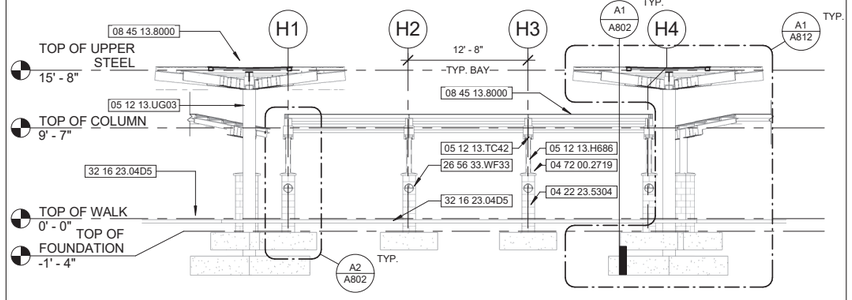

B2 'H' LINE ELEVATION

1/8" = 1'-0"

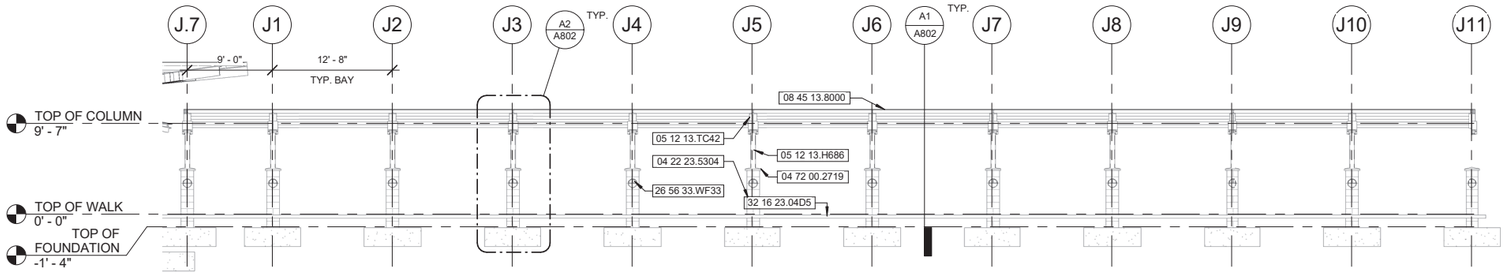

A1 'J' LINE ELEVATION

1/8" = 1'-0"

KEYNOTES

NO.	NOTATION
04 22 23.5304	TYP. 4" NOM. ARCHITECTURAL BURNISHED CONCRETE MASONRY UNIT.
04 72 00.2719	TYP. CAST STONE CAP TO MATCH EXISTING, APPROX. 27.5" X 19.5" X 4".
05 12 13.H8C5	TYP. ARCHITECTURALLY EXPOSED HSS12X8X5/16 STRUCTURAL STEEL FRAMING, SEE STRUCTURAL.
05 12 13.H686	TYP. ARCHITECTURALLY EXPOSED HSS8X6X3/8 STRUCTURAL STEEL FRAMING, SEE STRUCTURAL.
05 12 13.TC42	TYP. ARCHITECTURALLY EXPOSED WT12X42 STRUCTURAL STEEL FRAMING, SEE STRUCTURAL.
05 12 13.UG03	TYP. ARCHITECTURALLY EXPOSED HSS16X0.375 STRUCTURAL STEEL FRAIMING, SEE STRUCTURAL.
05 14 13.2545	TYP. ARCHITECTURALLY EXPOSED TS 4.5" X 2.5" X 3/16"STRUCTURAL ALUMINUM TUBE FRAMING, SEE STRUCTURAL.
08 45 13.8000	TYP. 8MM MULTIWALL POLYCARBONATE PANEL (VEROLITE OPAL OR APPROVED SUBSTITUTION).
26 56 33.WF33	TYP. EXTERIOR WALKWAY LIGHTING 10" SEMI-RECESSED WITH GLARE HOOD. "KIM LIGHTING WF33C/1863KUV/WH"
32 16 23.04D5	TYP. 4" X 120" WIDE BROOM FINISHED CONCRETE SIDEWALK.

0 2' 4' 8' 16'

1/8" = 1'-0"

FLY VPS

DESTIN - FORT WALTON BEACH AIRPORT

OKALOOSA COUNTY

INFRASTRUCTURE
CONSULTING & ENGINEERING
5550 WEST IDLEWILD AVE. SUITE 102
TAMPA, FLORIDA 33634 (813) 330-2710
CERTIFICATE OF AUTHORIZATION NO.:30862

CONSTRUCT WEST APRON EXPANSION AND INFRASTRUCTURE AT VPS

Designer:	Checked by:
MAM	MAM MLM
Technician:	MLM Proj. No.
DM ST MAM	18670

Architect of Record:

Miguel Antonio Martin
AR98279

REVISIONS

NO.	DESCRIPTION	DATE	BY

Drawing Name:
CANOPY ELEVATIONS

FAA A.I.P. Project No.:
3-12-0081-029-2018

FDOT Project No.:

Date: MAY-2019

Sheet Number: A501

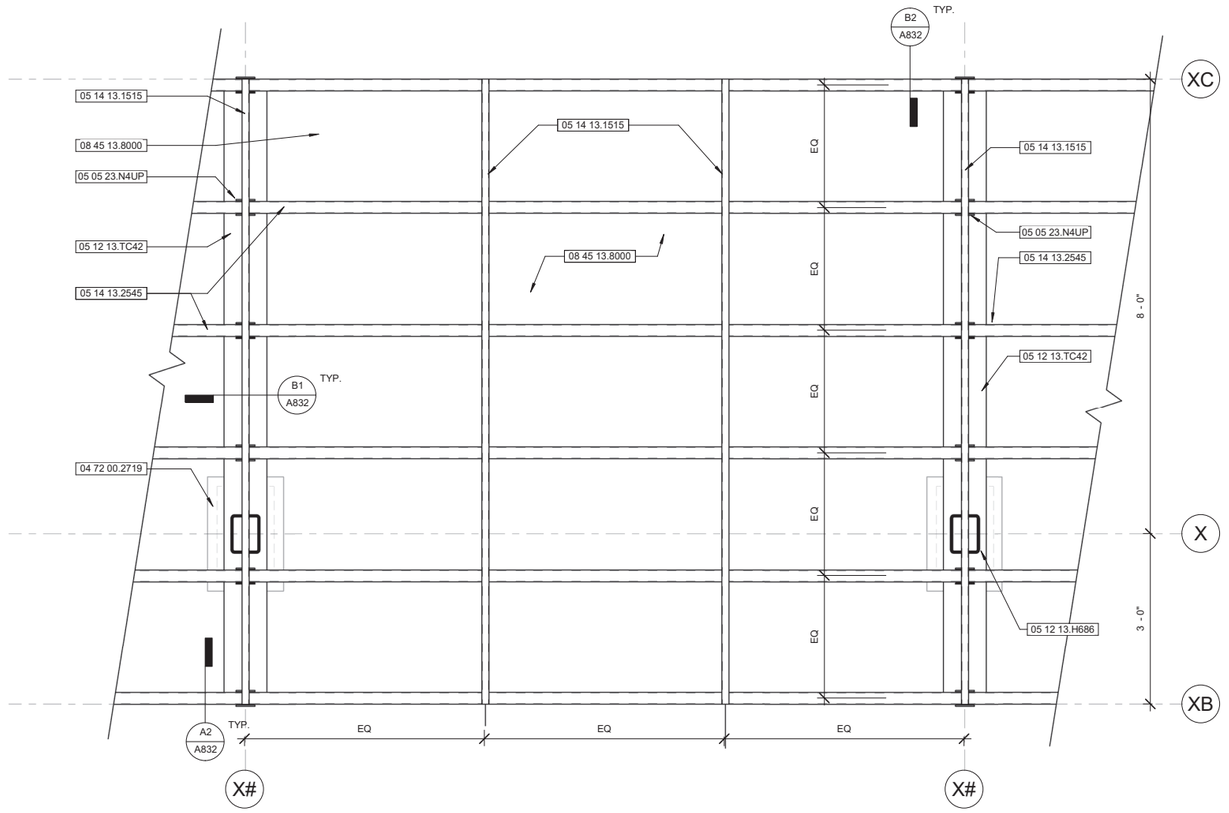

B1 PLAN DETAIL (FROM ABOVE)

3/4" = 1'-0"

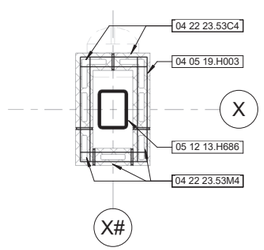

A2 ODD COURSING

3/4" = 1'-0"

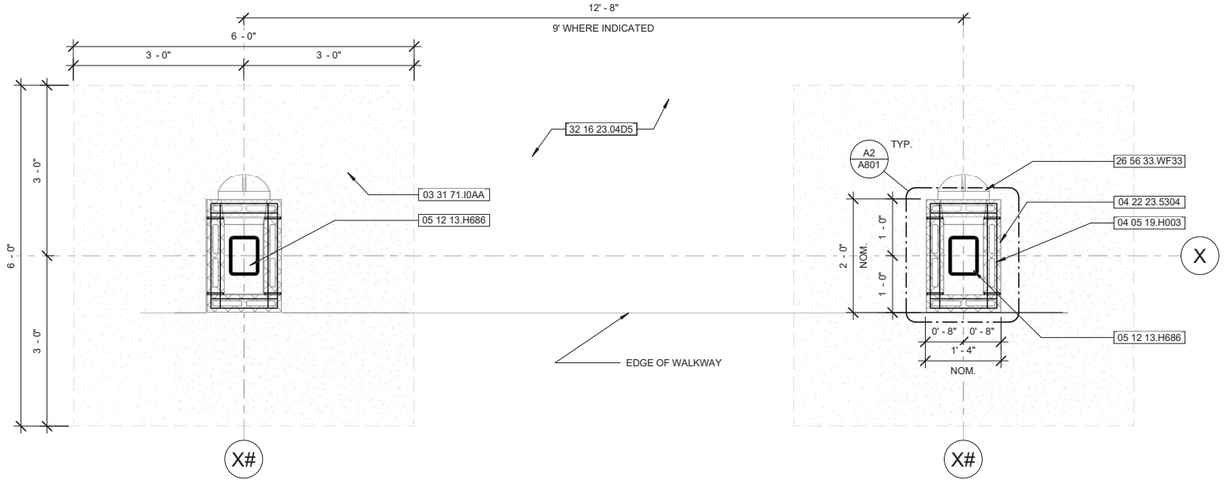

A1 PLAN DETAIL (THRU PIERS)

3/4" = 1'-0"

KEYNOTES

NO.	NOTATION
03 31 71.I0AA	TYP. CAST-IN-PLACE 6' X 6' ISOLATED CONCRETE FOUNDATION, SEE STRUCTURAL.
04 05 19.H003	TYP. CONT. HORIZONTAL MASONRY REINFORCEMENT @ 16IN OC.
04 22 23.53C4	TYP. 4" NOM. ARCHITECTURAL BURNISHED CORNER RETURN CONCRETE MASONRY UNIT.
04 22 23.53M4	TYP. 4" NOM. ARCHITECTURAL BURNISHED HALF BLOCK CONCRETE MASONRY UNIT.
04 22 23.5304	TYP. 4" NOM. ARCHITECTURAL BURNISHED CONCRETE MASONRY UNIT.
04 72 00.2719	TYP. CAST STONE CAP TO MATCH EXISTING, APPROX. 27.5" X 19.5" X 4".
05 05 23.N4UP	TYP. 1/4" STEEL BENT PLATE SUPPORT "U" AT EACH BEAM & PURLIN INTERSECTION.
05 12 13.H686	TYP. ARCHITECTURALLY EXPOSED HSS8X6X3/8 STRUCTURAL STEEL FRAMING, SEE STRUCTURAL.
05 12 13.TC42	TYP. ARCHITECTURALLY EXPOSED WT12X42 STRUCTURAL STEEL FRAMING, SEE STRUCTURAL.
05 14 13.1515	TYP. ARCHITECTURALLY EXPOSED 1.5"X1.5" STRUCTURAL ALUMINUM "H" FRAMING, ATTACH TO PURLINS W/ #12 SS SCREWS @ 6" OC.
05 14 13.2545	TYP. ARCHITECTURALLY EXPOSED TS 4.5" X 2.5" X 3/16"STRUCTURAL ALUMINUM TUBE FRAMING, SEE STRUCTURAL.
08 45 13.8000	TYP. 8MM MULTIWALL POLYCARBONATE PANEL (VEROLITE OPAL OR APPROVED SUBSTITUTION).
26 56 33.WF33	TYP. EXTERIOR WALKWAY LIGHTING 10" SEMI-RECESSED WITH GLARE HOOD. "KIM LIGHTING WF33C/1863KUV/WH"
32 16 23.04D5	TYP. 4" X 120" WIDE BROOM FINISHED CONCRETE SIDEWALK.

0 4" 8" 16" 32"

3/4" = 1'-0"

FLY VPS

DESTIN - FORT WALTON BEACH AIRPORT

OKALOOSA COUNTY

INFRASTRUCTURE
CONSULTING & ENGINEERING
5550 WEST IDLEWILD AVE. SUITE 102
TAMPA, FLORIDA 33634 (813) 330-2710
CERTIFICATE OF AUTHORIZATION NO.:30862

CONSTRUCT WEST APRON EXPANSION AND INFRASTRUCTURE AT VPS

Designer:	Checked by:
MAM	MAM MLM
Technician:	MLM Proj. No.
DM ST MAM	18670

Architect of Record:

Miguel Antonio Martin
AR98279

REVISIONS

NO.	DESCRIPTION	DATE	BY

Drawing Name: MAIN CANOPY PLAN DETAILS

FAA A.I.P. Project No.: 3-12-0081-029-2018

FDOT Project No.:

Date: MAY-2019

Sheet Number: A801

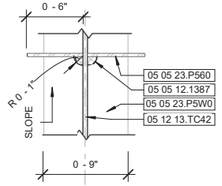

B3 WEEP DETAIL

1 1/2" = 1'-0"

0 2" 4" 8" 16"

1 1/2" = 1'-0"

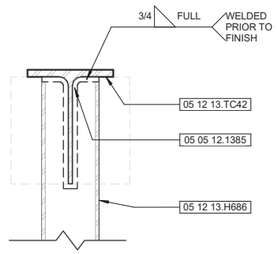

B2 COPE DETAIL

1 1/2" = 1'-0"

0 2" 4" 8" 16"

1 1/2" = 1'-0"

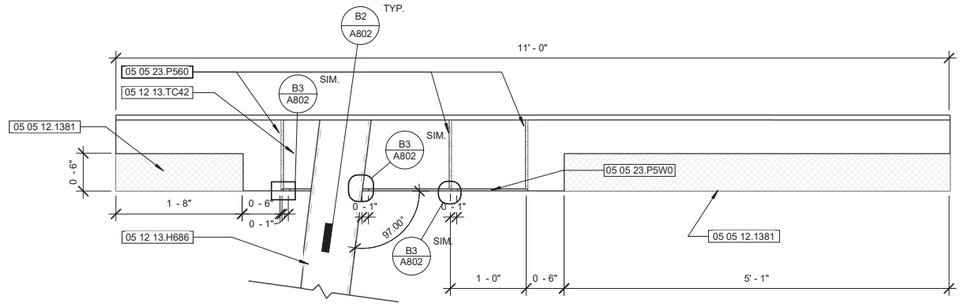

B1 CANOPY SUPPORT DETAIL

1" = 1'-0"

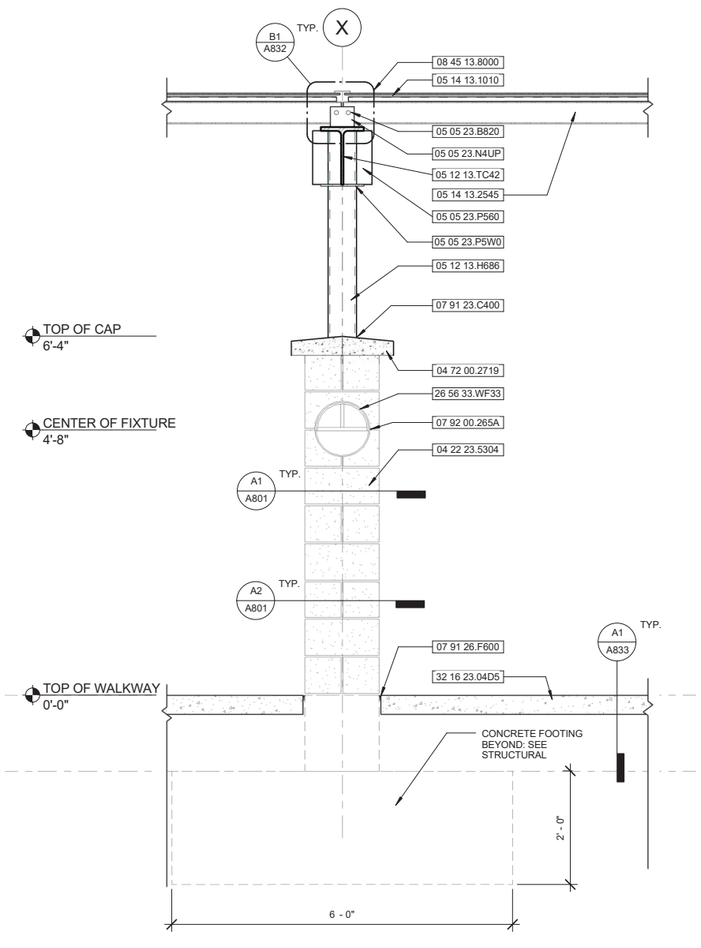

A2 COLUMN SECTION THIN

3/4" = 1'-0"

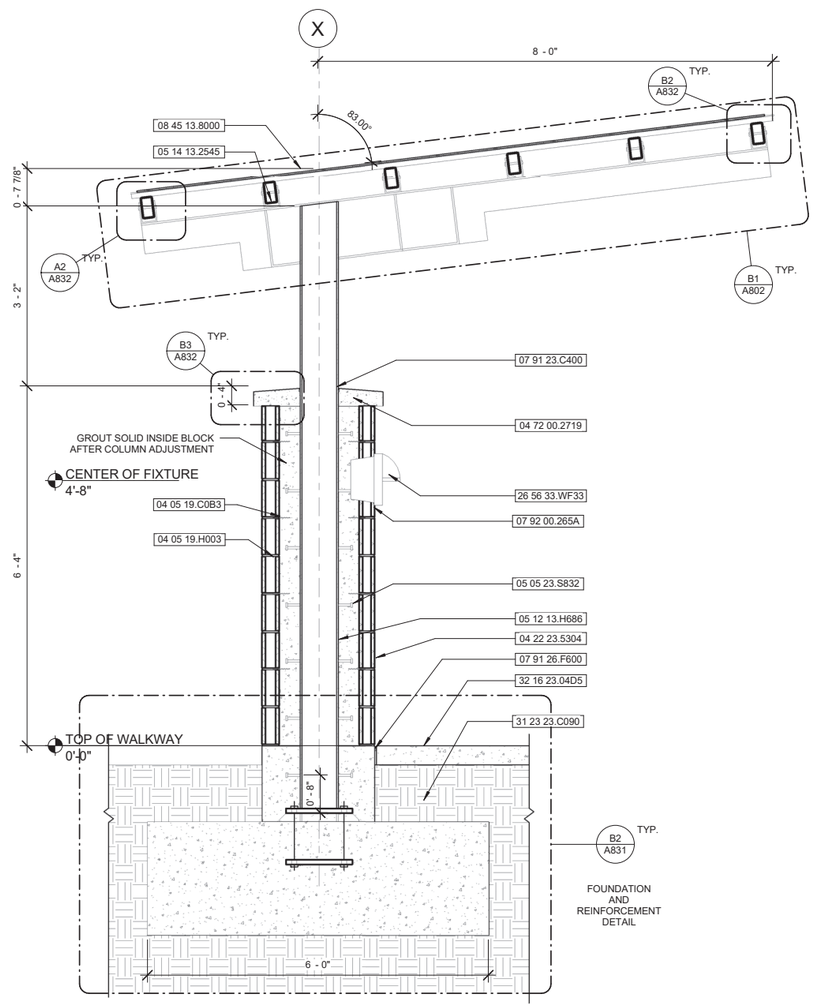

A1 PERPENDICULAR COLUMN SECTION

3/4" = 1'-0"

KEYNOTES

NO.	NOTATION
04 05 19.C0B3	TYP. GALV. CORRUGATED MASONRY ANCHORAGE TIES @ 16IN OC. BOTH WAYS
04 05 19.H003	TYP. CONT. HORIZONTAL MASONRY REINFORCEMENT @ 16IN OC.
04 22 23.5304	TYP. 4" NOM. ARCHITECTURAL BURNISHED CONCRETE MASONRY UNIT.
04 72 00.2719	TYP. CAST STONE CAP TO MATCH EXISTING, APPROX. 27.5" X 19.5" X 4".
05 05 12.1381	TYP. IN-SHOP CUT MEMBER STRAIGHT AS INDICATED PRIOR TO PRIMER APPLICATION.
05 05 12.1385	TYP. IN-SHOP CUT / NOTCH HSS MEMBER STRAIGHT TO ACCEPT WT WEB THICKNESS PRIOR TO PRIMER APPLICATION. CONT. FILLET WELD IN PLACE.
05 05 12.1387	TYP. IN-SHOP CORE PLATE FOR DRAINAGE AS INDICATED PRIOR TO PRIMER APPLICATION.
05 05 23.B820	TYP. 1/2" DIAM. STAINLESS STEEL THRU BOLTS W/ NEOPRENE WASHER BETWEEN SETEEL AND ALUMINUM.
05 05 23.N4UP	TYP. 1/4" STEEL BENT PLATE SUPPORT "U" AT EACH BEAM & PURLIN INTERSECTION.
05 05 23.P5W0	TYP. 5/16" PLATE FULL WEIDTH OF WT FLANGE, CONT WELD ALONG EDGES.
05 05 23.P560	TYP. 5/16" X 6" PLATE, CONT WELD ALONG EDGES.
05 05 23.S832	TYP. 1/2" DIAM. X 3" HD. STUD WELDED ON (2) SIDES OF COLUMN @ 12" OC.
05 12 13.H686	TYP. ARCHITECTURALLY EXPOSED HSS8X6X3/8 STRUCTURAL STEEL FRAMING, SEE STRUCTURAL.
05 12 13.TC42	TYP. ARCHITECTURALLY EXPOSED WT12X42 STRUCTURAL STEEL FRAMING, SEE STRUCTURAL.
05 14 13.1010	TYP. ARCHITECTURALLY EXPOSED 1"X1" STRUCTURAL ALUMINUM SPACER OVER PURLIN, SEE STRUCTURAL.
05 14 13.2545	TYP. ARCHITECTURALLY EXPOSED TS 4.5" X 2.5" X 3/16"STRUCTURAL ALUMINUM TUBE FRAMING, SEE STRUCTURAL.
07 91 23.C400	TYP. 1/4" EXPANSION JOINT WITH CONT. SEALANT AND BACKER ROD WHERE COLUMN ABUTS CAST STONE, COLOR TO MATCH STONE.
07 91 26.F600	TYP. 3/8" FIBER EXPANSION JOINT FILLER WITH CONT. SEALANT WHERE COLUMN ABUTS WALK, COLOR GREY.
07 92 00.265A	TYP. SEALANT CONT. FULL PERIMETER OF LIGHT FIXTURE, WHITE. PROVIDE 1/4" WEEP AT BOTTOM OF JOINT.
08 45 13.8000	TYP. 8MM MULTIWALL POLYCARBONATE PANEL (VEROLITE OPAL OR APPROVED SUBSTITUTION).
26 56 33.WF33	TYP. EXTERIOR WALKWAY LIGHTING 10" SEMI-RECESSED WITH GLARE HOOD. "KIM LIGHTING WF33C/1863KUV/WH"
31 23 23.C090	TYP. 12" MIN. SUB-GRADE COMPACTED TO 95% AASHTO T-180.
32 16 23.04D5	TYP. 4" X 120" WIDE BROOM FINISHED CONCRETE SIDEWALK.

0 3" 6" 1' 2'

1" = 1'-0"

0 4" 8" 16" 32"

3/4" = 1'-0"

FLY VPS

DESTIN - FORT WALTON BEACH AIRPORT

OKALOOSA COUNTY

INFRASTRUCTURE CONSULTING & ENGINEERING
5550 WEST IDLEWILD AVE. SUITE 102
TAMPA, FLORIDA 33634 (813) 330-2710
CERTIFICATE OF AUTHORIZATION NO.:30862

CONSTRUCT WEST APRON EXPANSION AND INFRASTRUCTURE AT VPS

Designer:	Checked by:
MAM	MAM MLM
Technician:	MLM Proj. No.
DM ST MAM	18670

Architect of Record:

Miguel Antonio Martin
AR98279

REVISIONS

NO.	DESCRIPTION	DATE	BY

Drawing Name:
MAIN CANOPY SECTION DETAILS

FAA A.I.P. Project No.:
3-12-0081-029-2018

FDOT Project No.:

Date:	Sheet Number:
MAY-2019	A802

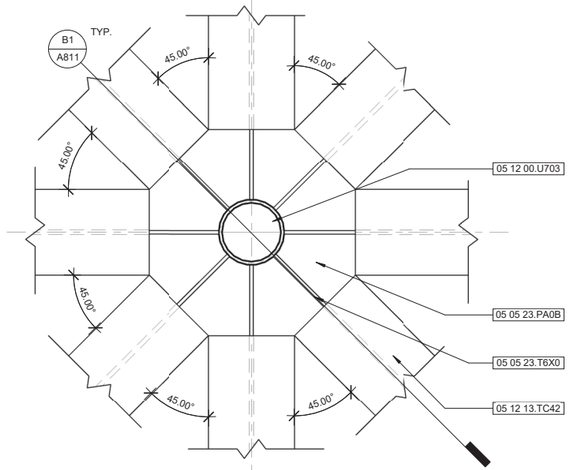

B2 VIEW @ CENTER TOP

1 1/2" = 1'-0"

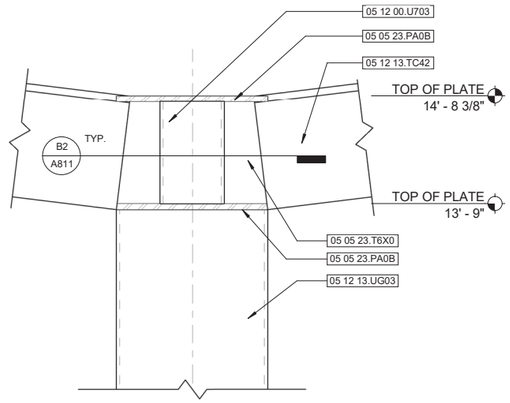

B1 PLATE ASSEMBLY SECTION

1 1/2" = 1'-0"

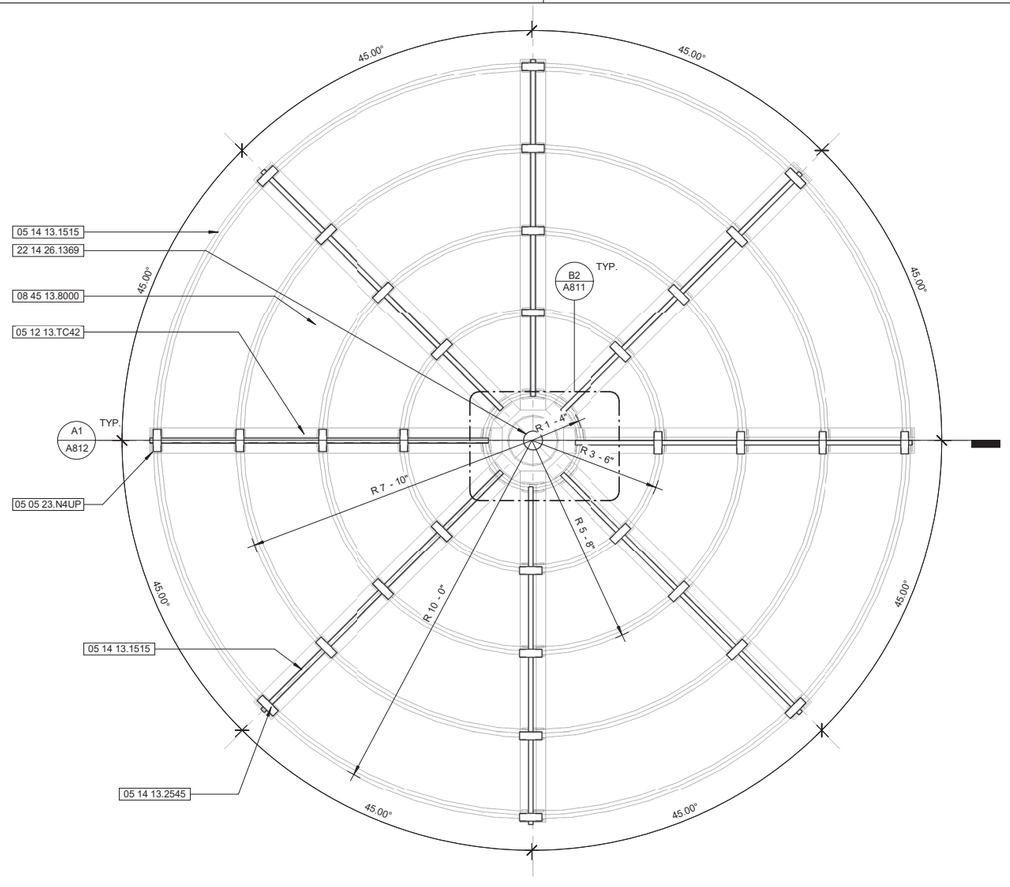

A1 UMBRELLA COLUMN PLAN

1/2" = 1'-0"

KEYNOTES

NO.	NOTATION
05 05 23.N4UP	TYP. 1/4" STEEL BENT PLATE SUPPORT "U" AT EACH BEAM & PURLIN INTERSECTION.
05 05 23.PA0B	TYP. 5/8" STEEL PLATE TOP AND BOTTOM.
05 05 23.T6X0	TYP. 3/8" STIFFINER PLATE IN LINE W/BEAMES.
05 12 00.U703	TYP. HSS6.875X0.375 STRUCTURAL STEEL FRAMING.
05 12 13.TC42	TYP. ARCHITECTURALLY EXPOSED WT12X42 STRUCTURAL STEEL FRAMING, SEE STRUCTURAL.
05 12 13.UG03	TYP. ARCHITECTURALLY EXPOSED HSS16X0.375 STRUCTURAL STEEL FRAIMING, SEE STRUCTURAL.
05 14 13.1515	TYP. ARCHITECTURALLY EXPOSED 1.5"X1.5" STRUCTURAL ALUMINUM "H" FRAMING, ATTACH TO PURLINS W/ #12 SS SCREWS @ 6" OC.
05 14 13.2545	TYP. ARCHITECTURALLY EXPOSED TS 4.5" X 2.5" X 3/16"STRUCTURAL ALUMINUM TUBE FRAMING, SEE STRUCTURAL.
08 45 13.8000	TYP. 8MM MULTIWALL POLYCARBONATE PANEL (VEROLITE OPAL OR APPROVED SUBSTITUTION).
22 14 26.1369	TYP. 5" DIAM ROOF DRAIN W/ CASE ALUMINUM DOME. ROOFING CONTRACTOR TO PROVIDE SHOP DRAWINGS OF INSTALLATION.

0 2" 4" 8" 16"

1 1/2" = 1'-0"

0 6" 1' 2' 4'

1/2" = 1'-0"

FLY VPS

DESTIN - FORT WALTON BEACH AIRPORT

OKALOOSA COUNTY

5550 WEST IDLEWILD AVE. SUITE 102
TAMPA, FLORIDA 33634 (813) 330-2710
CERTIFICATE OF AUTHORIZATION NO.:30862

CONSTRUCT WEST APRON EXPANSION AND INFRASTRUCTURE AT VPS

Designer:	Checked by:
MAM	MAM MLM
Technician:	MLM Proj. No.
DM ST MAM	18670

Architect of Record:

Miguel Antonio Martin
AR98279

MLM-MARTIN ARCHITECTS, INC.
668 N. Orlando Avenue 407.897.6764 ph
Suite 107 407.894.1538 fax
Maitland, FL 32751 www.mlm-martin.com

REVISIONS

NO.	DESCRIPTION	DATE	BY

Drawing Name: UMBRELLA CANOPY PLAN DETAILS

FAA A.I.P. Project No.: 3-12-0081-029-2018

FDOT Project No.:

Date:	Sheet Number:
MAY-2019	A811

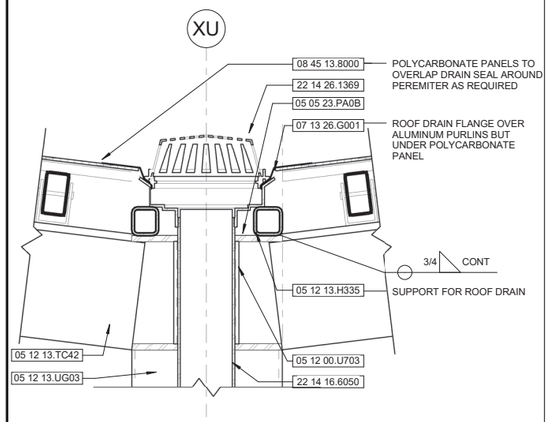

B2 RD AT CANOPY

1 1/2" = 1'-0"

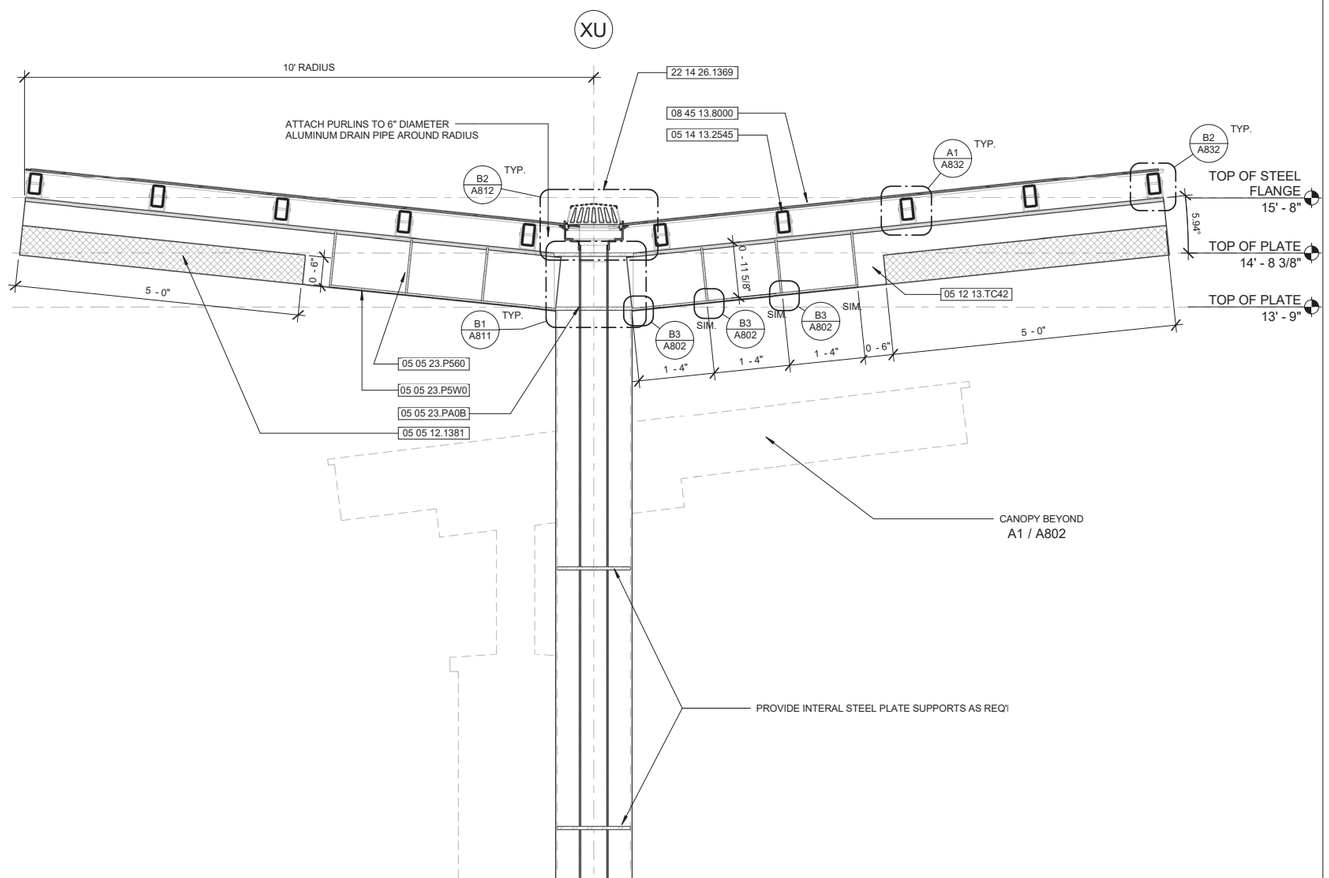

A1 UMBRELLA COLUMN SECTION

3/4" = 1'-0"

KEYNOTES

NO.	NOTATION
05 05 12.1381	TYP. IN-SHOP CUT MEMBER STRAIGHT AS INDICATED PRIOR TO PRIMER APPLICATION.
05 05 23.P5W0	TYP. 5/16" PLATE FULL WEIDTH OF WT FLANGE, CONT WELD ALONG EDGES.
05 05 23.P560	TYP. 5/16" X 6" PLATE, CONT WELD ALONG EDGES.
05 05 23.PA0B	TYP. 5/8" STEEL PLATE TOP AND BOTTOM.
05 12 00.U703	TYP. HSS6.875X0.375 STRUCTURAL STEEL FRAMING.
05 12 13.H335	TYP. ARCHITECTURALLY EXPOSED HSS3X3X5/16 STRUCTURAL STEEL FRAMING, SEE STRUCTURAL.
05 12 13.TC42	TYP. ARCHITECTURALLY EXPOSED WT12X42 STRUCTURAL STEEL FRAMING, SEE STRUCTURAL.
05 12 13.UG03	TYP. ARCHITECTURALLY EXPOSED HSS16X0.375 STRUCTURAL STEEL FRAIMING, SEE STRUCTURAL.
05 14 13.2545	TYP. ARCHITECTURALLY EXPOSED TS 4.5" X 2.5" X 3/16"STRUCTURAL ALUMINUM TUBE FRAMING, SEE STRUCTURAL.
07 13 26.G001	TYP. "PERM-A-BARRIER WALL MEBRANE" SELF-ADHEARING, RUBERIZED ASPHALT/POLYETHYLENE MEMBRANE SHEET WATERPROOFING OR APPROVED SUBSTITUTE. LAP MIN 4" ON TO POLY-CARB. SHEETING.
07 91 26.F600	TYP. 3/8" FIBER EXPANSION JOINT FILLER WITH CONT. SEALANT WHERE COLUMN ABUTS WALK, COLOR GREY.
08 45 13.8000	TYP. 8MM MULTIWALL POLYCARBONATE PANEL (VEROLITE OPAL OR APPROVED SUBSTITUTION).
22 14 16.6050	TYP. 6" DIAM. ALUMINUM DOWNSPOUT, ROLL EDGE OF OUTLET MIN OF 1/2" BACK TO PREVENT KNIFE EDGE.
22 14 26.1369	TYP. 5" DIAM ROOF DRAIN W/ CASE ALUMINUM DOME. ROOFING CONTRACTOR TO PROVIDE SHOP DRAWINGS OF INSTALLATION.
32 16 23.04D5	TYP. 4" X 120" WIDE BROOM FINISHED CONCRETE SIDEWALK.

NOTE:

ROOFING SUBCONTRACTOR TO MEET W/ ARCHITECT PRIOR TO SUBMITAL OF SHOP DRAWINGS TO REVIEW INSTALLATION OF ALUM. PURLINS/POLYCARBONATE PANELS/ROOF DRAIN

0 4" 8" 16" 32"

3/4" = 1'-0"

0 2" 4" 8" 16"

1 1/2" = 1'-0"

FLY VPS

DESTIN - FORT WALTON BEACH AIRPORT

OKALOOSA COUNTY

5550 WEST IDLEWILD AVE. SUITE 102
TAMPA, FLORIDA 33634 (813) 330-2710
CERTIFICATE OF AUTHORIZATION NO.:30862

CONSTRUCT WEST APRON EXPANSION AND INFRASTRUCTURE AT VPS

Designer:	Checked by:
MAM	MAM MLM
Technician:	MLM Proj. No.
DM ST MAM	18670

Architect of Record:

Miguel Antonio Martin
AR98279

668 N
Suite 1
Manla

REVISIONS

NO.	DESCRIPTION	DATE	BY

Drawing Name:

UMBRELLA CANOPY SECTION DETAILS

FAA A.I.P. Project No.:

3-12-0081-029-2018

FDOT Project No.:

Date:	Sheet Number:
MAY-2019	A812

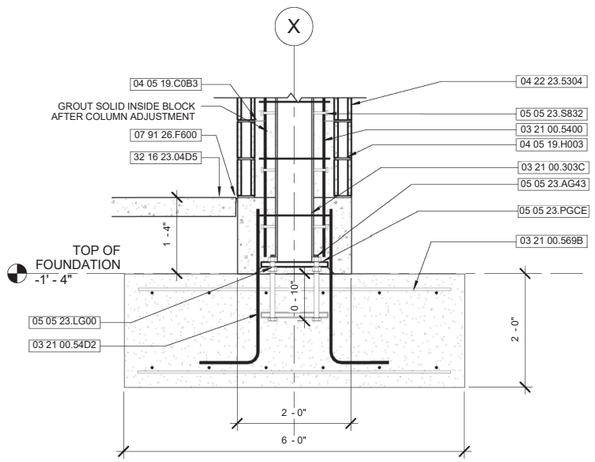

B2 FOUNDATION SECTION

3/4" = 1'-0"

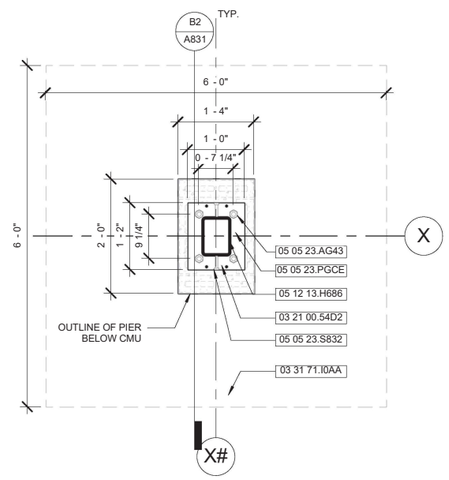

B1 6' SQ FOUNDATION

3/4" = 1'-0"

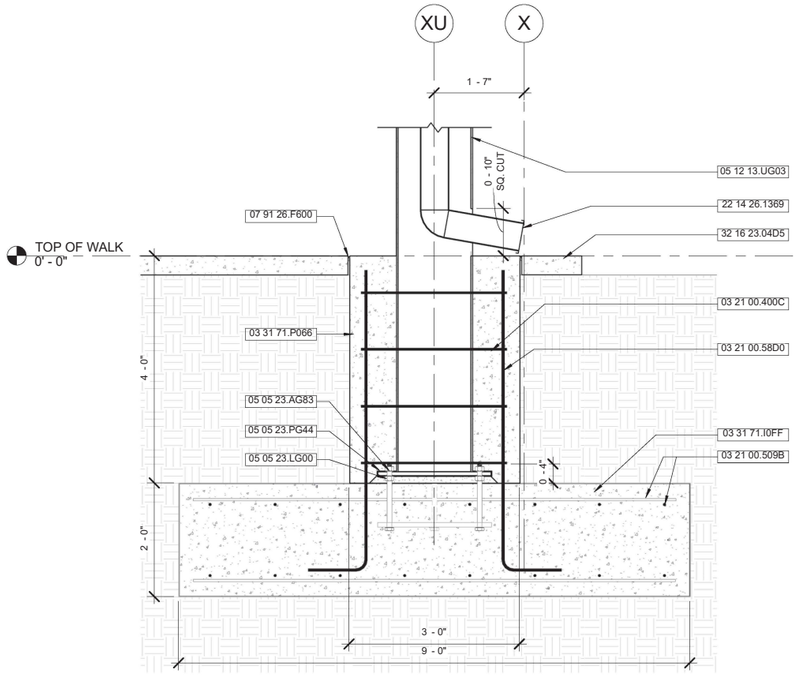

A2 FOUNDATION / PIER SECTION

3/4" = 1'-0"

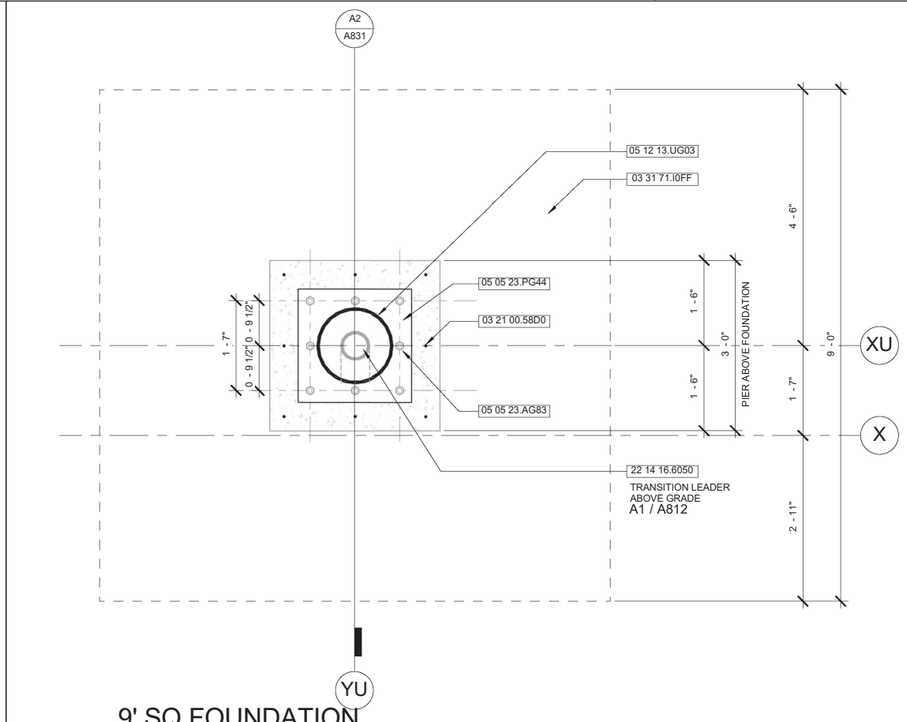

A1 9' SQ FOUNDATION

3/4" = 1'-0"

KEYNOTES

NO.	NOTATION
03 21 00.54D2	TYP. (4) #5 DOWELS BETWEEN BLOCK AND BASE PLATE. (2) EACH SIDE. LEAN DOWELS INSIDE OF STIRRUPS.
03 21 00.58D0	TYP. (8) #5 DOWELS. LEAN DOWELS INSIDE OF STIRRUPS.
03 21 00.303C	TYP. #3 TIES @ TOP & @ 12" OC.
03 21 00.400C	TYP. #4 STIRRUPS @ 12" OC.
03 21 00.509B	TYP. #5 CONCRETE REINFORCEMENT BARS TOP & BOTTOM, EACH WAY @12IN OC.
03 21 00.569B	TYP. (6) #5 CONCRETE REINFORCEMENT BARS TOP & BOTTOM, EACH WAY @12IN OC.
03 21 00.5400	TYP. (4) #5 CONCRETE REINFORCEMENT BARS.
03 31 71.I0AA	TYP. CAST-IN-PLACE 6' X 6' ISOLATED CONCRETE FOUNDATION, SEE STRUCTURAL.
03 31 71.I0FF	TYP. CAST-IN-PLACE 9' X 9' ISOLATED CONCRETE FOUNDATION, SEE STRUCTURAL.
03 31 71.P066	TYP. CAST-IN-PLACE 3' X 3' CONCRETE PIER, CAST AFTER COLUMN ADJUSTMENT.
04 05 19.C0B3	TYP. GALV. CORRUGATED MASONRY ANCHORAGE TIES @ 16IN OC. BOTH WAYS
04 05 19.H003	TYP. CONT. HORIZONTAL MASONRY REINFORCEMENT @ 16IN OC.

KEYNOTES

NO.	NOTATION
04 22 23.5304	TYP. 4" NOM. ARCHITECTURAL BURNISHED CONCRETE MASONRY UNIT.
05 05 23.AG43	TYP. (4) 1" DIAM. ANCHOR BOLTS WITH 1/4X3X3 PL WASHER & NUT ON ANCHORBOLT W/ 10" EMBEDMENT.
05 05 23.AG83	TYP. (8) 1" DIAM. ANCHOR BOLTS WITH 1/4X3X3 PL WASHER & NUT ON ANCHORBOLT W/ 10" EMBEDMENT.
05 05 23.LG00	TYP. 1" DIAM. LEVELING NUTS.
05 05 23.PG44	TYP. 1" X 24" X 24" BASE PLATE ON 1 1/2" NON-SHRINK GROUT.
05 05 23.PGCE	TYP. 1" X 12" X 14" BASE PLATE ON 1 1/2" NON-SHRINK GROUT.
05 05 23.S832	TYP. 1/2" DIAM. X 3" HD. STUD WELDED ON (2) SIDES OF COLUMN @ 12" OC.
05 12 13.H686	TYP. ARCHITECTURALLY EXPOSED HSS8X6X3/8 STRUCTURAL STEEL FRAMING, SEE STRUCTURAL.
05 12 13.UG03	TYP. ARCHITECTURALLY EXPOSED HSS16X0.375 STRUCTURAL STEEL FRAIMING, SEE STRUCTURAL.
07 91 26.F600	TYP. 3/8" FIBER EXPANSION JOINT FILLER WITH CONT. SEALANT WHERE COLUMN ABUTS WALK, COLOR GREY.
22 14 16.6050	TYP. 6" DIAM. ALUMINUM DOWNSPOUT, ROLL EDGE OF OUTLET MIN OF 1/2" BACK TO PREVENT KNIFE EDGE.
22 14 26.1369	TYP. 5" DIAM ROOF DRAIN W/ CASE ALUMINUM DOME. ROOFING CONTRACTOR TO PROVIDE SHOP DRAWINGS OF INSTALLATION.
32 16 23.04D5	TYP. 4" X 120" WIDE BROOM FINISHED CONCRETE SIDEWALK.

SOIL STATEMENT

FOR DESIGN PURPOSES, SOIL BEARING CAPACITY HAS BEEN ASSUMED AT 1500 PSF. IT IS RECOMMENDED THAT SOIL TESTING AND ANALYSIS BE PERFORMED PRIOR TO CONSTRUCTION

0 4" 8" 16" 32"

3/4" = 1'-0"

FLY VPS

DESTIN - FORT WALTON BEACH AIRPORT

OKALOOSA COUNTY

INFRASTRUCTURE CONSULTING & ENGINEERING

5550 WEST IDLEWILD AVE. SUITE 102
TAMPA, FLORIDA 33634 (813) 330-2710
CERTIFICATE OF AUTHORIZATION NO.:30862

CONSTRUCT WEST APRON EXPANSION AND INFRASTRUCTURE AT VPS

Designer:	Checked by:
MAM	MAM MLM
Technician:	MLM Proj. No.
DM ST MAM	18670

Architect of Record:

Miguel Antonio Martin
AR98279

MLM-MARTIN ARCHITECTS, INC.

668 N. Orlando Avenue 407.897.6764 ph
Suite 107 407.894.1338 fax
Maitland, FL 32751 www.mlm-martin.com

REVISIONS

NO.	DESCRIPTION	DATE	BY

Drawing Name: CANOPY FOUNDATION DETAILS

FAA A.I.P. Project No.: 3-12-0081-029-2018

FDOT Project No.:

Date:	Sheet Number:
MAY-2019	A831

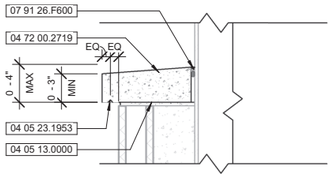

B3 DRIP ON CAP

1 1/2" = 1'-0"

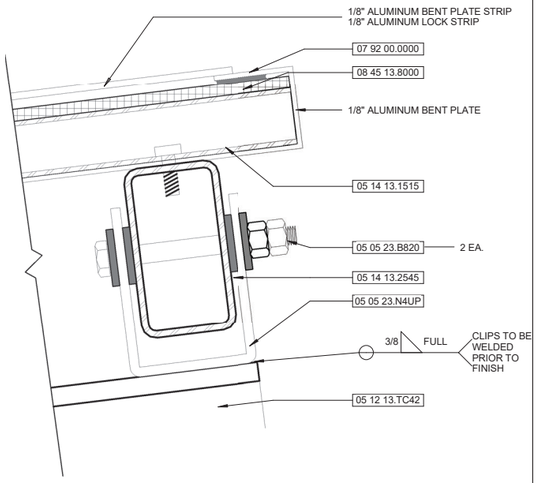

B2 ANGLED PURLIN DETAIL END 1

6" = 1'-0"

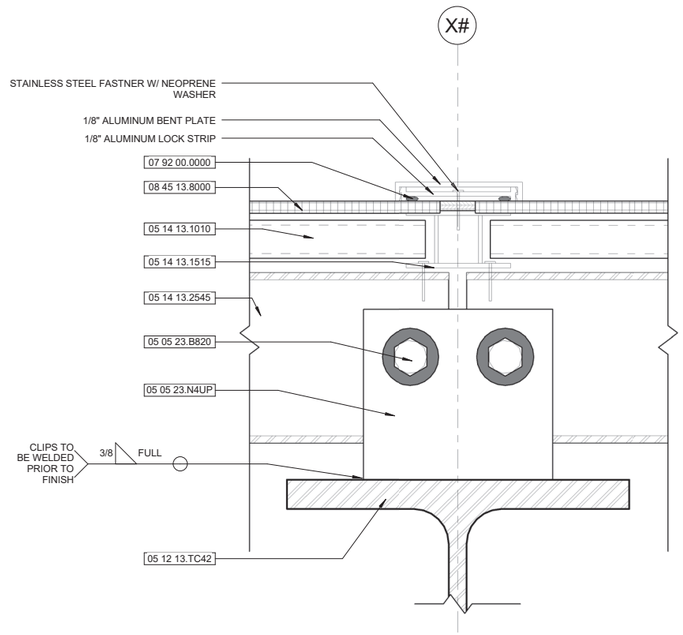

B1 ANGLED PURLIN DETAIL COLUMN

6" = 1'-0"

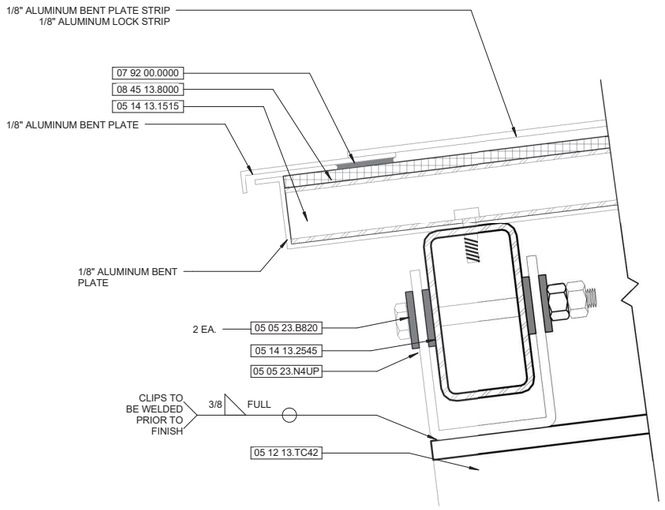

A2 ANGLED PURLIN DETAIL END 2

6" = 1'-0"

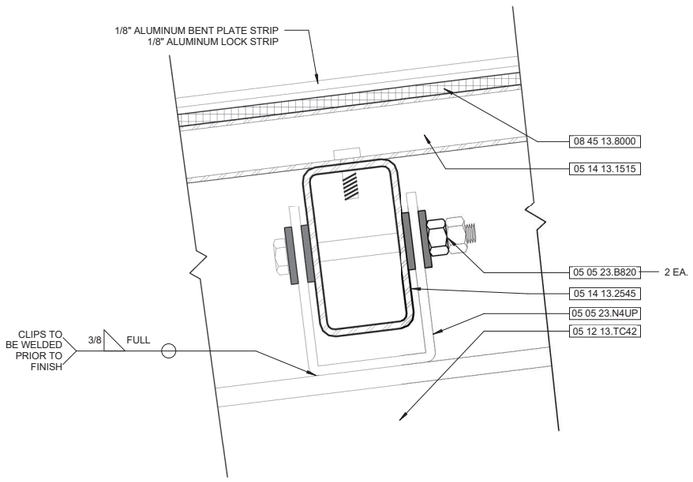

A1 UMBRELLA PURLIN DETAIL MIDDLE

6" = 1'-0"

KEYNOTES

NO.	NOTATION
04 05 13.0000	TYP. MASONRY MORTAR JOINT.
04 05 23.1953	TYP. 1/4" 'V' GROVE CUT CONT. AROUND CAP STONE.
04 72 00.2719	TYP. CAST STONE CAP TO MATCH EXISTING, APPROX. 27.5" X 19.5" X 4".
05 05 23.B820	TYP. 1/2" DIAM. STAINLESS STEEL THRU BOLTS W/ NEOPRENE WASHER BETWEEN SETEEL AND ALUMINUM.
05 05 23.N4UP	TYP. 1/4" STEEL BENT PLATE SUPPORT "U" AT EACH BEAM & PURLIN INTERSECTION.
05 12 13.TC42	TYP. ARCHITECTURALLY EXPOSED WT12X42 STRUCTURAL STEEL FRAMING, SEE STRUCTURAL.
05 14 13.1010	TYP. ARCHITECTURALLY EXPOSED 1"X1" STRUCTURAL ALUMINUM SPACER OVER PURLIN, SEE STRUCTURAL.
05 14 13.1515	TYP. ARCHITECTURALLY EXPOSED 1.5"X1.5" STRUCTURAL ALUMINUM "H" FRAMING, ATTACH TO PURLINS W/ #12 SS SCREWS @ 6" OC.
05 14 13.2545	TYP. ARCHITECTURALLY EXPOSED TS 4.5" X 2.5" X 3/16"STRUCTURAL ALUMINUM TUBE FRAMING, SEE STRUCTURAL.
07 91 26.F600	TYP. 3/8" FIBER EXPANSION JOINT FILLER WITH CONT. SEALANT WHERE COLUMN ABUTS WALK, COLOR GREY.
07 92 00.0000	TYP. SEALANT CONT.
08 45 13.8000	TYP. 8MM MULTIWALL POLYCARBONATE PANEL (VEROLITE OPAL OR APPROVED SUBSTITUTION).

0 2" 4" 8" 16"
1 1/2" = 1'-0"

0 1/2"| " 2" 4"
6" = 1'-0"

FLY VPS

DESTIN - FORT WALTON BEACH AIRPORT

OKALOOSA COUNTY

INFRASTRUCTURE
CONSULTING & ENGINEERING
5550 WEST IDLEWILD AVE. SUITE 102
TAMPA, FLORIDA 33634 (813) 330-2710
CERTIFICATE OF AUTHORIZATION NO.:30862

CONSTRUCT WEST APRON EXPANSION AND INFRASTRUCTURE AT VPS

Designer:	Checked by:
MAM	MAM MLM
Technician:	MLM Proj. No.
DM ST MAM	18670

Architect of Record:

Miguel Antonio Martin
AR98279

REVISIONS

NO.	DESCRIPTION	DATE	BY

Drawing Name:
CANOPY CONNECTONS

FAA A.I.P. Project No.:
3-12-0081-029-2018

FDOT Project No.:

Date: MAY-2019

Sheet Number: A832

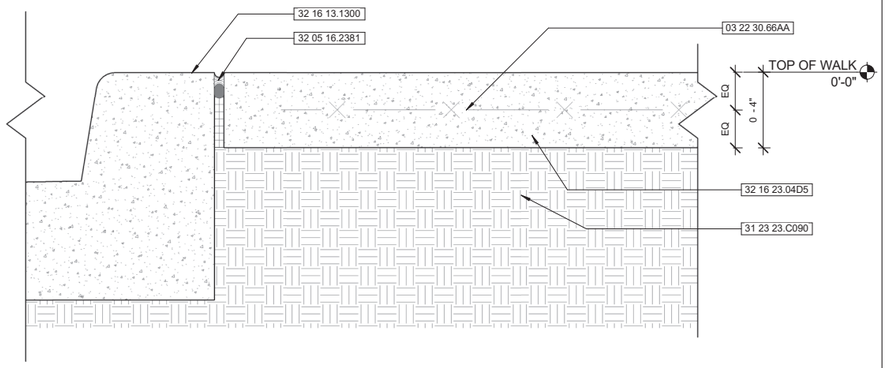

C2 TYP. WALKWAY CURB

3" = 1'-0"

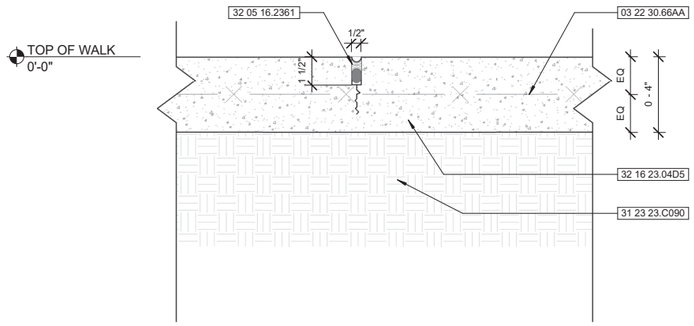

C1 TYP. WALKWAY CONTROL JOINT

3" = 1'-0"

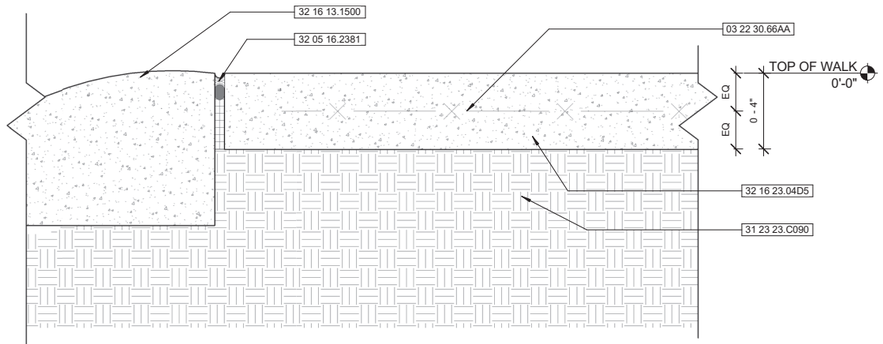

B2 TYP. WALKWAY GUTTER

3" = 1'-0"

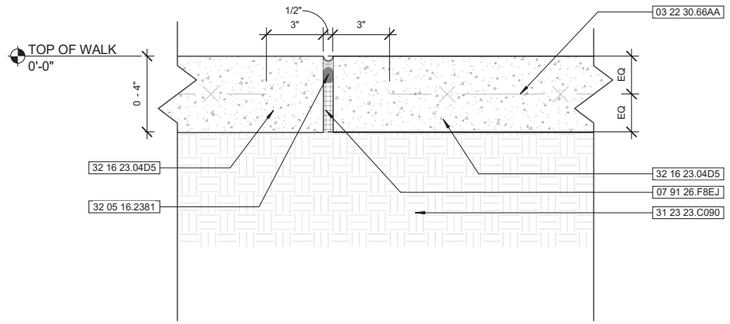

B1 TYP. WALKWAY EXPANSION JOINT

3" = 1'-0"

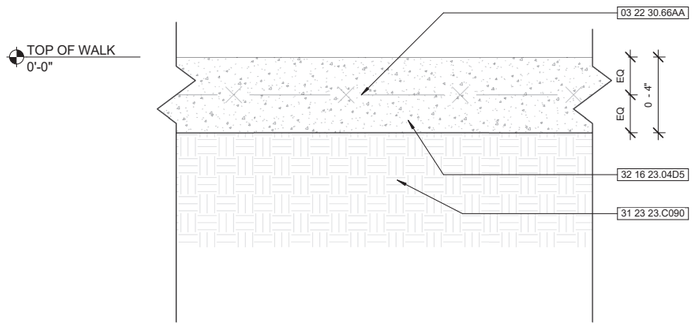

A1 TYP. WALKWAY SECTION

3" = 1'-0"

0 1" 2" 4" 8"

3" = 1'-0"

KEYNOTES

NO.	NOTATION
03 22 30.66AA	6X6 - W1.4 X W1.4 WWF REINFORCEMENT.
07 91 26.F8EJ	TYP. 1/2" FIBER EXPANSION JOINT FILLER WITH CONT. SEALANT, COLOR GREY.
31 23 23.C090	TYP. 12" MIN. SUB-GRADE COMPACTED TO 95% AASHTO T-180.
32 05 16.2361	TYP. 1/2" SAW CUT TO 1-1/2" DEPTH CONTROL JOINT IN WALK WITH CONT. SEALANT, COLOR GREY.
32 05 16.2381	TYP. 1/2" EXPANSION JOINT IN WALK.
32 16 13.1300	TYP. CAST-IN-PLACE CONCRETE CURB, SEE CIVIL.
32 16 13.1500	
32 16 23.04D5	TYP. 4" X 120" WIDE BROOM FINISHED CONCRETE SIDEWALK.

FLY VPS

DESTIN - FORT WALTON BEACH AIRPORT

OKALOOSA COUNTY

INFRASTRUCTURE CONSULTING & ENGINEERING
5550 WEST IDLEWILD AVE. SUITE 102
TAMPA, FLORIDA 33634 (813) 330-2710
CERTIFICATE OF AUTHORIZATION NO.:30862

CONSTRUCT WEST APRON EXPANSION AND INFRASTRUCTURE AT VPS

Designer:	Checked by:
MAM	MAM MLM
Technician:	MLM Proj. No.
DM ST MAM	18670

Architect of Record:

Miguel Antonio Martin
AR98279

REVISIONS

NO.	DESCRIPTION	DATE	BY

Drawing Name:
WALKWAY DETAILS

FAA A.I.P. Project No.:
3-12-0081-029-2018

FDOT Project No.:

Date:	Sheet Number:
MAY-2019	A833

LEGEND

EXISTING		PROPOSED	
	EXISTING TAXIWAY EDGE LIGHT		PROPOSED L-861T(L) LED OMNIDIRECTIONAL (360° BLUE) STAKE MOUNTED ELEVATED TAXIWAY EDGE LIGHT, MITL, WITH PROPERLY SIZED L-830 ISOLATION TRANSFORMER, 6.6A AND L-823 CONNECTORS. THE OVERALL HEIGHT SHALL BE 14". SEE LEGEND NOTE 1.
	EXISTING LIGHT POLE		NEW LIGHT POLE, SEE POLE-LUMINAIRE SCHEDULE, DETAIL 5, SHEET E5.1
			NEW WALL-MOUNT SHUTTLE STOP FIXTURE, SEE POLE-LUMINAIRE SCHEDULE, DETAIL 5, SHEET E5.1
		AP-1	PROPOSED POLE MOUNTED LED APRON FLOODLIGHTS WITH POLE, SEE SHEET **E5.1.**
			PROPOSED CONCRETE-ENCASED DUCTBANK
			PROPOSED 2" DIA. HDPE HORIZONTAL DIRECTIONAL DRILL (1 OR 2 CONDUITS AS INDICATED ON PLANS)
	EXISTING DIRECT BURIED CABLE (AS INDICATED ON THE PLANS)		PROPOSED AIRFIELD CABLE (L-824, TYPE C, 5KV, #8 AWG) IN 2" PVC DIRECT BURIED CONDUIT (SLASHES INDICATE NUMBER OF CABLES)
		FO	PROPOSED FIBER OPTIC CABLE IN 2" PVC DIRECT BURIED CONDUIT
JB	EXISTING JUNCTION BOX/ PULLBOX	B	PROPOSED L-867B, CLASS 1A, SIZE B BASE CAN, 12" DIAMETER, 24" DEEP, 0°, 90°, 180°, AND 270° HUB JUNCTION CAN WITH 3/8" GALVANIZED STEEL BLANK COVER AND GASKET, SECURED WITH STAINLESS STEEL BOLTS WITH 6" P-610 ENVELOPE INSTALLED IN TURF OR SHOULDER PAVEMENT. SEE LEGEND NOTE 3.
R	EXISTING EQUIPMENT TO BE REMOVED	H	NEW HANDHOLE, SEE DETAIL 2, SHEET E4.1

LEGEND NOTES

1. PROPOSED ELEVATED TAXIWAY LIGHTS SHALL BE TYPE L-861T(L), OMNIDIRECTIONAL BLUE LED STAKE MOUNTED AND PROPERLY SIZED L-830 ISOLATION TRANSFORMER AND L-823 CONNECTORS.
2. EXISTING PAVEMENT SHALL BE DIRECTIONAL BORE. COST OF DIRECTIONAL BORE IS INCIDENTAL TO L-110 PAY ITEM. NO OPEN CUTTING OF EXISTING PAVEMENT IS PERMITTED. ALL 1-WAY CONDUIT INSTALLED UNDER STRUCTURAL PAVEMENT IS CONCRETE ENCASED. ALL OTHER CONDUITS ARE DIRECT BURIED EXCEPT AS NOTED ON PLANS. EXTEND CONCRETE ENCASEMENT 10' BEYOND EDGE OF STRUCTURAL PAVEMENT.
3. PROPOSED BASE CAN BOLTS SHALL BE EITHER STAINLESS STEEL WITH ANTI-SEIZE COMPOUND APPLIED PER MANUFACTURER'S INSTRUCTIONS OR APPROVED SAE GRADE 2 COATED BOLTS.

GENERAL ELECTRICAL NOTES

1. THE CONTRACTOR SHALL PROVIDE ALL MATERIALS AND LABOR TO RELOCATE, MODIFY AND INSTALL THE AIRFIELD ELECTRICAL SYSTEMS AS INDICATED ON THE DRAWINGS. ITEMS NOT SHOWN BUT OBVIOUSLY NECESSARY FOR COMPLETION OF THE WORK SHALL BE INCLUDED.
2. NEW MATERIALS SHALL BE U.L. APPROVED.
3. THE DUCT BANKS AND CONDUITS BETWEEN DEMOLISHED MANHOLES, HANDHOLES, BASE CANS ETC. SHALL BE REMOVED EXCEPT WHERE LOCATED UNDER EXISTING PAVEMENT TO REMAIN OR WHERE THE DUCT OR CONDUIT IS TO BE EXTENDED IN THE NEW WORK. ALL REMOVED FIXTURES, TRANSFORMERS, ETC. SHALL BE TURNED OVER TO THE OWNER'S MAINTENANCE DEPARTMENT. ALL REMOVED CABLES, DUCT, BASE CANS, CONCRETE PADS, MANHOLES, ETC. SHALL BE PROPERLY AND LEGALLY DISPOSED OF OFF THE SITE BY THE CONTRACTOR.
4. ALL EXCAVATION WITHIN 5 FEET OF ANY UNDERGROUND UTILITY SHALL BE PERFORMED BY HAND EXCAVATION METHODS. EXISTING DIRECT BURIED CABLES TO REMAIN SHALL BE ENCLOSED IN SPLIT DUCT AND ENCASED IN A 3" ENVELOPE OF P-610 CONCRETE UNDER THE FOLLOWING CONDITIONS:
   4.1. WHEN WITHIN 20 FEET OF EXCAVATION, TRENCHING, ETC.
   4.2. WHEN PAVEMENT WIDENING OR EXTENSIONS WILL BE ROUTED OVER THE EXISTING CABLE. THE LOC-DUCT WILL EXTEND 20 FEET BEYOND THE NEW EDGE OF THE PAVEMENT.
   4.3. WHEN ENCOUNTERED DURING CONSTRUCTION.
   4.4. WHEN SUBJECT TO DAMAGE, IN THE OPINION OF THE ENGINEER, FROM CONSTRUCTION ACTIVITIES. AN END OF DUCT MARKER SHALL BE INSTALLED ABOVE EACH END OF THE DUCT.
5. RUNWAY AND TAXIWAY EDGE LIGHTS SHALL BE INSTALLED 10 FEET FROM THE THEORETICAL EDGE OF THE PAVEMENT OR AS OTHERWISE INDICATED. ALL STRAIGHT SECTIONS OF RUNWAY OR TAXIWAY EDGE LIGHTS SHALL BE ALIGNED TO DEVELOP A CONTINUOUS "IN LINE" APPEARANCE OF THE LIGHTS WHEN VIEWED AT GROUND LEVEL FROM ONE END.
6. ALL WORK SHOWN TO BE DEMOLISHED ON THE DRAWINGS IS BASED ON FIELD OBSERVATIONS OF THE ACTUAL EXISTING CONDITIONS AND ON EXISTING "AS-BUILT" DRAWINGS OF THE AREAS AFFECTED. THEY ARE THEREFORE CONSIDERED TO BE SCHEMATIC. IT IS THE INTENT OF THE DEMOLITION DRAWINGS THAT ALL EQUIPMENT, DEVICES, FIXTURES, WIRING MATERIALS, SYSTEM AND APPURTENANCES, ETC. WHICH ARE NO LONGER REQUIRED AS A RESULT OF THE PROJECT TO BE REMOVED. THE OWNER HAS FIRST RIGHT OF REFUSAL FOR ALL REMOVED ITEMS.
7. ELECTRICAL DEMOLITION WORK SHALL BE LIMITED TO THE AREAS AND SCHEDULES INDICATED IN THE APPROVED PHASING PLAN.
8. ALL GROUND RODS AND OTHER UNDERGROUND GROUNDING CONNECTIONS SHALL BE EXOTHERMICALLY WELDED OR APPROVED EQUIVALENT. EXOTHERMICALLY WELDED CONNECTIONS SHALL BE IN ACCORDANCE WITH MANUFACTURER'S GUIDELINES.
9. REFER TO CIVIL DRAWING FOR ACTUAL JOINT LAYOUTS, DRAINAGE, PAVING DETAILS, ETC. CIVIL DATA IS SHOWN ON ELECTRICAL DRAWINGS FOR REFERENCE ONLY.
10. IN NEW PAVEMENT ALL CONDUITS, DUCTBANKS, COUNTERPOISE, AND GROUNDING CONDUCTORS, ETC. SHALL BE INSTALLED PRIOR TO PLACEMENT ON THE FINAL LIFT OF PAVEMENT.
11. THE CONTRACTOR SHALL HAVE A CABLE TRACER AVAILABLE TO LOCATE THE EXISTING CABLES AND HAND DIGGING SHALL BE UNDERTAKEN WITHIN FIVE (5) FEET OF ANY KNOWN OR SUSPECTED EXISTING UNDERGROUND CABLES AND UTILITIES WHICH ARE NOT TO BE DISTURBED.
12. SHOULD ANY RUNWAY OR TAXIWAY SYSTEM BE INOPERABLE DUE TO THE CONTRACTOR'S WORK, AND THE CONTRACTOR IS UNABLE TO RESTORE THE SYSTEM BY NIGHTFALL WITH PERMANENT REPAIRS, THE CONTRACTOR SHALL AT HIS OWN EXPENSE TAKE NECESSARY MEASURES TO INSURE OPERATIONS OF THE SYSTEM DURING NIGHT HOURS. TEMPORARY WORK SHALL BE SUBJECT TO THE ENGINEER'S APPROVAL. IF THE SYSTEM CANNOT BE RESTORED BY NIGHTFALL, THE CONTRACTOR SHALL INSTALL A TEMPORARY SYSTEM OF BATTERY OPERATED LIGHTS WITH THE APPROPRIATE COLORED LENSES FOR BOTH.
13. IF A LIGHT CAN IS INSTALLED INCORRECTLY, THE DUCT/CONDUIT IS PLUGGED/BROKEN, OR THE CONCRETE JOINTS ARE INSTALLED INCORRECTLY, PAVEMENT ON BOTH SIDES OF THE LIGHT CAN AND THE LIGHT SHALL BE REMOVED AND REPLACED TO JOINT LINE AT THE CONTRACTOR'S EXPENSE.
14. ALL DUCT LOCATED IN OR UNDER THE PAVEMENT, AND WITHIN 5 FEET OF THE EDGE OF THE SHOULDER PAVEMENT SHALL BE CONCRETE ENCASED DUCT. ALL OTHER 2" DUCT (L-110), SHALL BE DIRECT BURIED.
15. DIMENSIONS BETWEEN LIGHTS SHOWN ON A RADIUS ARE CURVE LENGTHS.
16. ITEMS SHOWN IN SCREEN (GHOST) ARE EXISTING ITEMS AND ITEMS SHOWN IN SOLID (BOLD) ARE NEW AND TO BE PROVIDED UNDER THIS CONTRACT UNLESS OTHERWISE NOTED.
17. PROJECT PAY ITEMS: THE PROJECT PAY ITEMS ARE PROVIDED TO BE INCLUSIVE OF ALL WORK TO BE PERFORMED AS SHOWN IN THESE PLANS. ALL WORK TO BE IDENTIFIED WITH A SPECIFIC PAY ITEMS IS TO BE CONSIDERED REQUIRED WORK TO COMPETE THE PROJECT AND IS TO BE SUBSIDIARY TO THE COST OF PROJECT PAY ITEMS PROVIDED.
18. THE CONTRACTOR SHALL VERIFY EXISTING CONDITIONS PRIOR TO STARTING WORK.
19. HIGH VOLTAGE INSULATION RESISTANCE TEST

    SUBJECT EACH SERIES LIGHTING CIRCUIT TO A HIGH VOLTAGE INSULATION RESISTANCE TEST BY MEASUREMENT OF THE INSULATION LEAKAGE CURRENT. PROVIDE A SUITABLE HIGH VOLTAGE TEST INSTRUMENT WHICH HAS A STEADY, FILTERED DIRECT CURRENT OUTPUT VOLTAGE AND LIMITED CURRENT. HIGH VOLTAGE TESTER SHALL INCLUDE AN ACCURATE VOLTMETER AND MICROAMMETER FOR READING VOLTAGE APPLIED TO THE CIRCUIT AND RESULTANT INSULATION LEAKAGE CURRENT. DO NOT APPLY VOLTAGES IN EXCESS OF TEST VALUES SPECIFIED BELOW.

    19.1. TEST PROCEDURE: DISCONNECT BOTH LEADS FROM REGULATOR OUTPUT TERMINALS AND SUPPORT SO THAT AIR GAPS OF SEVERAL INCHES EXIST BETWEEN BARE CONDUCTORS AND GROUND. CLEAN AND DRY CABLE SHEATHS, FOR DISTANCE OF ONE FOOT FROM ENDS OF CABLES AND EXPOSED INSULATION AT ENDS OF CABLES. CONNECT ENDS OF BOTH CONDUCTORS OF THE CIRCUIT TOGETHER AND TO HIGH-VOLTAGE TERMINALS OF TEST EQUIPMENT, AND APPLY TEST VOLTAGE SPECIFIED IN THE FOLLOWING TABULATION BETWEEN CONDUCTORS AND GROUND FOR A PERIOD OF 5 MINUTES.

TEST VOLTAGE, DC	FIRST TEST ON NEW CIRCUITS	TEST ON EXISTING CIRCUITS
SERIES LIGHTING CIRCUITS		
HIGH INTENSITY SERIES LIGHTING CIRCUITS (5000-VOLT LEADS, 500- AND 200-WATT TRANSFORMERS)	9000	5000
MEDIUM INTENSITY SERIES LIGHTING CIRCUITS (5000-VOLT LEADS, 30/45-WATT TRANSFORMERS)	6000	3000
600-VOLT CIRCUITS	1800	800

    WHEN ADDITIONS ARE MADE TO EXISTING CIRCUITS, TEST ONLY NEW SECTIONS IN ACCORDANCE WITH "FIRST TEST ON NEW CIRCUITS" IN TABLE ABOVE. (TO ENSURE RELIABLE OPERATION, TEST COMPLETE CIRCUIT AT REDUCED VOLTAGES INDICATED ABOVE.)

    19.2. LEAKAGE CURRENT: MEASURE AND RECORD INSULATION LEAKAGE CURRENT IN MICROAMPERES FOR EACH CIRCUIT FOR EACH MINUTE APPLICATION OF TEST VOLTAGE. DO NOT EXCEED THE VALUE OF THE INSULATION LEAKAGE CURRENT CALCULATED ON THE BASIS OF THE FOLLOWING LEAKAGE CURRENT ALLOWANCES FOR CABLE AND CONNECTED EQUIPMENT FOR EACH CIRCUIT:

    19.2.1.1. 3 MICROAMPERES FOR EACH 1000 FEET OF CABLE.
    19.2.1.2. 2 MICROAMPERES FOR EACH 200-WATT AND EACH 500-WATT 5000-VOLT SERIES TRANSFORMER.
    19.2.1.3. 2 MICROAMPERES FOR EACH 30/45-WATT 5000-VOLT SPACEING SERIES TRANSFORMER.

    NOTE:
    THE ABOVE VALUES INCLUDE ALLOWANCES FOR THE NORMAL NUMBER OF CONNECTORS AND SPLICES. IF MEASURED VALUE OF INSULATION LEAKAGE CURRENT EXCEEDS CALCULATED VALUE, SECTIONALIZE THE CIRCUIT AND REPEAT SPECIFIED TEST FOR EACH SECTION. LOCATE DEFECTIVE COMPONENTS AND REPAIR OR REPLACE UNTIL REPEATED TESTS INDICATE AN ACCEPTABLE VALUE OF LEAKAGE CURRENT FOR THE ENTIRE CIRCUIT.

20. OPERATING TEST

    UPON COMPLETION OF TESTS, SHOW BY DEMONSTRATION IN SERVICE THAT CIRCUITS, CONTROL EQUIPMENT, AND LIGHTS COVERED BY THE CONTRACT ARE IN GOOD OPERATING CONDITION. OPERATE EACH SWITCH IN THE LIGHTING PANELS SO THAT EACH SWITCH POSITION IS ENGAGED AT LEAST TWICE. DURING THIS PROCESS, OBSERVE LIGHTS AND ASSOCIATED EQUIPMENT TO DETERMINE THAT EACH SWITCH CONTROLS PROPERLY CORRESPONDING CIRCUIT. PROVIDE TELEPHONE OR RADIO COMMUNICATION BETWEEN THE OPERATOR AND THE OBSERVERS. REPEAT TESTS FROM THE ALTERNATE CONTROL STATION, FROM THE REMOTE CONTROL POINTS, AND AGAIN FROM THE LOCAL CONTROL SWITCHES ON THE REGULATORS. TEST EACH LIGHTING CIRCUIT BY OPERATING THE LAMPS AT MAXIMUM BRIGHTNESS FOR NOT LESS THAN 30 MINUTES. VISUALLY EXAMINE AT THE BEGINNING AND AT THE END OF THIS TEST TO ENSURE THAT THE CORRECT NUMBER OF LIGHTS ARE BURNING AT FULL BRIGHTNESS. CONDUCT ONE DAY AND ONE NIGHT OPERATING TEST FOR THE ENGINEER.

ABBREVIATIONS

ABC – AGGREGATE BASE COURSE
AC/ACP – ASPHALTIC CONCRETE PAVEMENT
AIP – AIRPORT IMPROVEMENT PROGRAM
AOA – AIRCRAFT OPERATIONS AREA
AUG – AUGER
AWG – AMERICAN WIRE GAUGE
B – BASELINE
C – CENTERLINE
C – CONDUIT
CBR – CALIFORNIA BEARING RATION
DB – DIRECT BURIED
EDB– CONCRETE ENCASED DUCTBANK
CMP – CORREGATED METAL PIPE
CO – CLEANOUT
CONC – CONCRETE
CPP – CORREGATED PLASTIC PIPE
CSO – CONTRACTOR SECURITY OFFICER
DIA – DIAMETER
DRI – DOUBLE RING INFILTOMETER
DWG – DRAWING
E – EASTING
EG – EXISTING GROUND
EL/ELEV – ELEVATION
EOP – EDGE OF PAVEMENT
ERCP – ELLIPTICAL REINFORCED CONCRETE PIPE
ERSA – EXTENDED RUNWAY SAFETY AREA
EX/EXST/EXIST – EXISTING
FAA – FEDERAL AVIATION ADMINISTRATION
SCDOT –SOUTHCAROLINA DEPARTMENT OF TRANSPORTATION
FOD – FOREIGN OBJECT DEBRIS
G – GREEN
GNE – GROUNDWATER NOT ENCOUNTERED
GS – GLIDE SCOPE
I/C – NUMBER OF CONDUCTORS/CONDUCTOR
IE/INV – INVERT ELEVATION / INVERT
ILS – INSTRUMENT LANDING SYSTEM
JB – JUNCTION BOX
kV – KILOVOLT
LEO – LAW ENFORCEMENT OFFICER
LHA – LIGHT HOUSING ASSEMBLY (PAPI)
LF – LINEAR FEET
LT – LEFT
MAX – MAXIMUM
MES – MITERED END SECTION
MIN – MINIMUM
N – NORTHING
NAD – NORTH AMERICAN DATUM
NGVD – NATIONAL GEODETIC VERTICAL DATUM
NOTAM – NOTICE TO AIRMEN
NTS – NOT TO SCALE
OC – ON CENTER
OFA – OBJECT FREE AREA
PC – POINT OF CURVATURE
PCC – PORTLAND CEMENT CONCRETE
PERF – PERFORATED
PG – PROPOSED GRADE
PT – POINT OF TANGENCY
PVC – POLYVINYL CHLORIDE PIPE
PVI – POINT OF VERTICAL INTERSECTION
R– RED
RW – RUNWAY
RCP – REINFORCED CONCRETE PIPE
RGL – RUNWAY GUARD LIGHT
RPZ – RUNWAY PROTECTION ZONE
RSA – RUNWAY SAFETY AREA
RT – RIGHT
S – STRAIGHT
SCAC – SOUTH CAROLINA AVIATION COMMISSION
SCH – SCHEDULE
SGN – SIGN
SIDA – SECURITY IDENTIFICATION DISPLAY AREA
SPT – STANDARD PENETRATION TEST
SS – STAINLESS STEEL
STA – STATION
STD – STANDARD
TL – TAXILANE
TW – TAXIWAY
TDZ – TOUCHDOWN ZONE
TSA – TAXIWAY SAFETY AREA
TYP – TYPICAL
UON – UNLESS OTHERWISE NOTED
W – WHITE
Y – YELLOW

DEMOLITION TAGS

THE FOLLOWING ARE USED IN CONJUNCTION WITH DEVICES:

(EX) —— EXISTING SHALL REMAIN
(ER) —— EXISTING SHALL BE REMOVED
(EN) —— EXISTING SHALL BE REPLACED WITH NEW DEVICE
(EXR) —— EXISTING SHALL BE RELOCATED TO NEW LOCATION
(ERP) —— EXISTING IN RELOCATED POSITION

EXISTING ITEMS NOT SHOWN SHALL REMAIN AS IS.

OHMEGA
The Ohmega Group, Inc. | Be Brilliant.
Consulting ■ Engineers
1756 SILVER STREET, JACKSONVILLE, FL 32206
T : 904 807 6512 | WWW.OHMEGAGROUP.COM
FLORIDA COA NO. 25911

DESTIN - FORT WALTON BEACH AIRPORT

OKALOOSA COUNTY

INFRASTRUCTURE
CONSULTING & ENGINEERING
5550 WEST IDLEWILD AVE. SUITE 102
TAMPA, FLORIDA 33634 (813) 330-2701
CERTIFICATE OF AUTHORIZATION NO.: 30862

Project Name:
CONSTRUCT WEST APRON AND INFRASTRUCTURE AT VPS

Designer:	Checked by:
BPR	MAM
Technician:	TOG Proj. No.:
BPR	00591-01-0618

Engineer of Record:

MARK A. MORLEY LICENSE No. 59813 STATE OF FLORIDA PROFESSIONAL ENGINEER 5-16-19

Notes:

REVISIONS

No.	Description	Date	By

Drawing Name:
ELECTRICAL LEGEND & NOTES

FAA A.I.P. Project No.:
3-12-0081-029-2018

FDOT Project No.:

Date:	Sheet Number:
MAY 2019	E0.1

File Path: M:\Projects\2018 Projects\00591-01-0618 West Apron Expansion at the Destin-Fort Walton Beach Airport (VPS)\Dwgs\Elec\VPS - E0.1 Electrical Legend & Notes.dwg Date: 5/16/2019 6:37 PM

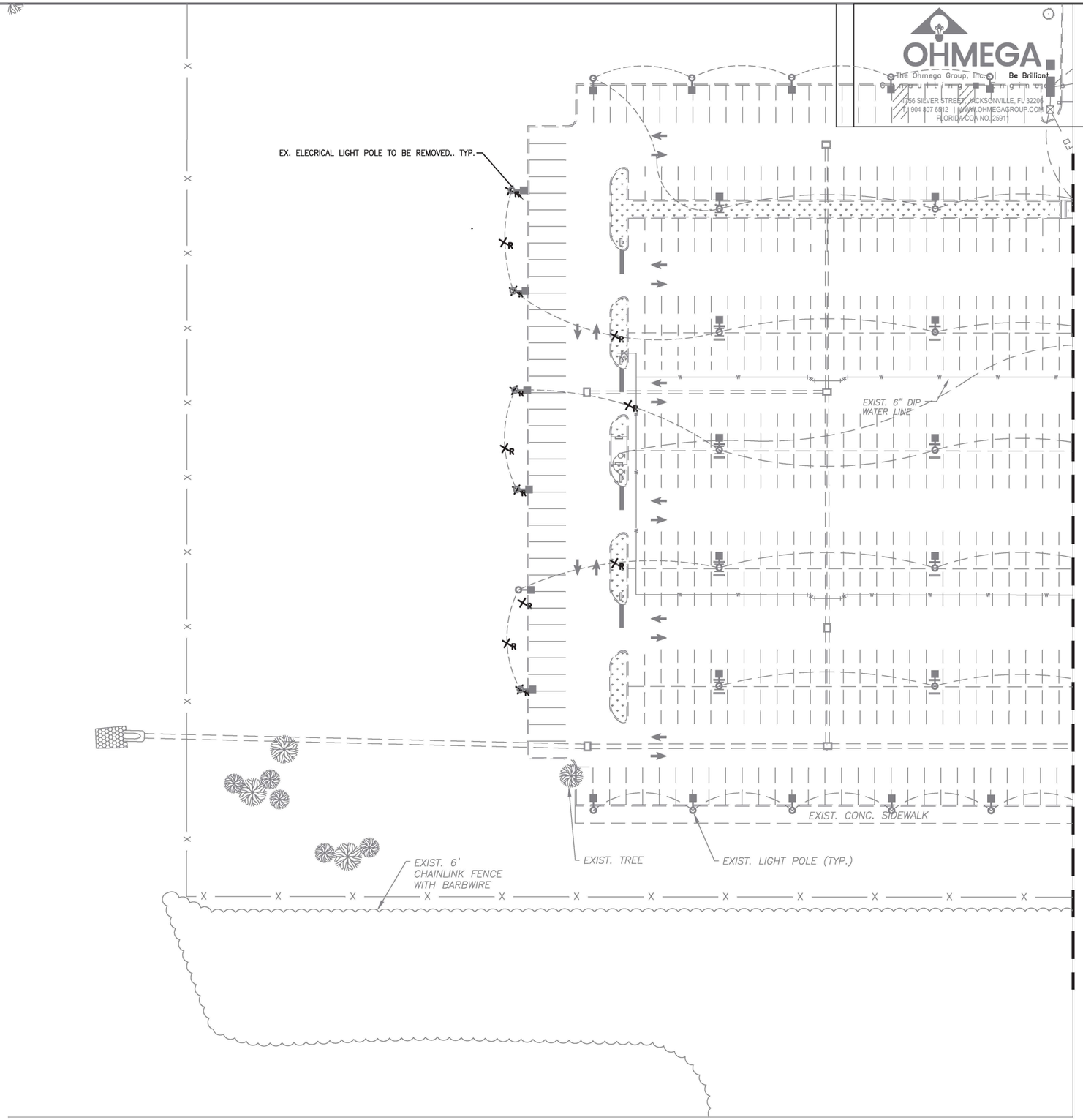

OHMEGA
The Ohmega Group, Inc. | Be Brilliant
Consulting Engineers
256 SILVER STREET, JACKSONVILLE, FL 32206
904 807 6912 | WWW.OHMEGAGROUP.COM
FLORIDA COA NO.:2591

FLY VPS

DESTIN - FORT WALTON BEACH AIRPORT

OKALOOSA COUNTY

INFRASTRUCTURE
CONSULTING & ENGINEERING
5550 WEST IDLEWILD AVE. SUITE 102
TAMPA, FLORIDA 33634 (813) 330-2701
CERTIFICATE OF AUTHORIZATION NO.: 30862

Project Name:
CONSTRUCT WEST APRON AND INFRASTRUCTURE AT VPS

Designer:	Checked by:
BPR	MAM
Technician:	TOG Proj. No.:
BPR	00591-01-0618

Engineer of Record:

MARK A. MORLEY LICENSE No. 59813 STATE OF FLORIDA 5-16-19 PROFESSIONAL ENGINEER

Notes:

REVISIONS

No.	Description	Date	By

Drawing Name:
ELECTRICAL DEMOLITION PLAN

FAA A.I.P. Project No.:
3-12-0081-029-2018

FDOT Project No.:

Date:	Sheet Number:
MAY 2019	E1.1

File Path: M:\Projects\2018 Projects\00591-01-0618 West Apron Expansion at the Destin-Fort Walton Beach Airport (VPS)\Dwgs\Elec\VPS - E1.X Demolition Plans.dwg Date: 5/16/2019 6:39 PM

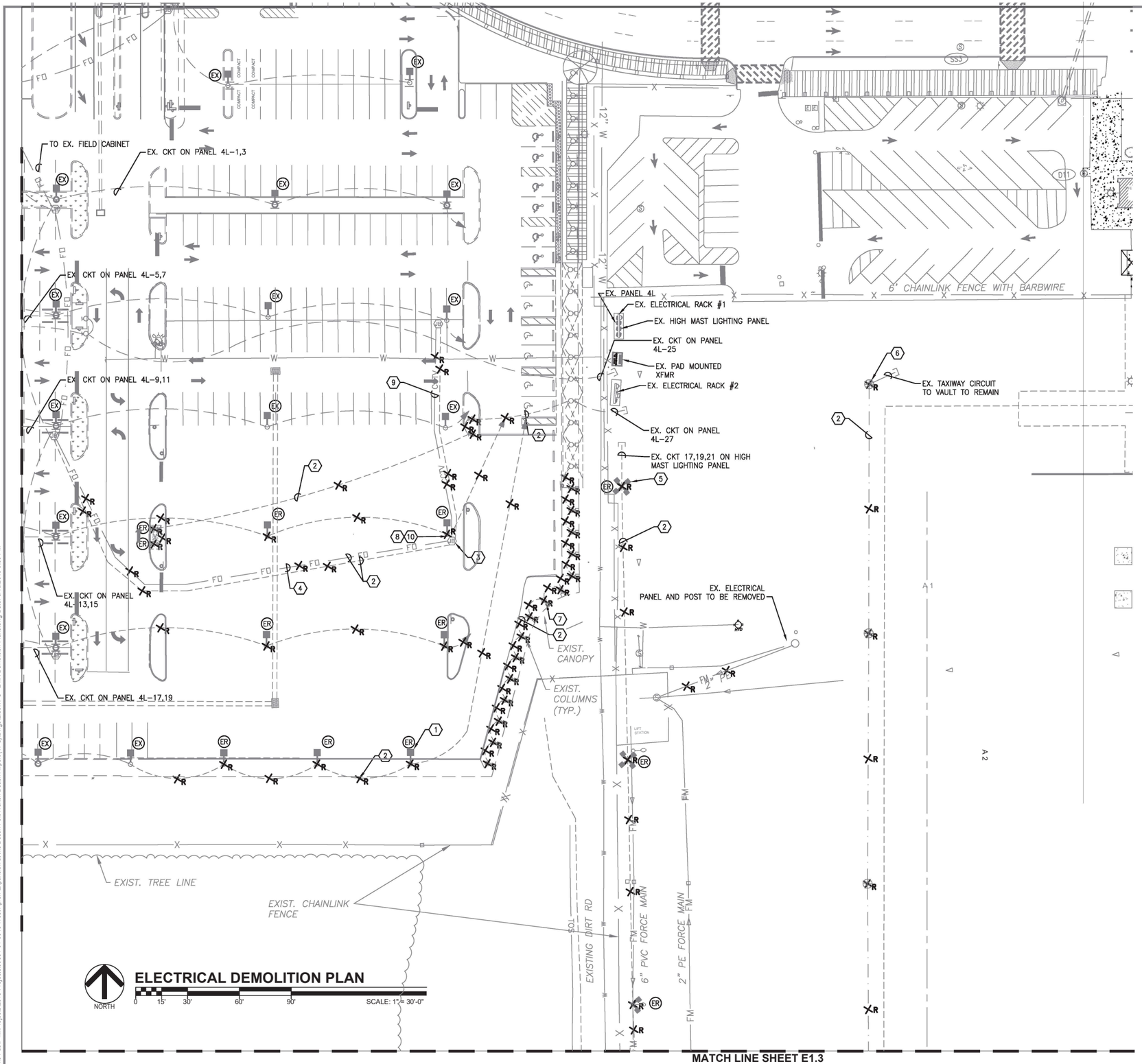

ELECTRICAL DEMOLITION PLAN

MATCH LINE SHEET E1.3

KEYED NOTES

1. EXISTING LIGHT POLE AND FOUNDATION TO BE REMOVED. TYPICAL.
2. EXISTING CONDUIT AND CONDUCTORS TO BE REMOVED. TYPICAL.
3. EXISTING SWITCH BOX TO POLE MOUNTED CAMERAS TO BE RELOCATED.
4. EXISTING FIBER OPTIC CABLES FOR POLE MOUNTED CAMERAS TO BE REMOVED BACK TO SOURCE PATCH PANEL IN EXISTING FIELD CABINET.
5. EXISTING HIGH MAST APRON LIGHT FIXTURES AND POLE TO BE REMOVED. REMOVE ALL CONDUCTORS BACK TO SOURCE PANEL. TYPICAL.
6. DISCONNECT AND REMOVE EXISTING LIGHT FIXTURE, TRANSFORMER AND LIGHT BASE. TYPICAL.
7. EXISTING WALL MOUNTED LIGHT FIXTURE ON SIDEWALK POSTS TO BE REMOVED. TYPICAL.
8. EXISTING POLE MOUNTED CABINET FOR CAMERAS TO BE CAREFULLY REMOVED FOR RELOCATION TO AN EXISTING LIGHT POLE.
9. EXISTING CAT-5 ETHERNET COMMUNICATIONS CABLE AND CONDUIT BETWEEN EXISTING POLES TO BE REMOVED.
10. CAREFULLY REMOVED EXISTING POLE MOUNTED CAMERA. TURN OVER TO AIRPORT.

OHMEGA
The Ohmega Group, Inc. | Be Brilliant.
Consulting ■ Engineers
1756 SILVER STREET, JACKSONVILLE, FL 32206
T: 904 807 6512 | WWW.OHMEGAGROUP.COM
FLORIDA COA NO. 25911

FLY VPS
DESTIN - FORT WALTON BEACH AIRPORT

OKALOOSA COUNTY

INFRASTRUCTURE CONSULTING & ENGINEERING
5550 WEST IDLEWILD AVE. SUITE 102
TAMPA, FLORIDA 33634 (813) 330-2701
CERTIFICATE OF AUTHORIZATION NO.: 30862

Project Name:
CONSTRUCT WEST APRON AND INFRASTRUCTURE AT VPS

Designer:	Checked by:
BPR	MAM
Technician:	TOG Proj. No.:
BPR	00591-01-0618

Engineer of Record:

MARK A. MORLEY LICENSE No. 59813 STATE OF FLORIDA PROFESSIONAL ENGINEER
5-16-19

Notes:

REVISIONS

No.	Description	Date	By

Drawing Name:
ELECTRICAL DEMOLITION PLAN

FAA A.I.P. Project No.:
3-12-0081-029-2018

FDOT Project No.:

Date:	Sheet Number:
MAY 2019	E1.2

File Path: M:\Projects\2018 Projects\00591-01-0618 West Apron Expansion at the Destin-Fort Walton Beach Airport (VPS)\Dwgs\Elec\VPS - E1.X Demolition Plans.dwg Date: 5/16/2019 6:39 PM

MATCH LINE SHEET E1.2

DENSE VEGETATION

DENSE VEGETATION

EXIST. TREE LINE

EXIST. 18" STAND PIPE

CONC. BASIN

TOB

EXIST. VAULT

EXIST. DIRT RD

EXISTING DIRT RD

2" PE FORCE MAIN

6' CHAINLINK FENCE WITH BARBWIRE

6" PVC

12" W

12"W DI

EXIST. 6' CHAINLINK FENCE WITH BARBWIRE

CONTROL POINT 1002
SET 1/2" IRC GFY
N:548750.61
E:1322778.95

EXIST. TREE LINE

AIRPORT LEASE LINE

DENSE VEGETATION

CONCRETE

GATE B5

B5

A3

B6

KEYED NOTES

2. EXISTING CONDUIT AND CONDUCTORS TO BE REMOVED. TYPICAL.
3. EXISTING PULLBOX/JUNCTION BOX TO POLE MOUNTED CAMERAS TO BE REMOVED.
5. EXISTING HIGH MAST APRON LIGHT FIXTURES AND POLE TO BE REMOVED. REMOVE ALL CONDUCTORS BACK TO SOURCE PANEL. TYPICAL.
6. DISCONNECT AND REMOVE EXISTING LIGHT FIXTURE, TRANSFORMER AND LIGHT BASE. TYPICAL.

NORTH

ELECTRICAL DEMOLITION PLAN

0 15' 30' 60' 90' SCALE: 1" = 30'-0"

OHMEGA
The Ohmega Group, Inc. | Be Brilliant.
Consulting ■ Engineers
1756 SILVER STREET, JACKSONVILLE, FL 32206
T: 904.807.6512 | WWW.OHMEGAGROUP.COM
FLORIDA COA NO. 29911

FLY VPS

DESTIN - FORT WALTON BEACH AIRPORT

OKALOOSA COUNTY

INFRASTRUCTURE
CONSULTING & ENGINEERING
5550 WEST IDLEWILD AVE. SUITE 102
TAMPA, FLORIDA 33634 (813) 330-2701
CERTIFICATE OF AUTHORIZATION NO.: 30862

Project Name:
CONSTRUCT WEST APRON AND INFRASTRUCTURE AT VPS

Designer:	Checked by:
BPR	MAM
Technician:	TOG Proj. No.:
BPR	00591-01-0618

Engineer of Record:

MARK A. MORLEY LICENSE No. 59813 STATE OF FLORIDA PROFESSIONAL ENGINEER
Mark A. Morley
5-16-19

Notes:

REVISIONS

No.	Description	Date	By

Drawing Name:
ELECTRICAL DEMOLITION PLAN

FAA A.I.P. Project No.:
3-12-0081-029-2018

FDOT Project No.:

Date:	Sheet Number:
MAY 2019	E1.3

File Path: M:\Projects\2018 Projects\00591-01-0618 West Apron Expansion at the Destin-Fort Walton Beach Airport (VPS)\Dwgs\Elec\VPS - E1.X Demolition Plans.dwg Date: 5/16/2019 6:40 PM

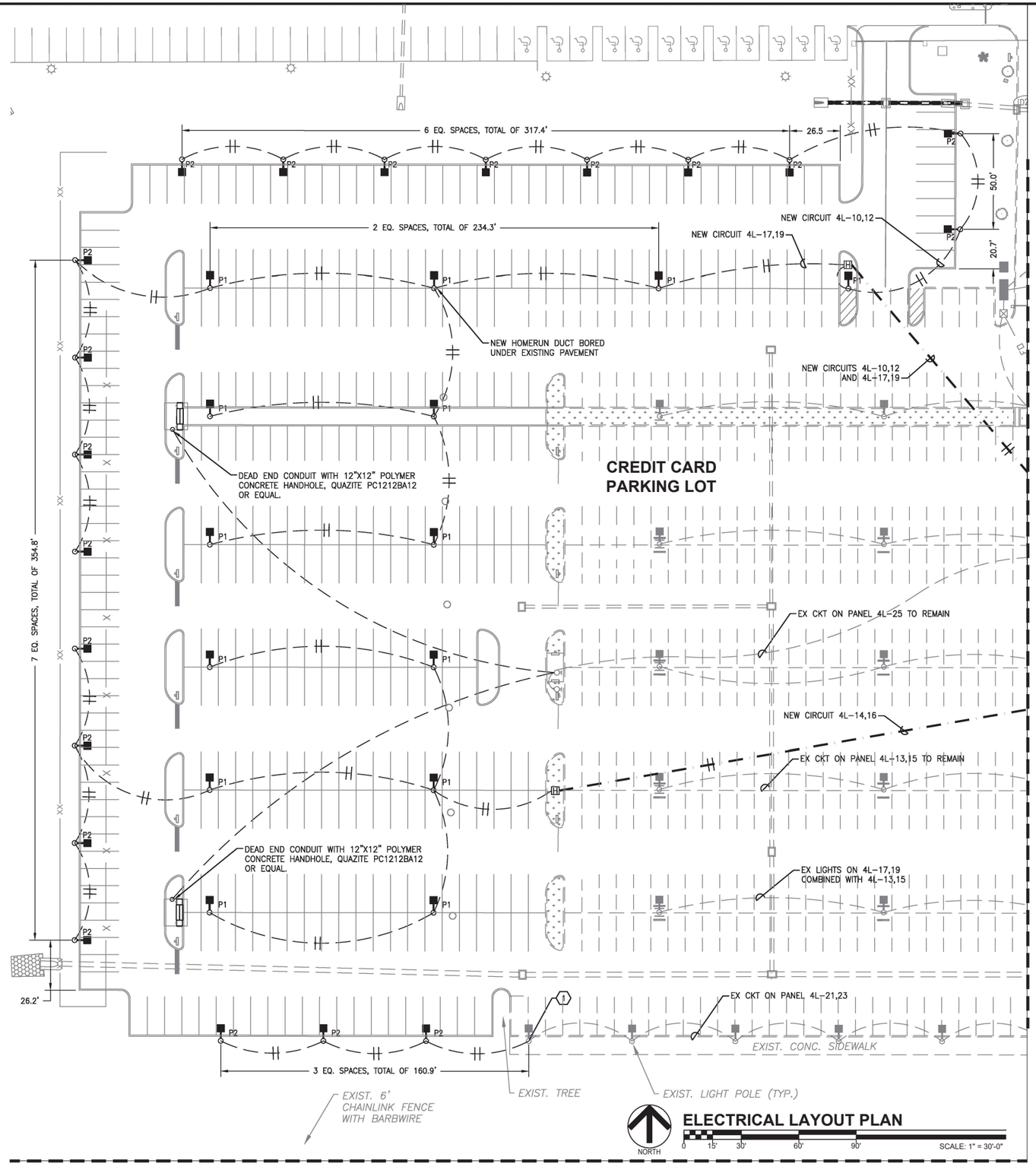

ELECTRICAL LAYOUT PLAN

GENERAL NOTES

1. ALL POLE LIGHTING CIRCUITS TO BE 2#10, 1#10G, 1" CONDUIT UNLESS NOTED OTHERWISE.
2. CIRCUITS SHALL BE RAN AS SHOWN, IN THE EVENT THEY ARE CIRCUITED DIFFERENTLY, VOLTAGE DROP CALCULATIONS SHALL BE PERFORMED NOT TO EXCEED 3%.
3. SEE SHEET E5.1 FOR LIGHT POLE DETAILS.
4. POLES ARE TYPICALLY 2-1/2' FROM CURB, OR CENTERED ON ISLAND.

KEYED NOTES

(1) SPLICE TO EXISTING LIGHTING CIRCUIT INSIDE LIGHT POLE INDICATED.

OHMEGA
The Ohmega Group, Inc. | Be Brilliant.
Consulting ■ Engineers
1756 SILVER STREET, JACKSONVILLE, FL 32206
T : 904 807 6512 | WWW.OHMEGAGROUP.COM
FLORIDA COA NO. 25911

FLY VPS
DESTIN - FORT WALTON BEACH AIRPORT

OKALOOSA COUNTY

INFRASTRUCTURE
CONSULTING & ENGINEERING
5550 WEST IDLEWILD AVE. SUITE 102
TAMPA, FLORIDA 33634 (813) 330-2701
CERTIFICATE OF AUTHORIZATION NO.: 30862

Project Name:
CONSTRUCT WEST APRON AND INFRASTRUCTURE AT VPS

Designer:	Checked by:
BPR	MAM
Technician:	TOG Proj. No.:
BPR	00591-01-0618

Engineer of Record:

MARK A. MORLEY LICENSE No. 59813 STATE OF FLORIDA PROFESSIONAL ENGINEER 5-16-19

Notes:

REVISIONS

No.	Description	Date	By

Drawing Name:
ELECTRICAL LAYOUT PLAN

FAA A.I.P. Project No.:
3-12-0081-029-2018

FDOT Project No.:

Date:	Sheet Number:
MAY 2019	E2.1

File Path: M:\Projects\2018 Projects\00591-01-0618 West Apron Expansion at the Destin-Fort Walton Beach Airport (VPS)\Dwgs\Elec\VPS - E2.X Electrical Layout Plans.dwg Date: 5/16/2019 6:42 PM

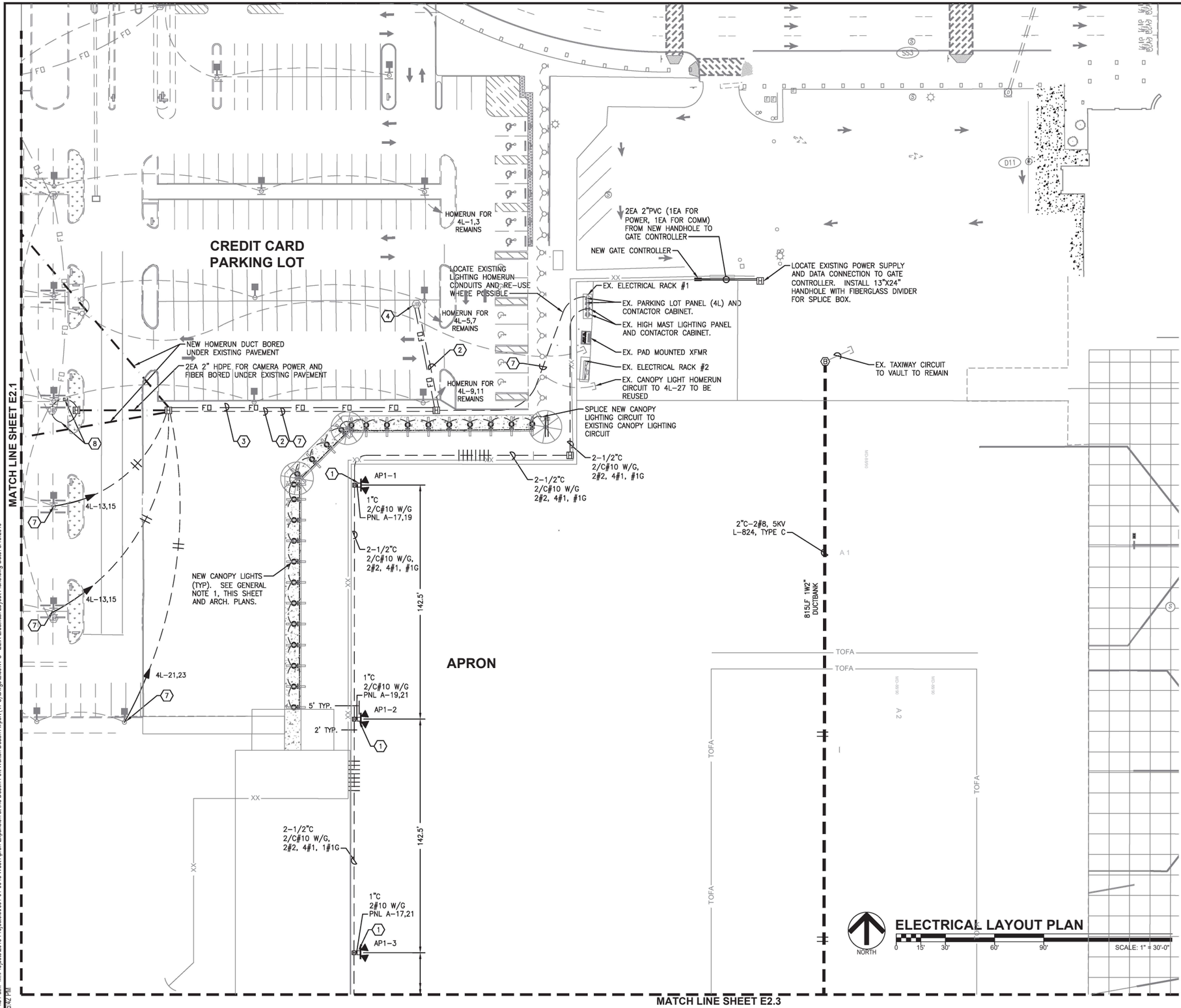

ELECTRICAL LAYOUT PLAN

File Path: M:\Projects\2018 Projects\00591-01-0618 West Apron Expansion at the Destin-Fort Walton Beach Airport (VPS)\Dwgs\Elec\VPS - E2.X Electrical Layout Plans.dwg Date: 5/16/2019 8:42 PM

OHMEGA
The Ohmega Group, Inc. | Be Brilliant.
Consulting ■ Engineers
1756 SILVER STREET, JACKSONVILLE, FL 32206
T : 904 807 6512 | WWW.OHMEGAGROUP.COM
FLORIDA COA NO. 25911

GENERAL NOTES

1. ALL CANOPY LIGHTING CIRCUITS TO BE 2#12, 1#12G, 3/4" CONDUIT UNLESS NOTED OTHERWISE.
2. CIRCUITS SHALL BE RAN AS SHOWN, IN THE EVENT THEY ARE CIRCUITED DIFFERENTLY, VOLTAGE DROP CALCULATIONS SHALL BE PERFORMED NOT TO EXCEED 3%.

KEYED NOTES

1. CONSTRUCT NEW FOUNDATION FOR LIGHTING (SEE S1.01). FURNISH AND INSTALL NEW HIGH MAST LIGHT POLE AND FIXTURES (SEE E5.1 AND S1.1).
2. EXTEND EXISTING CAMERA POWER CONDUCTORS AND GROUND FROM EXISTING PULLBOX. PROVIDE 2#6, 1#10GND AS REQUIRED. SPLICE TO EXISTING POWER CIRCUIT.
3. PROVIDE NEW 6-STRAND MMFO CABLE FROM EXISTING PATCH PANEL IN EXISTING COMMUNICATIONS FIELD CABINET TO EXISTING PATCH PANEL IN EXISTING POLE MOUNTED CABINET.
4. INSTALL RELOCATED 24"X24"X12" SWITCH BOX ON LIGHT POLE, 6' ABOVE GRADE. PROVIDE NEW CAT-6 CABLE FROM THE SWITCHBOX TO EXISTING CAMERA MOUNTED ON THIS POLE. PROVIDE 2" CONDUIT FOR FIBER. TERMINATE 6 STRANDS MMFO CABLE ENTERING SWITCH CABINET WITH SPIDER AND ST FO CONNECTOR PIG TAILS.
7. PROVIDE NEW LIGHT CIRCUIT HOMERUN(S) TO REPLACE THE DEMOLISHED HOMERUN(S), 1"C-2#10,1#10G. INTERCEPT EXISTING HOMERUN CONDUITS EXTENDING FROM PAVEMENT TO REMAIN AND RE-ROUTE THEM TO NEW HANDHOLE SHOWN.
8. CUT EXISTING ASPHALT AND LOCATE CONDUITS INTO JUNCTION BOX. COUPLE NEW CONDUITS FOR POWER AND FIBER FROM THE HANDHOLE TO THE EXISTING CONDUITS ENTERING THE JUNCTION BOX. PATCH & REPAIR ASPHALT, CURB AND GRASS AS NECESSARY.

FLY VPS
DESTIN - FORT WALTON BEACH AIRPORT

OKALOOSA COUNTY

INFRASTRUCTURE CONSULTING & ENGINEERING
5550 WEST IDLEWILD AVE. SUITE 102
TAMPA, FLORIDA 33634 (813) 330-2701
CERTIFICATE OF AUTHORIZATION NO.: 30862

Project Name:
CONSTRUCT WEST APRON AND INFRASTRUCTURE AT VPS

Designer:	Checked by:
BPR	MAM
Technician:	TOG Proj. No.:
BPR	00591-01-0618

Engineer of Record:

MARK A. MORLEY LICENSE No. 59813 STATE OF FLORIDA 5-16-19 PROFESSIONAL ENGINEER

Notes:

REVISIONS

No.	Description	Date	By

Drawing Name:
ELECTRICAL LAYOUT PLAN

FAA A.I.P. Project No.:
3-12-0081-029-2018

FDOT Project No.:

Date:	Sheet Number:
MAY 2019	E2.2

MATCH LINE SHEET E2.2

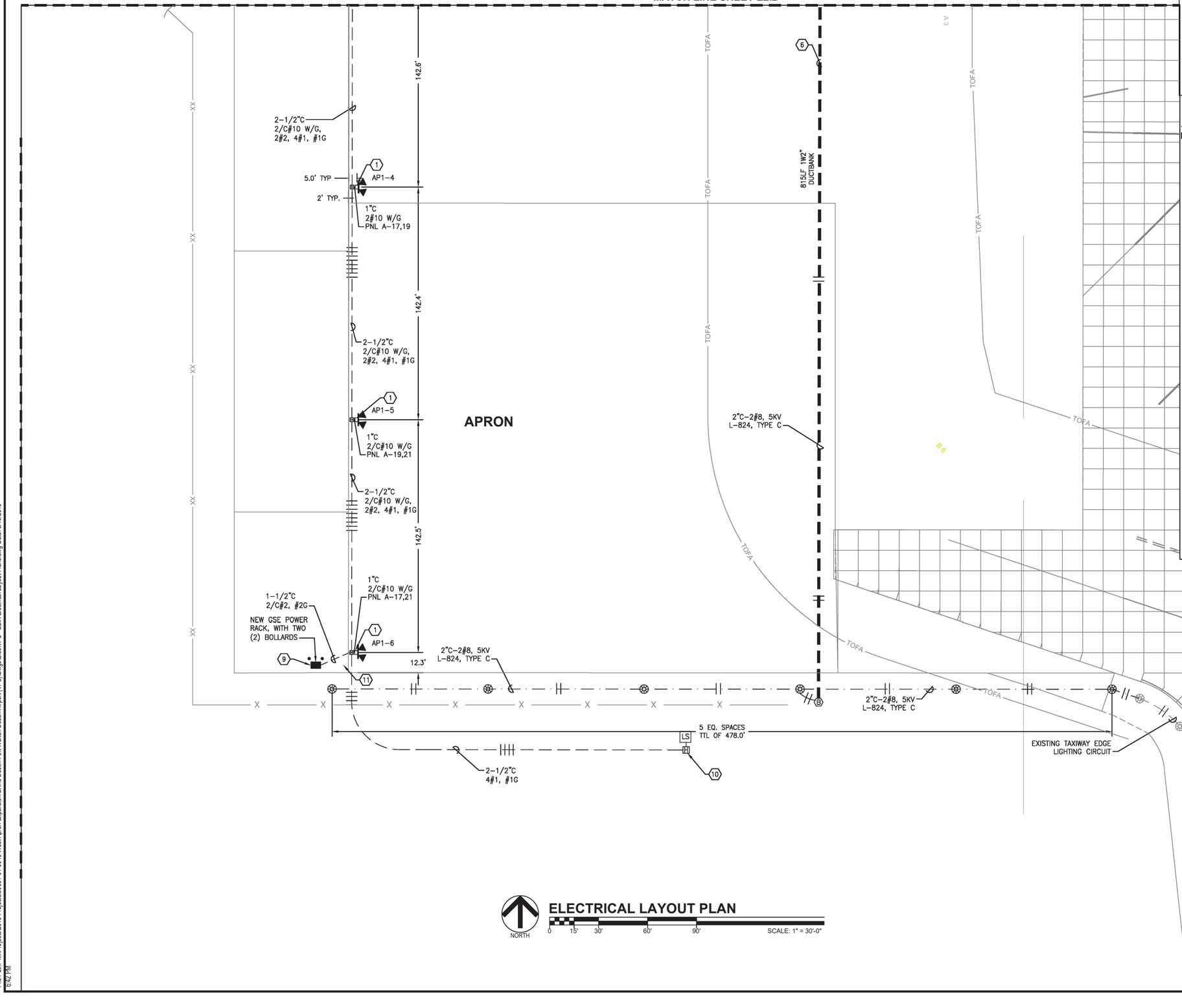

NORTH

ELECTRICAL LAYOUT PLAN

0 15' 30' 60' 90' SCALE: 1" = 30'-0"

KEYED NOTES

1. CONSTRUCT NEW FOUNDATION FOR LIGHTING (SEE S1.01). FURNISH AND INSTALL NEW HIGH MAST LIGHT POLE AND FIXTURES (SEE E5.1 AND S1.1).
5. PROPOSED TAXIWAY EDGE LIGHT, BASE MOUNTED. SEE DETAIL ON EX.X. TYPICAL.
6. PROPOSED DIRECT BURIED 2" PVC WITH 2#8 5KV, TYPE C, L-824 AIRFIELD LIGHTING CABLES. TYPICAL.
9. INTEGRAL TRANSFORMER AND LOAD CENTER MOUNTED TO LIGHT POLE, 10KVA, 480-240/120V, 1PH, WITH PRIMARY AND SECONDARY CIRCUIT BREAKERS, MINIMUM 10 SPACES, IN NEMA 4X ENCLOSURE, WITH TVSS (100KA/PH, 600V, UL 1449 TYPE 2); INCLUDING ONE DUPLEX 120V/20A RECEPTACLE AND TWO 240V/30A RECEPTACLES (NEMA L6-30) - EXTERNALLY MOUNT RECEPTACLE WITH WEATHERPROOF COVERS. COORDINATE 30A RECEPTACLE CONFIGURATION WITH EXISTING EQUIPMENT.
10. PROVIDE 2" PVC BELOW GRADE, AND 2" RGS ABOVE GRADE TO NEW LIFT STATION PANEL. TERMINATE SUPPLY CABLES AT LIFT STATION. SEE CIVIL PLANS.
11. COORDINATE LOCATION OF HANDHOLE, LIGHT POLE GROUND RING AND GSE POWER RACK WITH NEW SANITARY SEWER SYSTEM. HANDHOLE AND GSE POWER RACK MAY BE RELOCATED TO ACCOMMODATE. PO.E FOUNDATION MUST REMAIN IN LOCATION INDICATED.

OHMEGA
The Ohmega Group, Inc. | Be Brilliant.
Consulting ■ Engineers
1756 SILVER STREET, JACKSONVILLE, FL 32206
T : 904 807 6512 | WWW.OHMEGAGROUP.COM
FLORIDA COA NO. 25911

FLY VPS
DESTIN - FORT WALTON BEACH AIRPORT

OKALOOSA COUNTY

INFRASTRUCTURE
CONSULTING & ENGINEERING
5550 WEST IDLEWILD AVE. SUITE 102
TAMPA, FLORIDA 33634 (813) 330-2701
CERTIFICATE OF AUTHORIZATION NO.: 30862

Project Name:
CONSTRUCT WEST APRON AND INFRASTRUCTURE AT VPS

Designer:	Checked by:
BPR	MAM
Technician:	TOG Proj. No.:
BPR	00591-01-0618

Engineer of Record:

MARK A. MORLEY LICENSE No. 59813 STATE OF FLORIDA PROFESSIONAL ENGINEER
Mark A. Morley
2-16-19

Notes:

REVISIONS

No.	Description	Date	By

Drawing Name:
ELECTRICAL LAYOUT PLAN

FAA A.I.P. Project No.:
3-12-0081-029-2018

FDOT Project No.:

Date:	Sheet Number:
MAY 2019	E2.3

File Path: M:\Projects\2018 Projects\00591-01-0618 West Apron Expansion at the Destin-Fort Walton Beach Airport (VPS)\Dwgs\Elec\VPS - E2.X Electrical Layout Plans.dwg Date: 5/16/2019 6:42 PM

LIGHTING CALCULATION SUMMMARY

AREA	AVERAGE FOOTCANDLES	MAXIMUM FOOTCANDLES	MINIMUM FOOTCANDLES	AVERAGE/MINIMUM FOOTCANDLES	MAXIMUM/MINIMUM FOOTCANDLES
COMPLETE APRON (HORIZONTAL)	3.44*	7.3	0.8	4.3:1	9.1:1
APRON (VERTICAL)	5.01	9.5*	2.0	2.5:1	4.8:1

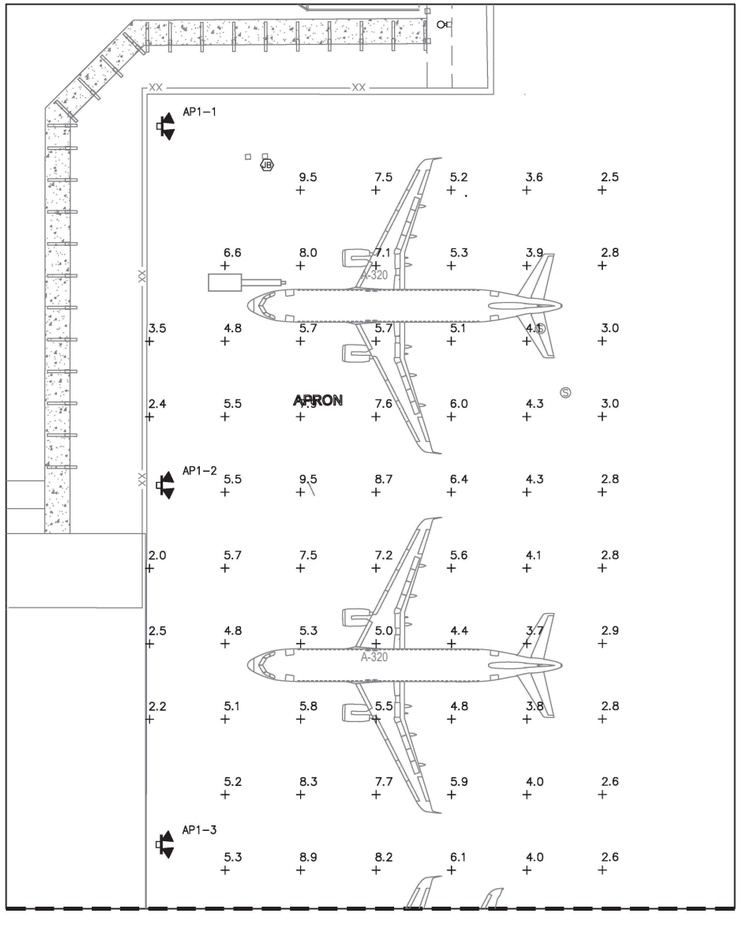

NORTH

ELECTRICAL SITE PHOTOMETRIC PLAN

0 15' 30' 60' 90' SCALE: 1" = 30'-0"

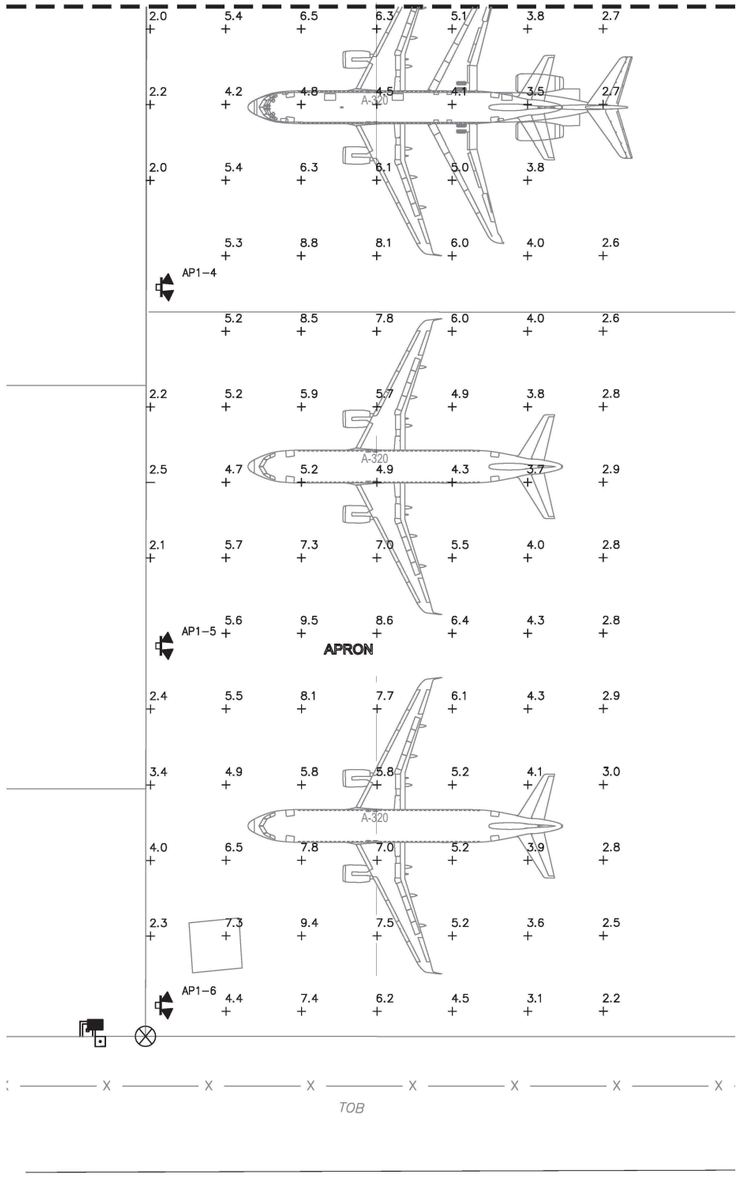

NORTH

ELECTRICAL SITE PHOTOMETRIC PLAN

0 15' 30' 60' 90' SCALE: 1" = 30'-0"

OHMEGA
The Ohmega Group, Inc. | Be Brilliant.
Consulting ■ Engineers
1756 SILVER STREET, JACKSONVILLE, FL 32206
T : 904 807 6512 | WWW.OHMEGAGROUP.COM
FLORIDA COA NO. 25911

FLY VPS

DESTIN - FORT WALTON BEACH AIRPORT

OKALOOSA COUNTY

INFRASTRUCTURE
CONSULTING & ENGINEERING
5550 WEST IDLEWILD AVE. SUITE 102
TAMPA, FLORIDA 33634 (813) 330-2701
CERTIFICATE OF AUTHORIZATION NO.: 30862

Project Name:
CONSTRUCT WEST APRON AND INFRASTRUCTURE AT VPS

Designer:	Checked by:
BPR	MAM
Technician:	TOG Proj. No.:
BPR	00591-01-0618

Engineer of Record:

MARK A. MORLEY LICENSE No. 59813 STATE OF FLORIDA PROFESSIONAL ENGINEER 12-16-19

Notes:

REVISIONS

No.	Description	Date	By

Drawing Name:
HIGH MAST PHOTOMETRICS

FAA A.I.P. Project No.:
3-12-0081-029-2018

FDOT Project No.:

Date:	Sheet Number:
MAY 2019	E3.1

File Path: M:\Projects\2018 Projects\00591-01-0618 West Apron Expansion at the Destin-Fort Walton Beach Airport (VPS)\Dwgs\Elec\VPS - E3.1 High Mast Photometrics.dwg Date: 5/16/2019 6:45 PM

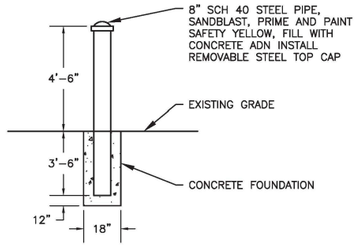

3 BOLLARD DETAIL

SCALE: NONE

PANELBOARD: A | FULLY RATED AIC: 65,000 | SYSTEM VOLTS: 480 Y/277 V, 3 PH, 4W
LOCATION: POWER STAND | MAX VOLTAGE: 480 | MAIN CIRCUIT BREAKER: 225 AMP
MOUNTING: SURFACE | ENCL: NEMA 4X | BUS SIZE: 225 AMP

CIRCUIT NO	AMP	P	VA LTS.	VA RECEP.	VA OTHER	DESCRIPTION	VOLT AMP PH A	VOLT AMP PH B	VOLT AMP PH C	DESCRIPTION	VA LTS.	VA RECEP.	VA OTHER	P	CIRCUIT AMP	CIRCUIT NO
1							19,400			PANEL 4L	19,400			3	100	2
3								12,900		|	12,900			|	|	4
5									15,500	|	15,500			|	|	6
7	20	1				SPARE	5,000			**GSE LOAD CENTER**			**5,000**	**2**	**30**	8
9	20	1				SPARE		5,000		|			**5,000**	|	|	10
11									0	SPARE				1	20	12
13							0									14
15								0								16
17	**20**	**3**	**2,880**			**NEW HIGH MAST**			16,880	**LIFT STATION**			**14,000**	**3**	**100**	18
19	|	|	**2,880**			|	16,880			|			**14,000**	|	|	20
21	|	|	**2,880**			|		16,880		|			**14,000**	|	|	22
23	30	3			9,600	PANEL			16,600	FUEL FARM			7,000	3	40	24
25	|	|			9,600	|	16,600					7,000	|	|	26
27	|	|			9,600	|		16,600	|			7,000	|	|	28
29									0							30
CONNECTED LOADS:			LTS: 56,440						RECEP: 0				OTHER: 101,800			
							57,880	51,380	48,980							
						VARIATION FROM BALANCE	10%	-3%	-7%	NOTES						
						GRAND TOTAL (CONNECTED LOAD)	158,240									
						CONNECTED LOAD /BUS (IF BALANCED)	52,747									
						CONNECTED AMPS	191									
						DEMAND LOAD (VA)	146,900									
						DEMAND AMPS	177									

PANELBOARD 'A' NOTES:
1. REUSE EXISTING HIGH MAST LIGHTING CIRCUIT BREAKER AND LIGHTING CONTACTOR FOR NEW HIGH MAST LIGHTING CIRCUIT. REPLACE EXISTING HIGH MAST LIGHTING CABLES WITH NEW CABLES, REUSING EXISTING CONDUIT AT THE ELECTRIC RACK.
2. FURNISH AND INSTALL NEW RGS CONDUIT FOR LIFT STATION CONDUIT FROM PANELBOARD A TO BELOW GRADE. USE SCH 40 PVC BELOW GRADE. FURNISH AND INSTALL NEW 100A/3P CIRCUIT BREAKER FOR LIFT STATION AS SHOWN.

PANELBOARD: 4L | FULLY RATED AIC: | SYSTEM VOLTS: 480 Y/277 V, 3 PH, 4W
LOCATION: POWER STAND | MAX VOLTAGE: 480 | MAIN CIRCUIT BREAKER: 100 AMP
MOUNTING: SURFACE | ENCL: NEMA 3R STAINLESS | BUS SIZE: 100 AMP

CIRCUIT NO	AMP	P	VA LTS.	VA RECEP.	VA OTHER	DESCRIPTION	VOLT AMP PH A	VOLT AMP PH B	VOLT AMP PH C	DESCRIPTION	VA LTS.	VA RECEP.	VA OTHER	P	CIRCUIT AMP	CIRCUIT NO
1	20	2	**775**			POLE LIGHTS	3,275			POWER CENTER 2PC1			2,500	2	15	2
3	|	|	**775**			|		3,275		|			2,500	|	|	4
5	20	2	**775**			POLE LIGHTS			8,275	POWER CENTER 2PC2			7,500	2	40	6
7	|	|	**775**			|	8,275			|			7,500	|	|	8
9	20	2	**775**			POLE LIGHTS		1,690		**POLE LIGHTS**			**915**	2	20	10
11	|	|	**775**			|			1,690	|			**915**	|	|	12
13	20	2	**930**			POLE LIGHTS	1,845			**POLE LIGHTS**			**915**	2	20	14
15	|	|	**930**			|		1,845		|			**915**	|	|	16
17	20	2	**1,007**			POLE LIGHTS			1,007	SPARE				1	20	18
19	|	|	**1,007**			|	1,207			TVSS			200	3	30	20
21	20	2	**1,360**			POLE LIGHTS		1,560		|			200	|	|	22
23	|	|	**1,360**			|			1,560	|			200	|	|	24
25	20	1	1,500			CANOPY LIGHTS	4,600			IRRIGATION PUMP CONTROLLER			3,100	3	20	26
27	20	1	1,700			CANOPY LIGHTS		4,600					3,100	|	|	28
29	20	1			100	CONTROL CIRCUIT			3,200	|			3,100	|	|	30
CONNECTED LOADS:			LTS: 14,444						RECEP: 0				OTHER: 33,660			
							19,202	13,170	15,732							
						VARIATION FROM BALANCE	20%	-16%	-2%	NOTES						
						GRAND TOTAL (CONNECTED LOAD)	48,104									
						CONNECTED LOAD /BUS (IF BALANCED)	16,035									
						CONNECTED AMPS	58									
						DEMAND LOAD (VA)	43,300									
						DEMAND AMPS	52									

PANELBOARD '4L' NOTES:
1. NEW CREDIT CARD PARKING LOT LIGHTING CIRCUITS ARE ADDED TO THE END OF EXISTING CIRCUITS. NO CHANGES ARE REQUIRED IN THE PANELBOARD. INCREASED LIGHTING LOADS ARE INDICATED IN BOLD.

4 PANEL SCHEDULES

SCALE: NONE

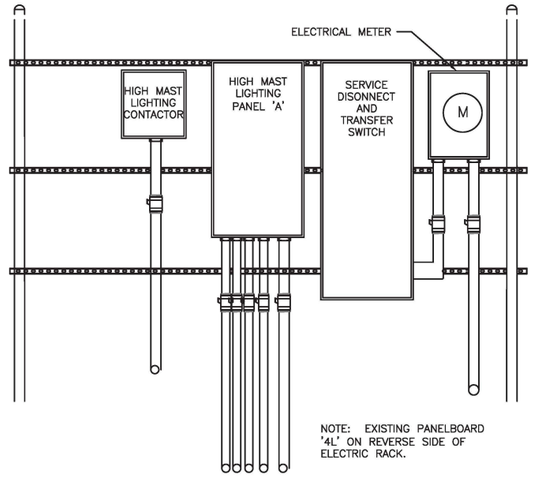

EXISTING ELECTRIAL RACK #1
(VIEW PROVIDED FOR REFERENCE ONLY)

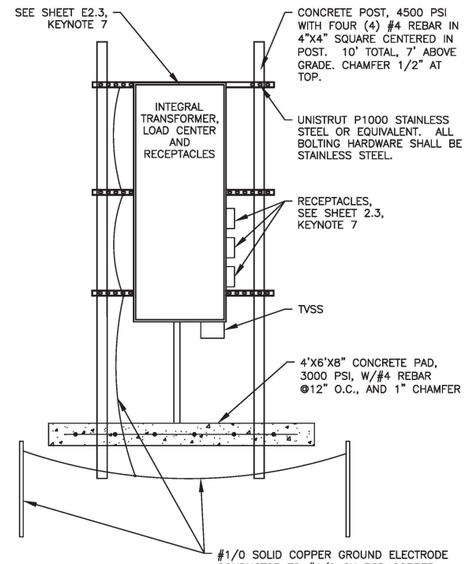

NEW GSE POWER RACK
NEAR LIGHT POLE AP1-6

1 ELECTRICAL RACK #1 & GSE POWER RACK ELEVATION VIEWS

SCALE: NONE

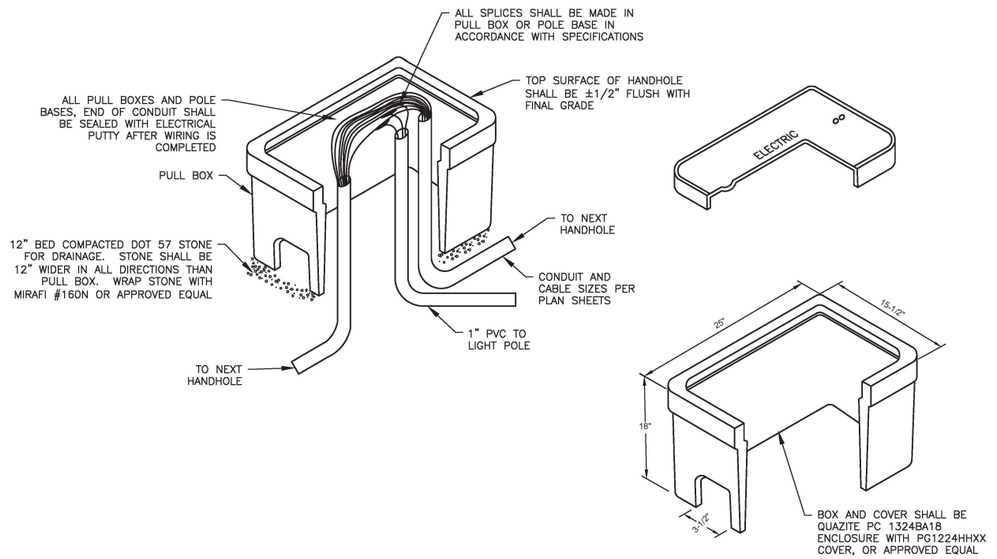

2 HANDHOLE

SCALE: NONE

OHMEGA
The Ohmega Group, Inc. | Be Brilliant.
Consulting ■ Engineers
1756 SILVER STREET, JACKSONVILLE, FL 32206
T : 904 807 6512 | WWW.OHMEGAGROUP.COM
FLORIDA COA NO. 25911

FLY VPS
DESTIN - FORT WALTON BEACH AIRPORT

OKALOOSA COUNTY

INFRASTRUCTURE CONSULTING & ENGINEERING
5550 WEST IDLEWILD AVE. SUITE 102
TAMPA, FLORIDA 33634 (813) 330-2701
CERTIFICATE OF AUTHORIZATION NO.: 30862

Project Name:
CONSTRUCT WEST APRON AND INFRASTRUCTURE AT VPS

Designer:	Checked by:
BPR	MAM
Technician:	TOG Proj. No.:
BPR	00591-01-0618

Engineer of Record:

MARK A. MORLEY LICENSE No. 59813 STATE OF FLORIDA PROFESSIONAL ENGINEER
05-16-19

Notes:

REVISIONS

No.	Description	Date	By

Drawing Name:
ELECTRICAL DETAILS

FAA A.I.P. Project No.:
3-12-0081-029-2018

FDOT Project No.:

Date:	Sheet Number:
MAY 2019	E4.1

File Path: M:\Projects\2018 Projects\00591-01-0618 West Apron Expansion at the Destin-Fort Walton Beach Airport (VPS)\Dwgs\Elec\VPS - E4.1 Electrical Details.dwg Date: 5/16/2019 6:46 PM

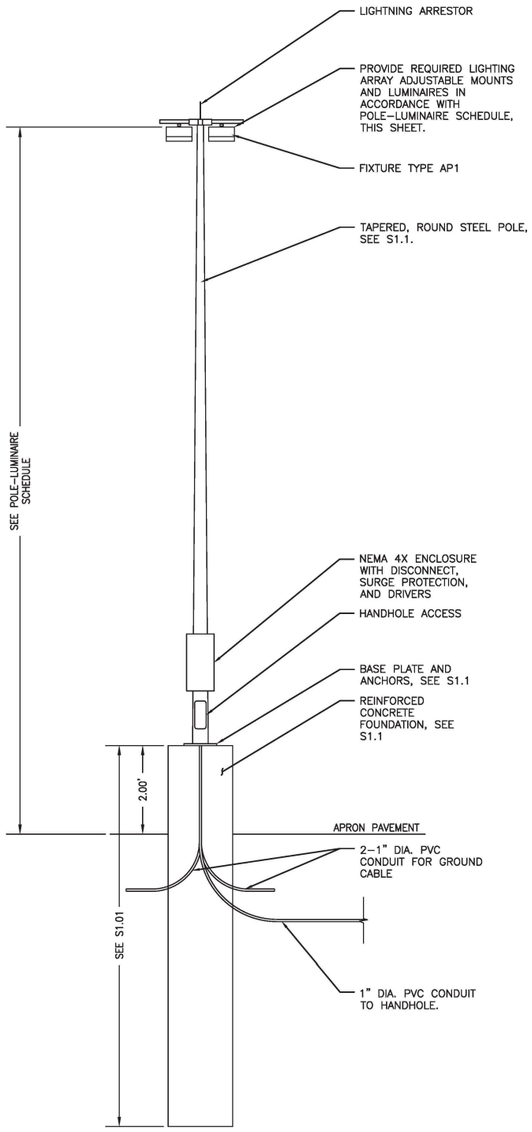

3 HIGH MAST POLE & LUMINAIRE DETAIL - TYPE 'AP1'

SCALE: NONE

NOTE: CONCRETE FOR THE FOUNDATION SHALL HAVE A MINIMUM 28 DAY COMPRESSIVE STRENGTH OF 3000 PSI. A CIRCULAR TUBE SHALL BE USED FOR BOTH CIRCULAR SECTIONS. HAND RUB FINISH OF CONCRETE ABOVE GRADE. REINFORCING BARS SHALL BE ASTM A615, GRADE 60. FABRICATION AND PLACEMENT SHALL COMPLY WITH THE CRSI MANUAL OF STANDARD PRACTICE. PROVIDE SUPPORTS FOR ALL REINFORCING STEEL AS RECOMMENDED BY CRSI. THE REINFORCING STEEL SHALL BE SECURELY HELD SUCH THAT IT WILL NOT BE DISPLACED DURING PLACEMENT OF CONCRETE. MANUFACTURER OF LIGHT POLES SHALL SUPPLY APPROVED ANCHOR BOLTS AND THESE SHALL BE INSTALLED ACCORDING TO MANUFACTURER'S INSTRUCTIONS USING THE MANUFACTURER'S SUPPLIED TEMPLATE. ANCHOR BOLTS ARE TO BE BONDED TO THE REINFORCING STEEL IN MULTIPLE LOCATIONS WITH WIRE TIES. ALL POLES SHALL BE INSTALLED PLUMB. ALL SQUARE FOUNDATION SECTIONS SHALL BE FORMED SQUARE TO PARKING LOT. LEVEL BASE USING LEVELING NUTS AND GROUT. AT LIGHT POLES, LEAVE ENOUGH SLACK TO PULL WIRE CONNECTIONS AND FUSE HOLDER OUT OF HAND HOLE.

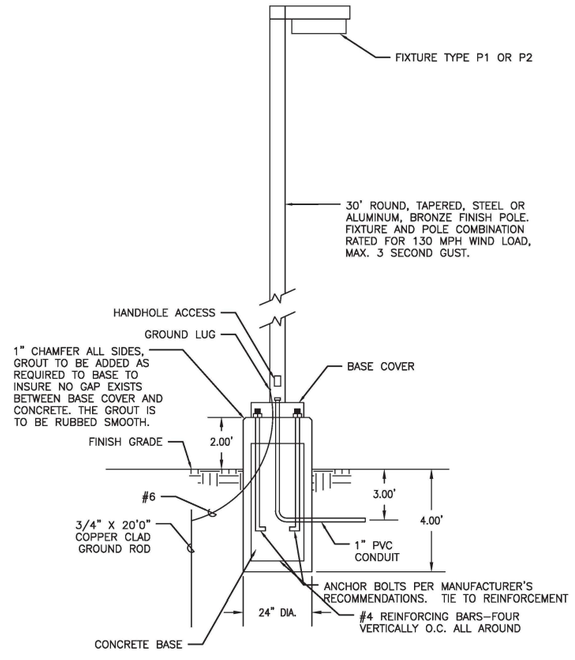

2 PARKING LOT LIGHT POLE DETAIL - TYPE 'P1','P2' & 'P3'

SCALE: NONE

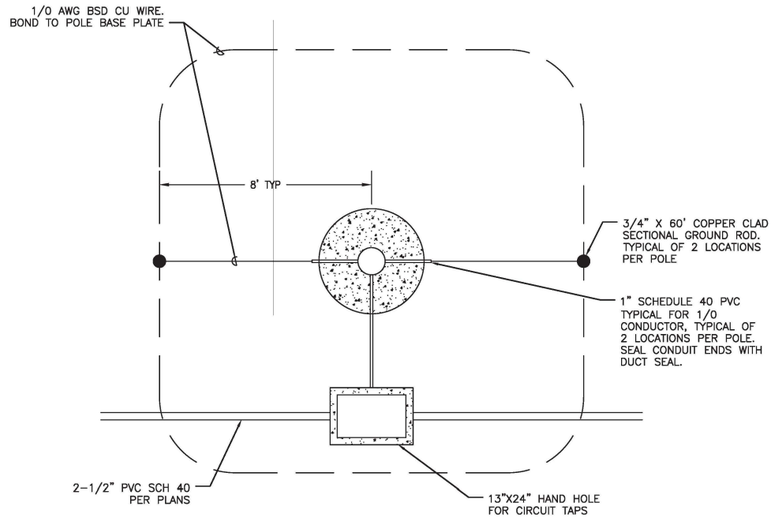

1 HIGH MAST POLE GROUNDING DETAILS

SCALE: NONE

POLE-LUMINAIRE SCHEDULE

POLE		LUMINAIRE						
FIXT TYPE	SIZE	MOUNTING HT.	LUMINAIRE TYPE	LUMENS/ FIXT.	COLOR TEMP.	QTY/ POLE	WATTS/ POLE	VOLTS
AP1	70'	72'	TLC–LED–600	55,760	5700K	2	1,440	480
AP2	60'	60'	AF–750–6–57–BLK–AM–Z	67,091	4000K	1	741.3	480
P1	30'	32'	DSX1 LED P7 TFTM	20,996	5000K	1	183	480
P2	30'	32'	DSX1 LED P7 BLC	17,214	5000K	1	183	480
P3	30'	32'	DSX1 LED P7 BLC	17,214	5000K	2	366	480
P4	30'	32'	DSX1 LED P9 T5W	26,406	5000K	1	241	480

NOTES:
1. MUSCO, LITHONIA AND EATON LIGHTING FIXTURE USED AS BASIS OF DESIGN. FIXTURE WITH EQUIVALENT LUMEN OUTPUT AND ENERGY USAGE ARE ACCEPTABLE UPON APPROVAL OF THE ENGINEER.
2. FIXTURE WP IS WALL–MOUNT INSTALLED AT SHUTTLE STOPS. MATCH FINISH OF OTHER SIMILAR FIXTURES ON SITE.

5 LUMINAIRE SCHEDULE

SCALE: NONE

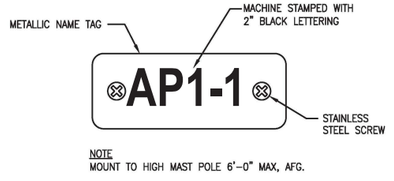

NOTE
MOUNT TO HIGH MAST POLE 6'–0" MAX, AFG.

4 POLE I.D. TAG DETAIL

SCALE: NONE

OHMEGA
The Ohmega Group, Inc. | Be Brilliant.
Consulting ■ Engineers
1756 SILVER STREET, JACKSONVILLE, FL 32206
T : 904 807 6512 | WWW.OHMEGAGROUP.COM
FLORIDA COA NO. 25911

FLY VPS
DESTIN - FORT WALTON BEACH AIRPORT

OKALOOSA COUNTY

INFRASTRUCTURE
CONSULTING & ENGINEERING
5550 WEST IDLEWILD AVE. SUITE 102
TAMPA, FLORIDA 33634 (813) 330-2701
CERTIFICATE OF AUTHORIZATION NO.: 30862

Project Name:
CONSTRUCT WEST APRON AND INFRASTRUCTURE AT VPS

Designer:	Checked by:
BPR	MAM
Technician:	TOG Proj. No.:
BPR	00591-01-0618

Engineer of Record:

MARK A. MORLEY LICENSE No. 59813 STATE OF FLORIDA PROFESSIONAL ENGINEER 5-16-19

Notes:

REVISIONS

No.	Description	Date	By

Drawing Name:
LIGHT POLE DETAILS

FAA A.I.P. Project No.:
3-12-0081-029-2018

FDOT Project No.:

Date:	Sheet Number:
MAY 2019	E5.1

File Path: M:\Projects\2018 Projects\00591-01-0618 West Apron Expansion at the Destin-Fort Walton Beach Airport (VPS)\Dwgs\Elec\VPS - E5.1 Light Pole Details.dwg Date: 5/16/2019 6:47 PM

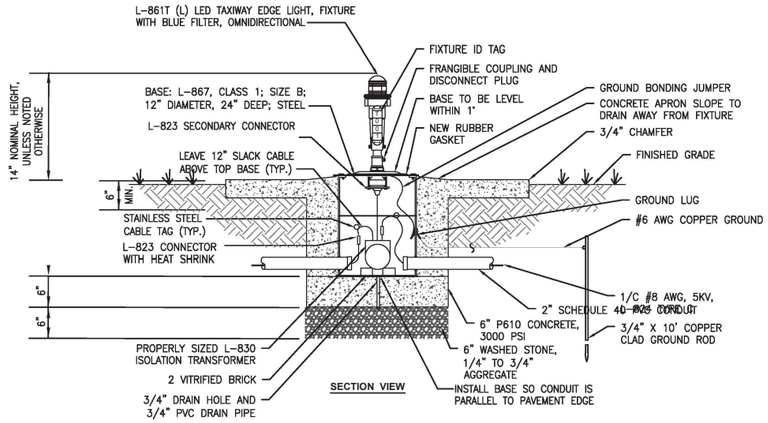

3 ELEVATED EDGE LIGHT FIXTURE IN TURF AREA

SCALE: NONE

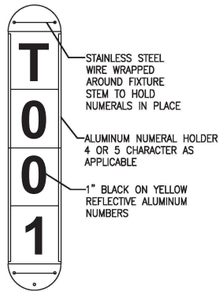

LIGHT FIXTURE IDENTIFICATION TAG DETAIL

1. THE CONTRACTOR SHALL FURNISH AND INSTALL NEW NUMBER TAGS ON ALL NEW OR RELOCATED LIGHTS. THE TAGS SHALL BE REFLECTIVE AND SHALL BE "E-Z TAG" AS MANUFACTURED BY ALMATEK, OR APPROVED EQUAL. EACH TAG SHALL BE A VERTICAL CONFIGURATION, CONSISTING OF A HOLDER AND NUMERALS. (NO SEPARATE PAY ITEM)
2. THE NUMBER TAG SHALL CONSIST OF ONE LETTER (R OR T) PROCEEDED BY THREE OR FOUR NUMBERS. THE NUMBER SEQUENCE SHALL BE AS DEFINED BY OWNER.

2 FIXTURE ID DETAIL

SCALE: NONE

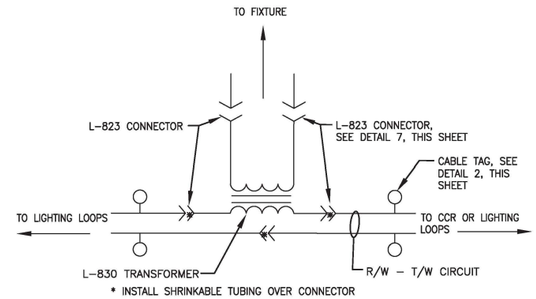

* INSTALL SHRINKABLE TUBING OVER CONNECTOR

DO NOT USE HEAT SHRINK TUBING ON THE SECONDARY OF THE L-830 TRANSFORMER WHEN CONNECTED TO AN ELEVATED FIXTURE.

1 LIGHTING CONNECTION SCHEMATIC

SCALE: NONE

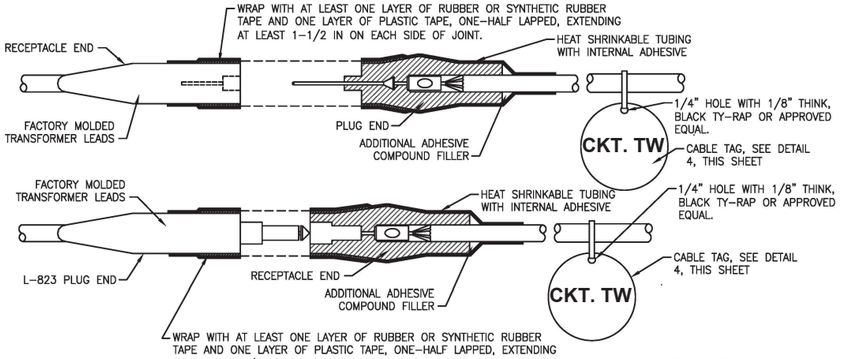

TRANSFORMER SPLICES

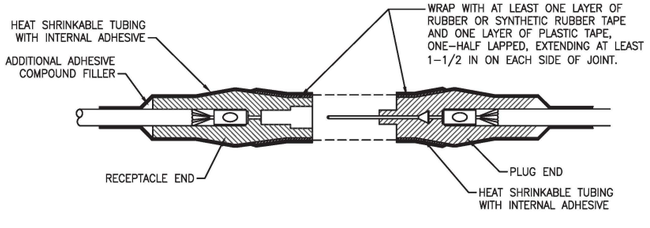

CABLE SPLICES

PLUG CONNECTOR NOTES

1. CONTRACTOR SHALL PROVIDE CABLE CIRCUIT IDENTIFICATION MARKERS ATTACHED TO BOTH SIDES OF EACH CABLE CONNECTION.
2. CABLE IDENTIFICATION MARKERS SHALL BE ATTACHED WITH TY-RAP IDENTIFICATION CABLE TIES, MANUFACTURED BY THOMAS & BETTS, OR APPROVED EQUIVALENT.
3. THE CABLE SHALL THOROUGHLY BE CLEANED PRIOR TO THE INSTALLATION OF THE L-823 CONNECTOR KIT.
4. INSTALLATION OF THE PIN/RECEPTACLE SHALL BE COMPLETED WITH "CRIMPING" TOOL SUPPLIED OR RECOMMENDED BY THE MANUFACTURER AND DESIGNED FOR THIS SPECIFIC PURPOSE. TWO CRIMPING TOOLS SHALL BE TURNED OVER TO THE AIRPORT UPON COMPLETION OF THE PROJECT.
5. ATTACH EACH CABLE TIE ENOUGH TO HOLD IN PLACE WITHOUT COMPRESSING HOUSING. TRIM OFF EXCESS CABLE TIE.
6. INSTALLATION OF L-823 AND HEAT SHRINKABLE TUBING SHALL BE IN STRICT CONFORMANCE WITH MANUFACTURERS REQUIREMENTS.
7. THE HEAT SHRINK TUBING SHALL BE FACTORY PRESOAKED WITH SEALANT. HEAT SHRINK SHALL BE MANUFACTURED BY 3M, INC., PART NO. MDT-1100-BK48A OR APPROVED EQUAL.
8. CONTRACTOR SHALL USE SHRINKABLE TUBING. DIRECT FLAME HEATING OF TUBING WILL NOT BE ALLOWED. A HEAT GUN APPROVED BY THE MANUFACTURER MUST BE USED.

6 L-824 CABLE TRANSFORMER AND CABLE SPLICE DETAIL

SCALE: NONE

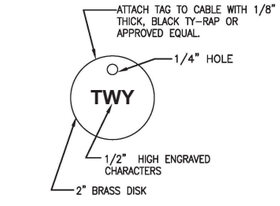

CABLE ID TAG

NOTE: COORDINATE NUMBERING METHOD WITH OWNER

5 CABLE TAG DETAIL

SCALE: NONE

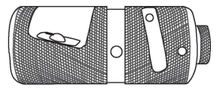

CABLE END STRIPPER/PENCILLER

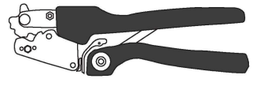

CRIMPING TOOL

CRIMPING TOOLS REQUIRED FOR ALL 5KV. L-824C CABLE CONNECTIONS TO L-823 CONNECTORS. CRIMPING TOLL SHALL BE FURNISHED AS RECOMMENDED BY THE L-823 CONNECTOR KIT MANUFACTURER

4 CABLE CONNECTOR TOOLS

SCALE: NONE

OHMEGA
The Ohmega Group, Inc. | Be Brilliant.
Consulting ■ Engineers
1756 SILVER STREET, JACKSONVILLE, FL 32206
T : 904 807 6512 | WWW.OHMEGAGROUP.COM
FLORIDA COA NO. 25911

FLY VPS

DESTIN - FORT WALTON BEACH AIRPORT

OKALOOSA COUNTY

INFRASTRUCTURE CONSULTING & ENGINEERING
5550 WEST IDLEWILD AVE. SUITE 102
TAMPA, FLORIDA 33634 (813) 330-2701
CERTIFICATE OF AUTHORIZATION NO.: 30862

Project Name:
CONSTRUCT WEST APRON AND INFRASTRUCTURE AT VPS

Designer:	Checked by:
BPR	MAM
Technician:	TOG Proj. No.:
BPR	00591-01-0618

Engineer of Record:

MARK A. MORLEY LICENSE No. 59813 STATE OF FLORIDA PROFESSIONAL ENGINEER
FE 16-16

Notes:

REVISIONS

No.	Description	Date	By

Drawing Name:
TAXIWAY FIXTURE DETAILS

FAA A.I.P. Project No.:
3-12-0081-029-2018

FDOT Project No.:

Date:	Sheet Number:
MAY 2019	E5.2

File Path: M:\Projects\2018 Projects\00591-01-0618 West Apron Expansion at the Destin-Fort Walton Beach Airport (VPS)\Dwgs\Elec\VPS - E5.2 Taxiway Fixture Details.dwg Date: 5/16/2019 6:46 PM

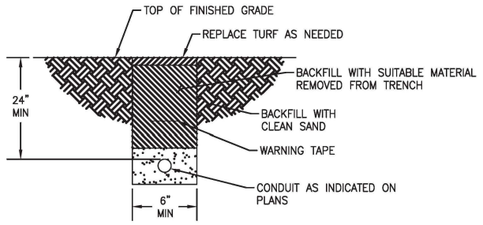

3 **DUCT IN NON-PAVED AREAS**
SCALE: NONE

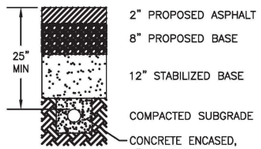

2 **DUCT UNDER PARKING LOT PAVEMENT**
SCALE: NONE

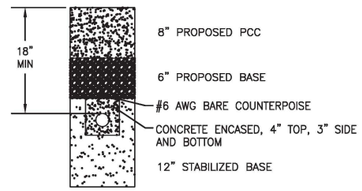

NOTE: COUNTERPOISE IS REQUIRED FOR AIRFIELD LIGHTING DUCT UNDER APRON PAVEMENT. COUNTERPOISE IS NOT REQUIRED FOR HIGH MAST LIGHTING CONDUIT.

1 **DUCT UNDER APRON PAVEMENT**
SCALE: NONE

DUCT BANK NOTES

1. THE #6 AWG BSD SOLID COPPER COUNTERPOISE SHALL BE CENTERED ON THE CONDUIT WHEN INSTALLED UNDER FULL STRENGTH PAVEMENT.
2. A PLASTIC, DETECTABLE NON-MAGNETIC 3" (MIN.) WIDE RED TAPE SHALL BE INSTALLED EIGHT INCHES (8") BELOW GRADE ABOVE ALL PORTIONS OF EXISTING UNDERGROUND UTILITIES EXPOSED FOR ANY REASONS. THE DETECTABLE TAPE SHALL BE OMITTED WHERE THE UNDERGROUND UTILITY IS UNDER AIRFIELD PAVEMENT.
3. ALL CONDUITS UNDER PAVEMENT SHALL BE ENCASED IN P-610 CONCRETE WITH NOT LESS THAN 3" OF COVER AT TOP, BOTTOM AND SIDES.
4. TRENCHED AREAS SHALL BE BACKFILLED AND COMPACTED AS SHOWN. NO SEPARATE PAYMENT SHALL BE MADE FOR RESTORING TURF.
5. THE CONTRACTOR SHALL BE RESPONSIBLE TO CONTACT THE APPROPRIATE UTILITY, AGENCY, ETC. PRIOR TO ANY EXCAVATION/CONSTRUCTION TO LOCATE THE UTILITY'S OR AGENCY'S UNDERGROUND CABLES, PIPE, CONDUITS, DUCT BANKS, ETC. REPLACEMENT OF EXISTING CABLES SHALL BE AT THE NO ADDITIONAL COST TO THE OWNER.
6. GROUND RODS SHALL BE INSTALLED AT NO MORE THAN 500' AND SHALL BE 3/4"x10'. GROUND RODS SHALL BE TESTED TO OBTAIN A NOT-TO-EXCEED 25 OHMS PRIOR TO CONNECTION WITH COUNTERPOISE WIRE AND 5 OHMS AFTER CONNECTION TO THE COUNTERPOISE.
7. BACKFILL UNDER TURF SHALL BE NATIVE MATERIAL COMPACTED PER P-152. BACKFILL UNDER PAVED AREAS SHALL BE FLOWABLE FILL PER P-153.
8. THE CONTRACTOR SHALL BE RESPONSIBLE TO PAY FOR AND OBTAIN ANY AND ALL PERMITS REQUIRED FOR DEWATERING.

5 **DUCT NOTES**
SCALE: NONE

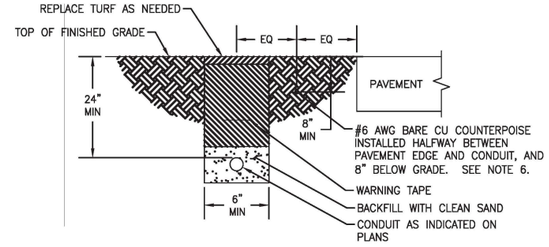

4 **DUCT IN NON-PAVED AREAS FOR AIRFIELD LIGHT CIRCUIT**
SCALE: NONE

OHMEGA
The Ohmega Group, Inc. | Be Brilliant.
Consulting ■ Engineers
1756 SILVER STREET, JACKSONVILLE, FL 32206
T : 904 807 6512 | WWW.OHMEGAGROUP.COM
FLORIDA COA NO. 25911

FLY VPS

DESTIN - FORT WALTON BEACH AIRPORT

OKALOOSA COUNTY

INFRASTRUCTURE
CONSULTING & ENGINEERING
5550 WEST IDLEWILD AVE. SUITE 102
TAMPA, FLORIDA 33634 (813) 330-2701
CERTIFICATE OF AUTHORIZATION NO.: 30862

Project Name:
CONSTRUCT WEST APRON AND INFRASTRUCTURE AT VPS

Designer:	Checked by:
BPR	MAM
Technician:	TOG Proj. No.:
BPR	00591-01-0618

Engineer of Record:

MARK A. MORLEY LICENSE No. 59813 STATE OF FLORIDA PROFESSIONAL ENGINEER
5-16-19

Notes:

REVISIONS

No.	Description	Date	By

Drawing Name:
DUCT BANK DETAILS

FAA A.I.P. Project No.:
3-12-0081-029-2018

FDOT Project No.:

Date:	Sheet Number:
MAY 2019	E5.3

File Path: M:\Projects\2018 Projects\00591-01-0618 West Apron Expansion at the Destin-Fort Walton Beach Airport (VPS)\Dwgs\Elec\VPS - E5.3 Duct Bank Details.dwg Date: 5/16/2019 6:48 PM

HIGHMAST LIGHTING NOTES:

1. High Mast materials:
   a. Pole: ASTM A1011 Grade 50, 55, 60 or 65 (Less than ") or ASTM A572 Grade 50,55, 60, or 65 (" and over) or ASTM A595 Grade A (55 ksi yield) or Grade B (60 ksi yield).
   b. Steel Plates: ASTM A709 Grade 36 or ASTM A36 .
   c. Weld Metal: E70XX
   d. Anchor Bolts: ASTM F1554 Grade 55 with ASTM A563, Grade A heavy-hex nuts and plate washer.
   e. Handhole: ASTM A709 Grade 36 or ASTM A36 Frame with ASTM A36 cover.
   f. Caps: ASTM A1011 Grade 50, 55, 60 or 65 or ASTM B209.
   g. Nut Covers: ASTM B26 (319-F)
   h. Stainless Steel Screws: AISI Type 316
2. Reinforcing steel: ASTM A615, Grade 60.
3. Concrete: Class IV (Drilled Shaft) with a minimum 4,000 psi compressive strength at 28 days for all environmental classifications.
4. Welding: American Welding Society Structural Welding Code (Steel) ANSI/AWS D/.1 Current edition).
5. Galvanization:
   a. Nuts, Bolts, Washers and Threaded Bars/Studs: ASTM F2329.
   b. Other items (Including Pole): ASTM A123
6. Hole diameters for anchor bolts: not greater than the bolt diameter plus 1/4".
7. Poles: Tapered with the diameter changing at a rate of 0.14 inch per foot with a minimum 16-sided pole shaft and maximum of two longitudinal seam welds. Circumferentially welded pole shaft butt splices and laminated pole shafts are not permitted. Longitudinal seam welds within 6 inches of pole to base must be complete penetration. Longitudinal seam welds at telescopic field joints must be complete penetration welds for the splice length plus 6 inches.
8. One hundred percent of full-penetration groove welds and a random 25 percent of partial penetration groove welds shall be inspected. Full-penetration groove weld inspection shall be performed by nondestructive methods of radiography or ultrasonics.
9. Furnish each pole with a 2"x4" (Max.) aluminum identification tag. Submit details for approval. Secure to pole with 0.124" stainless steel rivets or screws. Locate identification tag on the inside of pole and visible from handhole. Include the following information: Financial Project JD, Pole Mounting Height, Manufacturer's Name, Fy of Steel, and Base Wall Thickness.
10. Verify CSL access tubes will not interfere with anchor bolt installation before excavating the shaft. When CSL access tube locations conflict with anchor bolt locations, move the CSL access tube location +/- two inches along the inner circumference of the reinforcing cage. Notify the Engineer before excavating the shaft if the CSL access tube locations cannot be moved out of conflict with anchor bolt locations.

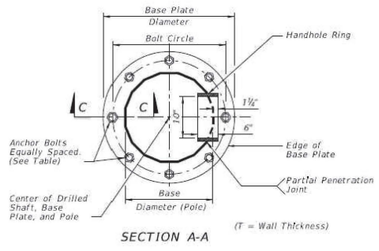

SECTION A-A

(T = Wall Thickness)

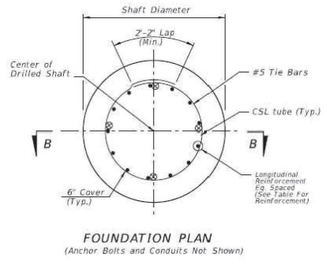

FOUNDATION PLAN

(Anchor Bolts and Conduits Not Shown)

FOR REFERENCE ONLY

THE DESIGNS PROVIDED FOR THE LIGHT POLE AND FOUNDATION ARE FOR THE PURPOSE OF DEVELOPING A BID PRICE.

THE DESIGN OF THE POLE, BASE PLATE AND FOUNDATION SHALL BE ACCOMPLISHED BY THE CONTRACTOR USING INFORMATION FROM THE LUMINAIRE, POLE AND LOWERING DEVICE MANUFACTURER. DESIGNS SHALL BE SIGNED AND SEAL BY A REGISTERED FLORIDA PROFESSIONAL ENGINEER.

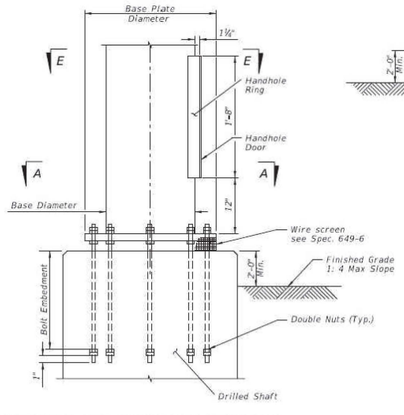

BASE PLATE AND ANCHORAGE ELEVATION

(Conduits Not Shown)

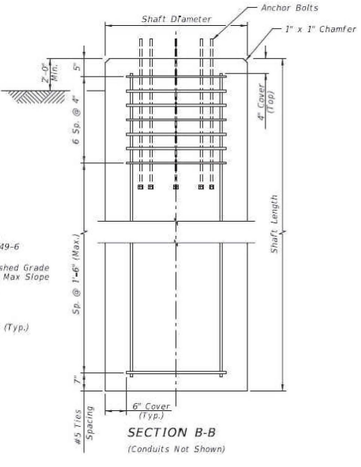

SECTION B-B

(Conduits Not Shown)

Shaft Design Table

Design Wind Speed	Pole Overall Height (ft)	Shaft Diameter	Shaft Length	Longitudinal Reinforcement
110 mph	80	4'-0"	13'-0"	14 - # 11
	100	4'-0"	15'-0"	14 - # 11
	120	4'-6"	16'-0"	16 - # 11
130 mph	80	4'-0"	14'-0"	14 - # 11
	100	4'-0"	16'-0"	14 - # 11
	120	4'-6"	18'-0"	16 - # 11
150 mph	80	4'-0"	16'-0"	14 - # 11
	100	4'-6"	17'-0"	16 - # 11
	120	5'-0"	20'-0"	18 - # 11

Base Plate and Bolts Design Table

Design Wind Speed	Pole Overall Height (ft)	Base Plate Diameter	Base Plate Thickness	Bolt Circle	No. Bolts	Bolt Diameter	Bolt Embedment
110 mph	80	30.0"	2.500"	23.0"	8	1.75"	38"
	100	33.5"	2.500"	26.5"	8	1.75"	42"
	120	36.0"	2.750"	29.0"	8	1.75"	45"
130 mph	80	30.0"	2.500"	23.0"	8	1.75"	43"
	100	34.0"	2.750"	27.0"	8	1.75"	50"
	120	41.0"	3.250"	33.0"	8	2.00"	52"
150 mph	80	32.0"	2.750"	25.0"	8	1.75"	49"
	100	37.0"	3.000"	29.0"	8	2.00"	53"
	120	46.0"	3.250"	37.0"	10	2.25"	57"

OHMEGA
The Ohmega Group, Inc. | Be Brilliant.
Consulting ■ Engineers
1756 SILVER STREET, JACKSONVILLE, FL 32206
T : 904 807 6512 | WWW.OHMEGAGROUP.COM
FLORIDA COA NO. 25911

FLY VPS

DESTIN - FORT WALTON BEACH AIRPORT

OKALOOSA COUNTY

INFRASTRUCTURE
CONSULTING & ENGINEERING
5550 WEST IDLEWILD AVE. SUITE 102
TAMPA, FLORIDA 33634 (813) 330-2701
CERTIFICATE OF AUTHORIZATION NO.: 30862

Project Name:

CONSTRUCT WEST APRON AND INFRASTRUCTURE AT VPS

Designer:	Checked by:
BPR	MAM
Technician:	TOG Proj. No.:
BPR	00591-01-0618

Engineer of Record:

MARK A. MORLEY LICENSE No. 59813 STATE OF FLORIDA PROFESSIONAL ENGINEER
5-16-19

Notes:

REVISIONS

No.	Description	Date	By

Drawing Name:

POLE FOUNDATION

FAA A.I.P. Project No.:

3-12-0081-029-2018

FDOT Project No.:

Date:	Sheet Number:
MAY 2019	S1.1

File Path: M:\Projects\2018 Projects\00591-01-0618 West Apron Expansion at the Destin-Fort Walton Beach Airport (VPS)\Dwgs\Struct\VPS - S1.01 Pole Foundation.dwg Date: 5/16/2019 6:49 PM